NZCAD
STEVE HENDERSON

Steve Henderson NZCAD Ltd

P R O J E C T S P E C I F I C A T I O N

Creighton

Wanaka

Issued for Tender/Consent

16-01

PROJECT OVERVIEW

Scope

New two level Residential home, Light timber frame on Ribraft ground floor. Hardies Linea weatherboard Cladding. Titan Board Features. Colorsteel Roofing and aluminium external windows and doors.

Address

City	Wanaka

Site Conditions

Wind Zone	H - High Wind Speed
Earthquake Zone	Zone 3
Exposure Zone	Zone B - Low
Snow Loading Zone	Zone N5

Related Parties

Engineer

Gridline Ltd, Warrick Weber, warrick@gridline.co.nz

TABLE OF CONTENTS

Preliminaries & General 5
Project Overview 5
Project Specifics 12
Siteworks 17
Site & Scope 17
Excavation & Siteworks 18
Drives, Paths & Paving 20
Landscaping 22
Concrete 23
Ribraft Concrete Floors 23
Carpentry 25
Workmanship & Materials 26
Timber Framing 37
LVL Engineered Framing 42
Thermakraft Underlay, DPM & DPC 44
Secura Flooring 48
James Hardie Pre-Cladding 50
Ecoply Bracing 52
Linea Weatherboard 53
James Hardie Titan Facade Panel 56
James Hardie Eaves & Soffits 58
James Hardie Villaboard Lining 61
GIB® Rondo® Metal Batten Systems 64
GIB® Plasterboard Sheets 67
Roofing 71
COLORSTEEL® 71
Aluminium Joinery 74
Aluminium Windows & Doors 74
Insulation 80
Thermal Insulation 80
Tiling 83
Workmanship 83
Materials 84
Painting & Decorating 86
General 86
Plumbing 90
Workmanship 91
Materials 93
Systems 94
Drainlaying 96
Workmanship 96
Elements 97
Electrical 99
Workmanship 100
Systems 102
Materials & Control 102
Elements 103
Interconnected Smoke Alarms 104
Appendix 106

Ribraft Floors 106
Codemark: Ribraft Floor Systems 106
Garage Door Install set-out 106
Metro Ambie-One Fire 106
Metro Eco-Flue Manual 106
Bowmac Blue Bolt 106
BRANZ Appraisal No.651 (2009) - Thermakraft Covertek 407 Fire Retardant Self-Supporting Roof Underlay 106
CodeMark Certificate of Conformity - Thermakraft Covertek 407 106
BRANZ Appraisal No.329 (2005) Supercourse 500 Damp-Proof Course & Concealed Flashing 106
Scyon Secura Flooring 106
BRANZ Appraisal No.611 (2011) - James Hardie Rigid Air Barriers 106
RAB Installation 106
BRANZ Appraisal No.447 (2010) - Scyon Linea Weatherboard Cavity Cladding 106
CodeMark Certificate of Conformity - James Hardie Linea Weatherboard Direct Fixed and Cavity Cladding 106
Linea Weatherboard 106
BRANZ Appraisal No.467 (2005) - Titan & Exotec Façade Panel Rainscreen 106
Titan Facade Panel 106
BRANZ Appraisal No.294 (2011) - GIB EzyBrace Systems 2011 106
BRANZ Appraisal No.427 (2007) - GIB Aqualine Wet Area Systems 106
Corrugate Product Profile 106
AVA Shower Base 106
Mapelastic GB 106
AVA 900x900 shower: Center waste-Hinged door 106
Optima HWC 106
Fire Alarm SA520 106

1 PRELIMINARIES & GENERAL

1.1 Project Overview

1.1.1 Contract Documents

Contract Documents

The Contract Documents are complementary and comprise this Specification, the accompanying drawings, the NBC (National Building Contract) together with Schedules as specified below, any written documentation clarifications issued during tendering/estimating, any manufacturer/supplier information issued with this Specification, any list of agreed Subcontractors, the contract establishment letter and any other relevant correspondence, and any Site Instructions or additional details or instructions issued as Variations. (The National Building Contract will be emailed upon request).

These Project Specific Conditions supersede the Standard Conditions where they are in conflict. Refer any ambiguity or apparent discrepancy within or between any Contract Documents to the Architect/Designer, whose interpretation shall be binding on all parties.

Ensure that all Trades are aware of all Conditions and that subcontract prices are accepted on this basis, and in a form acceptable to the Registered Master Builders Federation or the Certified Builders Association. Ensure that all persons engaged on the works are aware of all items in this specification and on the drawings that may in any way affect their section of the works.

1.1.2 Site

Site

Relevant site conditions are believed to be correctly represented in the Contract Documents, however the Contractor (and Subcontractors where appropriate) are requested to inspect the site to ascertain for themselves the nature and extent of the works and the rights and interests that may be interfered with in the execution of the works, as no claims for additional payment will be recognised on the grounds of insufficient description.

Particular attention is drawn to the required bearing capacities for Firth RibRaft systems, provided as part of this specification.

1.1.3 Adjacent Owners

Adjacent Owners

Carry out whatever actions or precautions are required to avoid or to absolutely minimise noise, dirt, dust, access, etc. inconvenience or disruption of any nature to the adjacent owners or tenants. Indemnify the Principal against any claims arising from this source.

1.1.4 Protection

Protection

Take all appropriate precautions to protect all third party property, services, etc., and indemnify the Principal against any claims arising from the construction operations. Any damage to third party

property caused by construction activities or failure to protect shall be rectified as soon as possible by the person causing the damage, or by appropriately qualified trades-persons employed by the person responsible for the damage if necessary.
Suspend operations during weather which would affect the quality of work in progress. Secure the works as soon as possible against adverse weather, dust and vandals. Avoid structural damage that is caused by overloading.
Adequately protect all finished work and maintain until the date of Practical Completion. Each trade shall protect the work of all other trades, and each trade is responsible for making good any damage they cause to finished works. Arrange special protection as required for windows and doors, finished timber work, plumbing fittings and hardware, cabinets and other joinery, and similar items.

1.1.5 Responsibility

Responsibility
The Contractor will be held responsible for the full period of his legal responsibility in connection with this Contract for ensuring that all work execution, materials, and fittings, are completely in accordance with Contract requirements.
The Contractor is responsible to the Principal for the appropriateness and fitness, in relation to a reasonable expectation or requirement, of all of the materials and workmanship incorporated into the works by himself or his subcontractors; for this reason few specific guarantees are required in these contract documents. The terms and conditions of any warranty or guarantee required or provided shall not in any way negate the minimum remedies available under common law as if no warranty or guarantee had been furnished.
No apparent expression of the Architect's/Designer's reasonable satisfaction shall be deemed to be acceptance of defective materials or workmanship within the terms of the Contract or to be an authority for any Variation except where such Variation is authorised as provided for in the Contract. Instructions that are given verbally are deemed to be instructions for proper execution of the works and do not involve extra charges.

Workmanship in all trades is required to be equal to or better than recognised good trade practice. The Contractor shall provide all necessary setting out information and component dimensions for subcontractors and shall check and be responsible for the accuracy of their work.

Should any tradesperson consider that the surface finish or general conditions of previous work are unsatisfactory to ensure a proper finish for their own work thereon, that tradesperson shall give immediate notice to the Contractor or Architect/Designer as appropriate and shall not proceed until all necessary improvements have been made. Failing such notice the trade concerned will not be relieved of responsibility for a poor finish due to such unsatisfactory condition.
Specialist Finishes Subcontractors are responsible for ensuring that substrates are completely appropriate for them to achieve first class results, and to this end shall, in sufficient time, instruct the Contractor with regard any fixings, primings, sealings or whatever for the substrate that vary in any way from the substrate manufacturer's standard recommendations. The Contractor shall advise the Architect/Designer with regard these variances, and not proceed until the Architect/Designer has agreed to them.

The Contractor and all Subcontractors affected shall be jointly and severally responsible for completion of the whole of the works in a completely watertight condition and shall therefore examine all details to be satisfied that this condition can be achieved. If any detail is considered unsatisfactory the Architect/Designer shall be notified immediately and he/she will then either interpret the detail to the Contractor's satisfaction, or accept responsibility for watertightness at the points in question, always assuming reasonable workmanship.

Ensure that all materials or items incorporated into any particular construction or finish are compatible and that their individual use is approved by the manufacturers and/or suppliers of the other parts of the system.
For all electronic/electrical/mechanical operating systems all work and all necessary materials and items incidental to the primary item specified, that are incorporated into the works, shall be such as to leave a neat, efficient, easily maintained and robust installation, completely in accordance with all of the recommendations of the primary items' manufacturers. Where appropriate, source all parts of a system from a single supplier or manufacturer.

The Contractor shall make provision for all temporary works and services required for the satisfactory completion of the contract works. The Contractor shall pay all associated costs and fees; carry out all necessary maintenance, alterations and servicing requirements; and remove temporary works and services on completion of the contract works. Temporary works and services shall comply with the requirements New Zealand Building Code.

1.1.6 Specification

Specification
This Specification covers contract administration, standards, materials quality, workmanship and the scope of works only: the exact nature of the works and all specialist items, descriptions, etc., are contained on the drawings, which also take full precedence.
All clauses in all specification sections apply to their full extent and meaning to the entire Contract. Trade sections and paragraphs have been introduced into this specification for reference only and it shall not be construed that each trade section is a complete segregation of the materials and labour of that trade. The onus is on all trades to be conversant with any and all clauses which in any way affect their work.
(Be aware that the ‘scope’ noted in the ‘Project Overview’, and scope and general extent clauses within this specification, are included to provide a general indication only and must NOT be interpreted as schedules of quantities - the exact nature and extent of all aspects of the works are shown on the drawings).

1.1.7 Standards

Standards
New Zealand Standards (NZS), Australian Standards (AS), Joint Standards (AS/NZS), British Standards (BS), Acts of Parliament, Regulations made thereunder, Codes of Practice, and any specific Manufacturer's Instructions or Manufacturer's Recommendations that are referred to in these Contract Documents shall all be deemed to be the latest published edition thereof at the time of drawings issue, and shall be followed by the Contractor and all Subcontractors to the full extent

applicable consistent with the intent of this Contract. Documents cited within other cited publications are deemed to form part of this specification.
Where Standards have a number of Divisions, e.g. AS/NZS 3500.1, AS/NZS 3500.2, etc., each of the Divisions relevant to this project is deemed to form part of this specification.
Retain current copies of significant cited documents and manufacturer's technical literature on the site.

1.1.8 Authorities and Charges

Authorities and Charges

Comply with all relevant provisions of the NZ Building Code, and with all relevant territorial or statutory authority regulations, by-laws, obligations, etc. Give all required notices.

The Principal has obtained a Land Use Consent. The Principal has applied for and paid for the Project Information Memoranda, the Building Consent and other approvals required for the works to start. The PIM and Building Consent will be forwarded to the Contractor as quickly as possible after they are issued by the Territorial Authority. Note: It is an offence under the Building Act to carry out work not in accordance with a Building Consent.
Should the Building Consent be subject to any conditions which modify the requirements of the Contract Documents in any way, the Architect/Designer reserves the right to negotiate any or all of these modifying conditions with the Building Consent Authority. If after these negotiations additional work is required, it will be handled as a Variation to the Contract.

1.1.9 Code Compliance Certificate

Code Compliance Certificate

The Principal will apply for the Code Compliance Certificate (CCC) and any other licenses or approvals for the building to be used. However, Practical Completion will NOT be certified until the CCC inspection has occurred and any additional works required by the local Building Consent Authority have been completed. To this end it is recommended that the Contractor obtains all required certificates, guarantees, Producer Statements, as-built drawings, etc., required for the CCC application as work proceeds, to facilitate application for the CCC as soon as the works are completed. For his part, the Principal hereby undertakes to apply for the CCC within one day of all required material being in hand. Likewise, the Contractor should have capacity available to attend as quickly as possible to any items identified by the Building Consent Authority as being required prior to the issue of the CCC.

1.1.10 Co-ordination of the Works

Co-ordination of the Works

Co-ordinate the works of all trades to ensure efficient progress of the works. Ensure that all holes, sleeves, penetrations, supports, etc., that are required for services are correctly incorporated as work proceeds. Identify and sufficiently forward-notify the appropriate persons of all deadlines for the supply of fittings, components, information, etc.

1.1.11 Documents Interpretation

Documents Interpretation

Except where they are clearly to the contrary, all dimensions are deemed to be to the bare surface of concrete, masonry, timber framing or other basic construction material. All figured dimensions take precedence over scaled sizes. Where any detail is included in more than one drawing the larger scale detail takes precedence. Where any ambiguity exists refer to the Architect/Designer for interpretation.

The word 'provide' and the word 'fix' used separately in the Documents shall be taken to mean 'provide and fix' unless otherwise stated.

When the term 'allow' occurs in the Documents, except with reference to Monetary Allowances, the cost of the item shall be at the risk of the Contractor.

The terms 'approved', 'directed', and 'selected' when used in the Documents refers to the approval, direction or selection of or by the Architect/Designer. Please give adequate notice of when these decisions are required. 'Architect/Designer' shall mean the Architect or Designer, their representative or any Consulting Engineer engaged by the Architect/Designer.

1.1.12 Work Shown and Mentioned

Work Shown and Mentioned

The Contract Documents show the extent and nature of the works but there is no warranty expressed or implied that they show each and every minor detail or item required to be included by the Contractor. Should any material, structural member, fixing, or item or work appear to be inadequately described, yet obviously necessary for the neat, strong and satisfactory completion of the work, it shall be incorporated into the Contract Works.

1.1.13 Site Safety

Health & Safety

Comply with the Health and Safety at Work Act 2015 (HSWA), and with all relevant Health and Safety at Work Regulations 2016, and with all relevant WorkSafe New Zealand (WorkSafe) Approved Codes of Practice and WorkSafe Information and Guidance, particularly those for construction and building maintenance. Comply with the relevant provisions of the New Zealand Building Code, in particular Clause F5.

So far as is reasonably practicable and according to a PCBU's (person conducting a business or undertaking) primary duty of care, take all necessary steps required to make the site and the contract works safe, and to provide and maintain a safe working environment. Ensure that all those working on or visiting the site are aware of the site safety rules and are not unnecessarily exposed to hazards.

Each PCBU, so far as is reasonably practicable, must ensure the health and safety of workers, and that other people are not put at risk by its work. If more than one PCBU has a duty in relation to the same matter, each PCBU with the duty must, so far as is reasonably practicable, consult, co-operate with, and co-ordinate activities with all other PCBUs who have a duty in relation to the same matter. PCBUs can enter reasonable agreements with other PCBUs to meet their duties, but cannot contract out of their duties.

Notify WorkSafe as soon as possible when a notifiable event occurs. Take all reasonable steps to preserve the site of the notifiable event in accordance with WorkSafe requirements. Ensure that the site of the event is not disturbed until authorised otherwise by WorkSafe. Keep records of all notifiable events.

Scaffolding shall comply with all Statutory and Local Authority Regulations, with the WorkSafe 'Best Practice Guidelines for Scaffolding', AS/NZS 1576 (Scaffolding equipment), AS/NZS 4576 (Guidelines for Scaffolding), and AS/NZS 4994 (Roof edge scaffolding), and shall be maintained for the duration and removed on completion.

The use of ballistic fixings must absolutely comply with all relevant safety recommendations at all times. No rubbish fires are allowed on site. Portable/personal disc/tape players, radios and iPods must not be used anywhere on the site. No smoking on site, except in the designated location in accordance with the Smoke Free Environments Act 1990, the location of which will be determined by the Contractor, with the approval of the Principal.

Primary Duty of Care

A PCBU's primary duty of care includes, but is not limited to, so far as is reasonably practicable:
- providing and maintaining a work environment that is without risks to health and safety;
- providing and maintaining safe plant and structures;
- providing and maintaining safe systems of work;
- ensuring the safe use, handling and storage of plant, structures and substances;
- providing adequate facilities for the welfare at work of workers in carrying out work for the business or undertaking, including ensuring access to those facilities;
- providing any information, training, instruction, or supervision that is necessary to protect all persons from risks to their health and safety arising from work carried out as part of the conduct of the business or undertaking;
- monitoring the health of workers and the conditions at the workplace for the purpose of preventing injury or illness of workers arising from the conduct of the business or undertaking.

Health & Safety Plan

Before commencing work on the site, the Contractor shall prepare and submit to the contract administrator a health and safety plan. The health and safety plan shall include, but not be limited to:
- the health and safety of all people on the site and on other properties, and the general public;
- identification of existing and potential construction hazards and risks;
- safety procedures to eliminate, isolate or minimise construction hazards;
- the equipment to be used to minimise the hazards;
- the maintenance of a register of hazards for the site;
- the name and qualifications of the site safety person;
- emergency procedures;
- first aid facilities and safety equipment;
- the methodology for notifying, recording and investigating accidents and injuries.

Carry out all construction operations in accordance with the submitted health and safety plan.

1.1.14 Variations

Variations

The Architect/Designer will issue Site Instructions (SI) to amend or clarify the works. Upon receipt of a SI the Contractor shall immediately notify the Architect/Designer if he believes there are price or timing adjustment implications. The Architect/Designer will then issue a Variation Price Request (VPR) for pricing of the possible Variation by the Contractor, within the time stipulated, or within 10 days if no time is stipulated. If the Contractor does not return the VPR within the time stipulated the Architect/Designer will assess it at reasonable rates. Once agreement is reached on price and/or timing a Variation Order (VO) for the item will be issued. Note that works covered by a SI or a VPR must NOT be actioned until the VO is issued.

When a Variation is contemplated and timing does not allow SI and VPR action the Contractor is to advise, and record in the site diary, an estimate of price and timing implications. If accepted by the Architect/Designer, a VO will be issued immediately. The Contractor shall then co-operate with the Architect/Designer to establish agreed pricing.
Claims for Variations neither priced nor estimated prior to being put in hand (but considered valid) will be incorporated into Progress Payment Certificates or the Draft Final Accounts as claimed and accepted but with a proviso allowing 5 (five) days for written objections by either the Principal or the Contractor, to any aspect of them, for further consideration.

The Main Contractor's Variations Margin agreed pre-contract will be the maximum accepted for any trade unless higher rates are nominated pre-contract and are accepted. The Main Contractor's agreed Variations Margin shown shall be deemed to include all preliminary and general costs, overheads, variation processing costs, and profit. If no margin is given, a 5% overall margin will be applied.
Note that ‘loss of anticipated profit' claims consequent upon reduction of works extent will NOT be recognised, and that the cost of processing Variations is deemed to be included in the P & G Allowance.
Also note that for Variations pricing all materials shall be charged at the actual net invoiced cost plus margin; i.e. recognised ‘Trade Price’, volume discounted where appropriate.

1.1.15 Progress Claims

Progress Claims

Progress Claims shall be in writing, shall be in accordance with the requirements of the Construction Contracts Act 2002, and shall include all of the following:
- The overall amount claimed.
- The percentage completion and amount claimed for each Subcontractor. For accurate claim verification please ensure that this breakdown exactly matches the trades costs breakdown agreed-to pre-contract.
- The total Contract Sum Adjustment for any/all Variations authorised prior to the claim.
- Items covered by Monetary Allowances listed separately.
- And, if specifically requested, confirmation that amounts previously claimed on behalf of Subcontractors, certified by the Architect/Designer, and paid by the Principal, have actually been paid

to the Subcontractor (apart from normal retentions).
Note that retentions will be held exactly in accordance with the Conditions of Contract.

1.1.16 Cleaning and Completion

Cleaning and Completion
Clear construction debris and rubbish from the works at regular intervals, and additionally if so instructed by the Architect/Designer. Clean each space thoroughly before commencing any finishing works.

In preparation for the Practical Completion inspection carry out the following:
- Clean the works thoroughly, removing all debris, surplus materials, splashes, marks, temporary markings, etc. (All cleaning methods and materials shall be as recommended by the manufacturer of the item being cleaned).
- Remove protective wrappings and coverings unless otherwise directed.
- Touch up minor painting faults, carefully matching colour, and brushing out edges. Repaint any badly marked surfaces back to suitable break-lines.
- Adjust, ease and/or lubricate as required all doors, drawers, controls and other moving parts to ensure their efficient operation.
- Any other works required to leave all spaces ready for immediate occupation and all electronic/electrical/mechanical systems fully operational.
- Clean out all spoutings, gutters, downpipes, and gullies and flush out all drains.
- Clean all sanitary appliances and check all aspects of the water services.
- Thoroughly re-inspect all aspects of the works (and have any defects fully rectified) to be certain that the works are completely ready for the Practical Completion inspection - if an unreasonable number of items are noted by the Architect/Designer during the inspection it will be terminated and then rescheduled for at least a week forward to allow proper completion to be achieved.

(Note that a Code Compliance Certificate must be obtained before Practical Completion will be certified. Obtain all required certificates, guarantees, as-built drawings, etc., as work proceeds to enable the CCC application to be submitted as soon as construction is completed).

1.2 Project Specifics

1.2.1 Nominated Subcontractors

No Nominated Subcontractors
There are no Nominated Subcontractors within this Contract.

1.2.2 Separate Contractors

No Separate Contractors
There are no Separate Subcontractors

1.2.3 Contingencies Sums

Contingencies Sum

Allow a Contingencies Sum of $25,000 (Twenty five thousand dollars) to be handled exactly as stated in the Conditions of Contract.

1.2.4 Prime Cost Sums

No Prime Cost Sums

There are no Prime Cost Sums within this Contract.

1.2.5 Provisional Sums

No Provisional Sums

There are no Provisional Sums within this Contract.

1.2.6 Separate Sections

No Separate Sections

The works are not divided into Separate Sections.

1.2.7 Contractor's Performance Bond

No Contractor's Performance Bond

A Contractor's Performance Bond is not required.

1.2.8 Principal's Bond

No Principal's Bond

A Principal's Bond is not available.

1.2.9 Principal Supplied Items

No Principal Supplied Items

The Principal is not supplying any items to be incorporated into the works.

1.2.10 Defects Liability Period

Other DLP

The Defects Liability Period is 12 months, commencing on the date that Practical Completion is achieved.

1.2.11 Fluctuations

Fluctuations Not Allowed

Fluctuations are not allowed in this Contract. (This will be a Fixed Price Contract. The Contract Sum will not be subject to fluctuations resulting from variations which give rise to an extension of time, and the Preliminary and General Costs Allowance and the Contractor's Margin will not be adjusted unless the scope of the Contract is substantially changed).

1.2.12 Retentions

Retentions

Retentions will be 10% of the first $200,000, plus 5% of the next $800,000, plus 1.75% of any balance. 40% of the total retentions will be released when the certificate of Practical Completion becomes payable, the balance on termination of the Contract.

1.2.13 Contractor's Retention Bond

No Contractor's Bond in Lieu of Retentions

A Contractor's Bond is not acceptable in lieu of Retentions.

1.2.14 Liquidated Damages

Liquidated Damages Do Not Apply

Liquidated Damages do not apply to this Contract.

1.2.15 Early Completion Bonus

No Bonus

There is no Early Completion Bonus within this Contract.

1.2.16 Contract Sum

By Pre-contract Negotiation

The Contract Sum will be established by negotiation pre-contract.

1.2.17 Insurance of the Works

At the Risk of the Contractor

Insurance of the works is at the risk of the Contractor, and shall be completely in accordance with the Conditions of Contract.

1.2.18 Other Insurance

Other Insurances

The minimum amount of the Contractor's public liability insurance shall be $2,000,000, the minimum amount of the Contractor's motor vehicle liability insurance shall be $200,000, the Contractor shall insure all appliances, machinery and apparatus required for the Contract Works but not incorporated into the Contract Works, and no Contractor's professional indemnity (design) insurance is required.

1.2.19 Sundry

Sundry

The Contractor is responsible for accurate setting out of the works. It is recommended that the Contractor engage a Registered Surveyor to establish the basic site set-out and the floor levels.

A Registered Surveyor, engaged by the Contractor, shall check and confirm the accuracy of the Contractor's detailed setting out of the works and shall certify this in writing to the Architect/Designer.

Note that the 'Project North' direction is identified on the Site Plan, and that all direction or orientation references within this specification or on the drawings are in terms of this Project North.

A competent foreman shall be constantly on the works and any instructions or explanations given to such persons shall be deemed to have been given to the Contractor.

Notify the Principal each time it is necessary to isolate sections of the heat detectors system. Ensure that the duration or these periods of isolation are absolutely minimised.

Contractor and Subcontractors must familiarise themselves with egress routes from the building, and must ensure that egress routes are NEVER obstructed with construction materials such as to prejudice egress.

Power, water and cable communucations services are already on the site. Arrange and pay for adequate temporary connections to these services for the duration of the contract.

1.2.20 Warranties

Warranty for Weathertightness and Watertightness

The Contractor shall provide a warranty, for a minimum period of 2 years, covering the weathertightness of the completed building envelope and the watertightness of all liquid supply and liquid disposal systems and fittings.

Installer/Applicator Warranties

Provide Installer/Applicator warranties in favour of the Principal, covering execution and materials of proprietary products or complete installations.

- An Installer/Applicator warranty may be offered in lieu of the warranty otherwise required for that section of work, but only when it is subject to similar conditions and period stated in the Schedule of Warranties.
- The terms and conditions of the Installer/Applicator warranty shall not negate the minimum remedies available under common law as if no warranty had been provided.
- Failure to provide the required Installer/Applicator warranty does not reduce liability for execution and materials required for that section of work.
- Conform to the Installer's/Applicator's standard warranty form, or to the Warranty Agreement form included in the contract documents if a standard form is unavailable.
- Commence all Installer/Applicator warranties from the date normally applicable for the work.
- Maintain the effectiveness of all Installer/Applicator warranties for the period stated.
- Provide all Installer/Applicator warranties before practical completion.

Manufacturer/Supplier Warranties

Provide Manufacturer/Supplier warranties in favour of the Principal, covering materials, equipment, appliances, proprietary products, etc.

- The terms and conditions of the Manufacturer/Supplier warranty provided shall not negate the minimum remedies available under common law as if no warranty had been offered.
- Failure to provide the required Manufacturer/Supplier warranty does not reduce liability for execution and materials required for that section of work.
- Conform to the Manufacturer's/Supplier's standard warranty form.
- Commence all Manufacturer/Supplier warranties from the date normally applicable.
- Maintain the effectiveness of all Manufacturer/Supplier warranties for the period stated.
- Provide all Manufacturer/Supplier warranties before practical completion.

Master Build Services 10-Year Premium Guarantee

Provide a Master Build Services 10-Year Premium Guarantee for new homes and alterations and additions, covering loss of deposit, and non-completion, and defects in materials and workmanship, and structural defects, and rot and fungal decay, under the terms of the guarantee offered by Master Build Services Ltd. Execute the guarantee with all three signatories - the Owner, the Registered Master Builder, and Master Build Services Ltd - before starting the contract works.

CBANZ Homefirst Builders Guarantee

Provide a Certified Builders Association of New Zealand (CBANZ) Homefirst 10-Year Builders Guarantee, covering loss of deposit, and structural defects, and non-structural defects, under the terms of the guarantee offered by CBANZ. Execute the guarantee with both signatories - the Owner and the Certified Builder - before starting the contract works. Lodge the guarantee application with Builtin NZ Ltd along with the required documents and the fee payable.

2 SITEWORKS

2.1 Preliminary

Refer to General Conditions of Contract and the Special Conditions in this Specification as appropriate. Read this section in conjunction with all other trade sections.

2.2 Compliance

Comply with the New Zealand Building Code 1992 including all revisions and amendments, Verification Methods where appropriate, and construction principles that are embodied in the Acceptable Solutions.

2.3 Site & Scope

2.3.1 Site

Disclaimer
Note that no claims will be recognised on the grounds of insufficient description of existing site conditions in the Contract Documents.

Care - option 2
Take great care to excavate/cut up to the boundary, but not over.

2.3.2 Scope

Included Works
This section covers:

Removal of vegetation
Excavation of topsoil and stockpiling and final distribution
Excavation as required for foundations, slabs, and drive

Supply, placing and compaction of hardfill basecourse and sand blinding
Supply and placing of any site concrete required

Preparation for and installation of paving
Preparation for, and installation of exposed aggregate paving

Preparation for, and installation of topsoil to planter areas
Instant lawn supply and installation
Grass for disturbed areas around the works areas

2.3.3 Waahi Tapu

Cultural Site Unearthing
During excavation, should a waahi tapu or other cultural site be unearthed the contractor shall cease operations, inform the local Iwi, inform the NZ Historic Places Trust and apply for an appropriate

authority if required, and, take appropriate action, after discussion with the NZHPT, TA and Iwi to remedy any damage and/or to restore the site.

Authority

Note that in accordance with the Historic Places Act 1993, where an archaeological site is present (or uncovered), an authority from the NZ Historic Places Trust is required if the site is to be modified in any way.

2.4 Excavation & Siteworks

2.4.1 Excavation

Excavation Basics

Excavation work shall be carried out in accordance with the WorkSafe NZ Excavation Code of Practice. Co-ordinate with other trades as to set-out and timing to ensure that all cut faces are covered or finished etc. as soon as possible after the excavation is complete.

Stockpiling

Plan the excavation carefully to ensure that stockpiles will not interfere with concrete construction, to stockpile just sufficient material for the filling, backfilling and reshaping required later, and to avoid overlaying areas outside the works area with material.

Prior Excavations

As the bulk scope of excavations works will have been carried out prior to commencing work on site, advise and co-ordinate with the separate contractor to ensure that the main building platform is consistent with what is expected. If any concerns are raised please immediately advise the Architect for direction.

Excavation Levels

Cease machine excavation above final levels and trim to the finish profiles by hand where appropriate. Any over excavation in critical foundation, etc. areas made up with 10MPa concrete unless otherwise approved. Trim slab benches exactly to the required level to allow for hardfill and blinding.

Excavation Noise

Noisy excavation equipment shall be used only during hours which will avoid undue nuisance to the occupants of adjacent properties.

Excavate Accurately

Excavate accurately in position and true to line and minimum sizes and to levels and grades required for all slabs, footings and foundations, and over the rest of the areas shown for levels adjustment.

Ground Bearing Capacity

Below slabs on ground the general intent is to excavate to a stable undisturbed subgrade (of 300 kPa ultimate bearing capacity typically).

RIbraft floor systems specify 200 kPa ultimate bearing capacity is acceptable. Refer specifically to Firth Ribraft systems Manual for testing procedures.

Slab Benches

Trim slab benches as required to allow for hardfill and blinding.

Batter Excavation Cuts

Batter all excavation cuts at a stable slope.

Excavated Material

From the excavated material select the most appropriate material for compacted filling and stockpile it in appropriate positions sufficient for filling and backfilling (but NOT for hardfilling).

Surplus Material Removal

Remove all surplus material from the site as soon as it is excavated, taking care to avoid damaging the footpath or streets or spilling material on to them.

Water-softened Excavations

Keep excavations free of water - remove foundation trench material which becomes water-softened.

Rainwater Runoff

Ensure that rainwater runoff from excavated surfaces does not carry material onto adjacent properties.

Unexpected Conditions

Report for instruction when any unexpected voids, made-up ground or similar are encountered.

Unexpected Excavation Items

Report the finding of antiquities or other items of value, and leave them undisturbed until approval (and instruction) is given for their removal - they remain the property of the Principal.

Excavation Inspection

As soon as excavation and filling is complete foundation material will be inspected by the Architect, and any changes to foundation widths/details will be directed.

2.4.2 Excavation Completion

Engineer's Inspection

As soon as excavation and filling is complete and before any concrete is placed or other work proceeded with the foundation material will be inspected by the Engineer, and any necessary changes to foundation widths or details will be directed.

2.4.3 Filling

Excavation Filling
Filling with salvaged material (of appropriate moisture content) shall be compacted in 150mm layers with mechanical rammers, to 95% relative compaction. All work generally in accordance with the provisions of NZS 4431.

On completion clean up the stockpile areas and the site.

2.4.4 Hardfill & Blinding

Hardfill - option 2
Hardfill under slabs on grade shall be 150mm of standard TNZ AP40 basecourse free of clay or organic matter compacted to 95% relative compaction in accordance with NZS 4402 Test 4.1.1.

Blinding - option 3
Blind hardfill under all slabs to a minimum 20mm thickness with clean damp sand.

2.5 Drives, Paths & Paving

2.5.1 Cars Area

Cars Area Construction
To the cars area identified on the setout plan, and soon after the excavation work is completed and approved, install an 80mm layer of no fines drainage chips or roading reject 20mm chips, and partly compact this layer into the sand subsoils. Finish the edge of the chips to reasonably smooth lines (where drawn), but without any permanent edging.

2.5.2 Insitu Concrete Paving

Paving Set-out
Check that the stormwater sump, Telecoms/Telstra, power, water and gas service lines are correctly in place and have been fully operationally tested.
Accurately setout the drive ensuring that all gradients are correct.

Reinforcement - Grade 300
Reinforce with 665 grade 300 mesh, plus a D12 bar to all edges, and pour the Ordinary Grade (20MPa) concrete slab, with all aspects of the work to the requirements of the Concretor section of this specification.

Slab thickness: 100mm

Exposed Aggregate Finish
Steel trowel finish to a true surface and immediately spread an even layer of the finishing aggregate and press it into the surface. Lightly spray the top surface with a cure retarder and, when the cement has fully bound the aggregate, sweep and wash the top surface to expose it. Ensure the finishing aggregate is spread before the initial set of the concrete to obtain a good bond - to achieve this it may

be necessary to finish the slab progressively.
A very well-bonded and well cleaned finished surface with clean straight edges is required. To this end the operative carrying out the exposed aggregate paving must be experienced in work of this nature – if so requested provide two or three location references where his earlier similar work may be inspected.

2.5.3 Paving Preparation

Check
To all hard landscaping areas check that all topsoil and soft material has been removed.

Check setout and gradients of landscaping profiling, and check kerbs etc. are accurate and properly cured.

Paving Preparation
Place and compact, to 95% relative compaction, 100mm minimum thickness of standard M4 basecourse.

Build the compacted hardfill up to 80mm below the required finished levels.

Construction Note
It is suggested that the hardfilling is carried out as soon as the excavation is completed, to avoid a quagmire during use by construction activities, and that hardfilling is made good (and up to full compaction required) as necessary just prior to finish paving.

Sand Base
Just prior to paver installation lay a 35mm thick damp sand base on top of the prepared basecourse compacted down to approximately 30mm finished thickness to the required falls with nominal 1:40 fall.

2.5.4 Paving Type

Insert Paving Type
All paving selection is to be provided by the principal.

2.5.5 Paving Installation

Lay Pavers
Lay pavers to true even surfaces with smooth transitions, on a 30mm bed of properly graded sand, with 2 to 3mm joints between pavers. Sand bed to have a very heavy application of approved long-term weedkiller applied just ahead of blocks.

Edit Laying Direction
Laid square to the building axis.

Compact the pavers down.

Edit Edge Pavers

Edge pavers mortared onto a 200x100 concrete footing reinforced with 1-D12 rod.

Paving Finishing - option 2

Immediately having installed pavers seal the surface, allow to dry and then lock the pavers in place with a sand sweep/fill between pavers after installation all in accordance with the manufacturer's installation instructions.

Gradients

Unless otherwise shown install paving with a minimum fall of 1:40 away from buildings.

2.6 Landscaping

2.6.1 Topsoil

Topsoil - option 1

On completion of all exterior works supply top grade (but not sterilised) topsoil and spread to 150mm lightly compacted thickness.

2.6.2 Grass

Grass - option 1

Spread mixed grass seed at the recommended rate (grass seed blend as recommended for the exposure/soil/subsoils), spread lawn fertilizer at the recommended rate, and water and keep watered and keep the birds away as required until a good lawn appears.

3 CONCRETE

3.1 Preliminary

Refer to General Conditions of Contract and the Special Conditions in this Specification as appropriate. Read this section in conjunction with all other trade sections.

3.2 Compliance

Comply with the New Zealand Building Code 1992 including all revisions and amendments, Verification Methods where appropriate, and construction principles that are embodied in the Acceptable Solutions.

Comply with all relevant provisions and recommendations of:

3101.1&2:2006(NZS)	Concrete Structures Standard
3104:2003(NZS)	Specification for concrete production
3109:1997(NZS)	Concrete construction
3114:1987(NZS)	Specification for concrete surface finishes
3604:2011(NZS)	Timber-framed buildings
4671:2001(AS/NZS)	Steel reinforcing materials

3.3 Ribraft Concrete Floors

3.3.1 Scope

Scope

Supply the required/selected Firth RibRaft components and construct the concrete on-ground floor slab as shown on the drawings. All aspects of this work shall be in accordance with the Firth RibRaft Technical Manual Manual (check www.firth.co.nz or call 0800 800576 for the latest edition), a copy of which must be held on site (and referenced for any aspect where there is the slightest uncertainty), the RibRaft Floor System CodeMark Certificate of Conformity - Certificate No:CMA-CM40015(Rev1), and as shown on the drawings.

No Substitutions are permitted for Firth RibRaft Floor System.

3.3.2 Selections

220mm Pod Thickness - Non-specific Design

Pods thickness: 220mm

DPM: as per NZS 3604:2011

Slab thickness above pods: 85mm

Slab finish: U3

3.3.3 Installation

Installation

All RibRaft installation work shall be carried out by experienced and competent tradesmen, familiar with the techniques and materials specified, in accordance with Firth RibRaft Technical Manual and as shown on the drawings. All handling, preparatory blinding DPM, formwork and reinforcing, and concreting and finishing techniques shall be exactly as recommended by Firth Industries Ltd.
Notify the BCA for inspection of the excavation and of the Ribraft slab ready for pouring, and keep whatever records or test results they may require.

Check that all topsoil etc. has been removed from the RibRaft slab location and that the excavated (or hardfill made-up where necessary) platform is level and approximately 330mm below the required finished floor level. Co-ordinate with other trades to ensure that any wastewater drains or other piped or wired service lines are correctly incorporated (and fully operationally tested as appropriate) as work proceeds.

Place and compact any hardfill or basecourse required by the Engineer for specific design. Blind the surface with up to 50mm of sand, and compact (and adjust if necessary) to accurately level, carrying the sand blinding to at least 500mm beyond the RibRaft perimeter. (Install shear key piles if required or specified).

Lay the specified DPM over the entire platform and extending at least 200mm beyond the RibRaft perimeter, with strips lapped 150mm and 50mm PVC adhesive tape sealed, and any services penetrations tape sealed. Tape repair any damage to the DPM as soon as it occurs, and re-inspect/repair just before pouring. Construct the slab perimeter formwork as specified above and as detailed, including edge rebates and any slab cut-outs required.

Unload and handle components carefully to avoid any damage, and keep them clean until installed. Place the RibRaft pods in the grid pattern as shown on the layout plan, with Firth 300mm spacers to the perimeter and under loadbearing walls, and Firth 100mm spacers between all other pods. Neatly cut pods as required to infill where the shape or size of the slab does not match the 1.2m pods module.

Reinforce as specified and as noted on the drawings, ensuring the bars are positioned in the spacer lugs, install plumbing waste pipes etc. as required, and then install the reinforcing mesh over the top of the pods, seated on mesh chairs, and install the re-entrant corner steel (Grade 500E) across internal corners as noted. Install starters as detailed for any subsequent masonry walls, ensuring accurate positioning (as bending to masonry core positions is not acceptable).

Pour Firth RaftMix (or pump Firth RaftMix Pump), and vibrate and screed and finish as specified, and cure and install shrinkage control joints as specified or noted.
Remove trade debris from the area progressively; on completion leave the works area completely clean.

4 CARPENTRY

4.1 Preliminary

Refer to General Conditions of Contract and the Special Conditions in this Specification as appropriate. Read this section in conjunction with all other trade sections.

4.2 Compliance

Comply with the New Zealand Building Code 1992 including all revisions and amendments, Verification Methods where appropriate, and construction principles that are embodied in the Acceptable Solutions.

Comply with all relevant provisions and recommendations of:

1170.2:2011(AS/NZS)	Structural design actions - Wind actions
1170.5:2004(NZS)	Structural design actions - Earthquake actions - New Zealand
1491:1996(AS/NZS)	Finger jointed structural timber
1604.3:2012(AS/NZS)	Specification for preservative treatment - Part 3: Plywood
1859.1:2004(AS/NZS)	Reconstituted wood-based panels - Specifications - Particleboard
1859.2:2004(AS/NZS)	Reconstituted wood-based panels - Specifications - Dry-processed fibreboard
2269.0:2012(AS/NZS)	Plywood - Structural - Part 0: Specifications
2270:2006(AS/NZS)	Plywood and blockboard for interior use
2271:2004(AS/NZS)	Plywood and blockboard for exterior use
2295:2006(NZS)	Pliable, permeable building underlays
2588:1998(AS/NZS)	Gypsum plasterboard
2589:2007(AS/NZS)	Gypsum linings - Application and finishing
2785:2000(AS/NZS)	Suspended ceilings - Design and installation
2904:1995(AS/NZS)	Damp-proof courses and flashings
2908.2:2000(AS/NZS)	Cellulose-cement products - Flat sheets
3602:2003(NZS)	Timber and wood-based products for use in building
3603:1993(NZS)	Timber Structures Standard
3603:1993(NZS)A4	Timber Structures Standard: Amendment 4
3604:2011(NZS)	Timber-framed buildings
3617:1979(NZS)	Specification for profiles of weatherboards, fascia boards, and flooring
3618:1984(NZS)	Mechanical stress grading of timber
3622:2004(NZS)	Verification of timber properties
3631:1988(NZS)	New Zealand timber grading rules
3640:2003(NZS)	Chemical preservation of round and sawn timber
4200.1:1994(AS/NZS)	Pliable building membranes and underlays - Materials
4200.2:1994(AS/NZS)	Pliable building membranes and underlays - Installation

	requirements
4219:2009(NZS)	Seismic performance of engineering systems in buildings
4357.3:2006(AS/NZS)A1	Structural laminated veneer lumber - Determination of structural properties - Evaluation methods: Amendment 1
4389:2015(AS/NZS)	Roof safety mesh
4859.1:2002(AS/NZS)	Materials for the thermal insulation of buildings - General criteria and technical provisions
NZBC B2	Durability
NZBC E2	External moisture
NZBC E2/AS1	External Moisture

4.3 General

This section includes the receiving, stacking and storage of all Carpenter's materials and the fabrication, erection and fixing of all framing, sheathings and finishing timbers, including all work incidental to neatly finishing in other trades and all temporary work and temporary bracing.

The Carpenter shall attend upon all trades, and shall supply and fix all obviously necessary but not specifically mentioned fixings and materials.

4.4 Workmanship & Materials

4.4.1 Workmanship

Supervision

Where required by the NZ Building Act 2004 it is the building contractor's responsibility to ensure that all restricted building work is carried out by a Licensed Building Practitioner. It is the main contractor's responsibility to ensure that the construction of all structural timber complies in all respects with the drawings and the specification.

All non-restricted building work shall be carried out by or under the direct supervision of competent tradespersons, suitably qualified for the work undertaken, and in accordance with the best and latest trade practice.

Timberwork

All timber shall be worked and cut to be true and square and free from wind and warp with all joints matching and mating to a proper contact fit over the full surface of the joint. All connections whether nailed screwed, glued, mortised or dovetailed shall be accurately made and properly executed to provide sound satisfactory connections for the class of work required.

Timber containing unacceptable defect or distortion shall not be cramped to provide mating at connections but shall be discarded and replaced by true defect-free timber before connections are made. Distribute any acceptable defects in timber so as not to impair the strength or the appearance of the finished work. Do not cut studs across the grain to straighten them.

The checking and cutting away of timbers shall be avoided where possible and shall be limited to such dimensions as will not prejudice the purpose for which the timber is used. Observe NZS 3604 restrictions on holing and checking of timber joists and beams. Concealed services pipes and wiring shall not project beyond the framing face and where possible shall be beyond the linings/claddings fixings reach.

Neatly punch exposed nailing to the diameter of the nail head below the surface. Completley remove bruises and tool marks, and replace all split timbers and hammer-marked finishing timbers.

Fit a 3-ply bituminous DPC or a single layer high impact polyethylene DPC at all timber to concrete junctions to provide complete separation. Ensure that the DPC material is compatible with the timber treatment.

Clean out framing voids before fixing sheathings or linings. Ensure framing voids are fully vermin proofed to the exterior. Build in as necessary all required flashings (supplied by others) to windows, doors, roof edges, etc.

Roof Underlay

Install heavyweight building paper or breathable/absorbent roof underlay behind roof cladding as detailed, with minimum 150mm side and end laps, lapped such that any water will be shed to the outside of the underlay, and sufficiently tensioned in a manner that prevents sagging or ponding.
R1 class roof underlays shall be fully supported on nylon straps or non-corrosive netting/mesh; R2 class self-supporting underlays shall be laid to maximum 1200mm span between adjacent supports.
Run roof underlay horizontally or vertically up the roof slope on roof pitches above 10° pitch, and horizontally on roof pitches 10° or less.
Fix roof underlay at maximum 300mm centres to purlins, with 6mm - 8mm stainless steel staples or 20mm large-head galvanised clouts or proprietary underlay fixings.
For tiled roofs, lay the roof underlay over the anti-ponding board and no-corrosive support netting/mesh, and fix at maximum 300mm centres to the rafters/trusses before the tile battens are installed.
Finish roof underlay along roof edges and junctions, valley gutters, and at the ridge as shown on the drawings. Carefully cut underlay at roof openings at 45º angle away from each corner and lap-tape closed to framed up-stands, ducts and other services penetrating the underlay in accordance with the underlay manufacturer's requirements and as detailed. Roof underlay must be separated from chimneys and flues in accordance with the requirements of the NZBC C1-C6 Acceptable Solutions.
Any damaged underlay shall be made good by lapping in a new section.
Do not leave roof underlays exposed before covering with the roof cladding for more than the manufacturer's recommended duration.

Window Installation

Prepare window and external door framing openings for joinery installation by neatly cutting the building wrap at 45º into corners, returning turning the wrap through the frame depth and fixing to the inside face.
Over-flash the underlay along the sill with a flexible flashing tape, installed full frame depth and length of the opening, returned minimum 100mm up the jambs, and with minimum 50mm return over the outside edge.

Over-flash the underlay at head/lintel corners with a flexible flashing tape, extending minimum 100mm each way from the corner, full frame depth, and with minimum 50mm return over the outside face.

Install external joinery frames with metal flashings as detailed and/or as required to completely weatherproof all frame-to-cladding junctions.
Unless shown otherwise, head flashings shall be carried minimum 75mm up behind claddings, extended at 15º out over the joinery head or facing board and returned down to cover the joinery or facing board minimum 10mm and finished with a 5mm, 45º 'kick out' drip-edge.
Neatly dress down the head flashings at the ends of the facings - for drained cavity construction, also form up-turned stop-ends in-line with the outside edge of cavity above.
Install metal (as specified) head flashings, fixed over the wall underlay, with the flashing upstand over-flashed minimum 50mm with a flexible flashing tape against the underlay, or with an additional piece of underlay extended over and lapped behind the underlay above, behind the inter-storey flashing or sill flashing above, or to the underside of the eaves.
Unless shown otherwise, sill flashings, where required, shall have a minimum 5º slope, minimum 8mm rear upstand with sealed sloping stop-ends, and be carried down minimum 35mm over the lower cladding and finished with a 5mm, 45º 'kick out' drip-edge.

Take delivery of window and door joinery. Check substrates for correct profile and alignment and that the joinery is fabricated to the correct wall construction set-out and depth. Set shims or pack as necessary to install joinery exactly true and square. Use appropriate separators between aluminium and other materials, and fix securely with due regard for any anticipated movements and for linings, trim, etc.

Install neat sealant beads as detailed or required.

After joinery installation, install closed cell backing rods as required and expanding foam seal the gap between the opening substrate and joinery liners/reveals (all round, from the inside).

On completion ensure that all sashes and doors neatly fit the openings with regular tolerances to all edges, and that all moving components and hardware are correctly adjusted and operating smoothly, without binding, to the required functionality.

Joinery Installation

Take delivery of all scheduled joinery items (doors, cabinets, shelves, etc.) and install in the positions shown, accurately aligned, true to level, plumb and square, and securely fastened as noted and in accordance with best trade practice and with due regard for adjacent linings, finishes and trim, and anticipated movements.

Cabinets scribed and/or recessed packers scribed to adjacent surfaces as detailed or directed. Protect all installed Joinery from damage including surface marking and contamination, dirt and dust, and moisture until completion. Do not use Joinery items for working supports or platforms or for storage of materials or tools and equipments.

On completion ensure that joinery item doors and drawers all neatly fit the openings with regular tolerances to all edges, and that all moving components and hardware are correctly adjusted and operating to the required functionality.

4.4.2 Timber

Timber Materials

All timber shall be graded in accordance with NZS 3631 - Structural Grade MSG8 or better for all framing timber - (to meet the requirements of Table 2.3 of NZS 3603 for mechanically graded timber), and Dressing Grade for all finishing timber. Timber that is deemed below standard, in the opinion of the Architect/Designer, shall be removed from the site.

All non-durable timber, including components in manufactured items, shall be appropriately treated against moisture and/or insect decay by treatment plants with recognised quality assurance systems that are administered by the Timber Preservation Council (NZTPC). Treatment of timber and wood-based building products shall be to the requirements of NZS 3602 as an absolute minimum, and all treated timber shall be identified and marked as required.
Ensure that similar timbers with different treatment levels are carefully managed during construction to avoid accidental use of an H1 treated item where H3 hazard class treatment is required by the NZS 3602.
Do not use LOSP (light organic solvent-based preservative) treated timber that has not adequately 'flashed-off'.
Ensure that all cut or drilled surfaces of H4 and H5 hazard class treated timbers are flood coat re-treated, with the product recommended by the original treatment plant, before installation.

All timber shall be seasoned or kiln dried, to the stable moisture content, be straight and true and free from wind, warp and distortion, and in lengths suitable for the members required and the location in the finished construction. All framing timber shall have a moisture content between 12% and 18 % before being installed. If the use of inadequately seasoned timber results in damage or opening joints in the finished building the timber shall be replaced. Fixing of internal linings shall be delayed after closing in until the timber framing has dried back below 20% moisture content and to allow for the maximum settling of substrates.

All kiln dried, dressed and/or finishing timbers shall be stacked under cover on delivery to the site, and all timber shall be full to the nominal sizes shown or specified, subject only to normal cutting and dressing tolerances.
All finishing timber shall have machine marks, stains and roughness removed and shall be sanded smooth.

Ensure that enclosed surfaces and ends of paint-finished exterior finishing timbers are fully primed before fixing. If this trade (Carpentry) carries out the priming it shall be to the specification and standard required of the Painter.

Unless specified otherwise, exposed framing timbers shall be unfinished to the exterior, and be fine bandsawn milled, treated with a minimum of discolouration, handled carefully at all times to avoid

surface damage, and delivered free of crayon or pencil or other markings. Hazard class treatment markings shall be on the ends, NOT on the faces.

Timber Species

Unless noted or specified on the drawings, in the list below, or elsewhere in this specification all timber used shall be Radiata pine.

Other timbers shall be as follows:

- Douglas Fir (*NZ Oregon, Psuedotsuga menziesii*)
- Jarrah Clears (*Eucalyptus marginata*)
- Kwila Clears (*Merbau*)
- Balau (*Shorea spp*)
- Kwila (*Merbau*)
- Cedar Clears (*Western Red Cedar, Thuja plicata*)
- Rimu - (*NZ Red Pine*)
- Vitex Clears - (*Vitex cofassus*)
- Eucalypt Saligna Clears - *(Sydney Blue Gum*)
- Tasmanian Oak - (*Eucalyptus delegatensis / obliqua / regnans*)

Note: the use of alternate grades and varieties to those specified is subject to approval in each instance.

Timber Cavity Battens

To wall areas as noted install H3.1 treated ex.40mm x 20mm timber battens to form a drained vertical cavity complying with E2/AS1 in all respects. Ensure that Rigid Air Barriers and flexible flashing tape are completely and correctly installed before fixing battens in place. Fix the battens with 60mm hot-dip galvanised flat head nails at maximum 400mm centres, ensuring that the batten set-out completely fulfils the cladding's fixing requirements. Install 1:12 sloping horizontal cavity spacers where required to suit claddings, keeping the ends 50mm clear of the vertical battens.

Other Materials

Materials shall be delivered to site with the packaging and labelling intact, shall be of the same type, finish or colour to maintain continuity, shall be stored, and conditioned if required, in accordance with manufacturer's recommendations, and shall be protected from damage, contamination, and moisture - as appropriate.

Handle all materials in accordance with best practice and the manufacturer's requirements, and in a manner that prevents damage or deterioration to the material. Do not use damaged or defective materials or products, or products that are beyond their designated shelf life.

4.4.3 Laminated Veneer Lumber

Laminated Veneer Lumber

Laminated Veneer Lumber (LVL) shall comply with AS/NZS 4357.0. Each piece of structural LVL shall be branded at least once with the manufacturer's logo and a registered brand or marking that clearly identifies the structural properties that apply to the product and its limitations on end use; all in conjunction with associated published literature.

Structural properties identified in the associated published literature shall be:
- details of marking specific to the product
- veneer details
- physical properties including
  - modulus of elasticity
  - bending stress
  - tension stress parallel to grain
  - compression stress perpendicular to grain
  - compression stress parallel to grain
  - shear stress
- joint group
- density
- dimensional tolerances
- adhesives used
- limitations on end use

The storage and handling of LVL shall comply with Appendix A of AS/NZS 4357.0. In particular:
- LVL should be kept dry during storage and transit
- LVL should be stacked on bearers well clear of the ground and arranged so that their supporting surfaces are in the one plane
- Bearers should be spaced sufficiently close so that LVL spanning between them does not deflect excessively under its own weight.
- Bearers or spacers within a stack should be located near direct vertical alignment
- Care should be taken in lifting and handling LVL in order to avoid mechanical damage
- Wrapping should avoid and prevent entrapment of moisture
- LVL should not be used in high humidity conditions or exposed to the weather.

4.4.4 Proprietary Sheet Bracing Systems

Proprietary Sheet Bracing Systems

Proprietary sheet bracing systems to walls, ceilings and sub-floor foundations shall be installed in strict accordance with the manufacturer's technical literature and design guides. No materials specified in the manufacturer's technical literature and design guide can be substituted without the written approval from the Architect/Designer.

4.4.5 Proprietary Roof Trusses

Proprietary Roof Trusses

Roof trusses shall be of proprietary design, complying with the requirements of NZS 3603, NZS 3604, and AS/NZS 1170, and manufactured by suitably qualified fabricators.

Make allowance for all notching and holing to timber members to accommodate roof bracing etc., in the design of member sections of the roof trusses. Allow for all additional rafters, purlins, fixings and bracing necessary to complete the roof framing system with all accessories and incidental items necessary for proper installation even where not specifically shown on the drawings.
Proprietary roof trusses shall be designed to carry all imposed gravity and lateral loads. Refer to the

approved design drawings for truss set-out and specified design loads. Roof trusses are assumed to be generally at 900mm centres spanning clear between walls or roof beams as shown on the drawings. The Main Contractor is responsible for the design of proprietary roof trusses, including their layout and interaction with and dependence on adjoining elements.

Provide all necessary design information and shop drawings for all proprietary roof trusses to be incorporated in the works for review prior to fabrication.
Provide Producer Statements from a Charted Professional Engineer covering the design and construction of the roof trusses. Provide all information required by the Territorial Authority for the purpose of obtaining a Building Consent.

4.4.6 Flooring

Particleboard Flooring
20mm high density temporary weatherproofed flooring grade particleboard, installed in accordance with the manufacturer's requirements to the locations shown on the drawings.
Use sheets as large as possible, and set out sheets to approval. Accurately cut sheets to size, with the edges shot as necessary to provide tight butt joins. All handling, observation of requirements to accommodate moisture movement, expansion gaps and off-sets from fixed elements, fixings and adhesives and other aspects of this work shall all be exactly in accordance with the manufacturer's recommendations.
Punch nail fastenings and lightly sand particleboard flooring to an even finish over the entire surface before laying floor coverings or clear finishing, taking care to avoid damage to finished adjacent work - do not over-sand flooring.

4.4.7 Fixings

Nails
Comply with the requirements of NZS 3604 Section 2.4.4 and the Nailing Schedules of NZS 3604 as applicable. Unless noted or specified on the drawings or elsewhere in this specification, all nails fixing exterior timbers shall be Grade 304 or 316 stainless steel. Nails that will be covered with plaster or any similar material shall be hot-dipped galvanised, unless noted or specified otherwise.

Finishing brads to all finishing timbers shall be set out neatly and punched to the diameter of the nail below the surface. Bore slightly undersize holes for nailing that could cause splitting of the timber. Power-driven staples are completely unacceptable in finishing timbers.

Screws
Screw fastenings shall be of suitable gauge, head type, thread design, and length to provide secure fastening into the substrate material, and be suitable for the assembly/construction of the fixed item/element and the substrate material.
Unless noted or specified otherwise, screws exposed to the exterior shall be Grade 304/316 stainless steel or hot-dipped galvanised, and hot-dipped galvanised or similar corrosion resistant for damp situations.
Self-drilling screws shall be in accordance with AS 3566 for fastener type and corrosion resistance class.
Unless noted or specified otherwise, screws fixing hardware or similar shall be of the same material

and finish as the hardware. Except where raised head screws are shown or specified, screws shall be countersunk flush or recessed where stopped/filled.

Bolts

Where bolts are used they shall be complete with nuts and washers unless specified otherwise. All bolts, nuts and washers are to be hot-dipped galvanised finish unless noted otherwise. The diameter of a hole for a bolt shall not be less than the bolt diameter nor exceed it by 1.5mm.

For the following bolt diameters use washer sizes as below unless noted otherwise on the drawings:

up to M8 - 25x 25 x 1.5mm
up to M12 - 50 x 50 x 3mm
up to M20 - 65 x 65 x 5mm
up to M20 - 75 x 75 x 6mm

Round washers may be used proving they are of a thickness and area not less than those specified above.

Subfloor framing - unless noted otherwise on the drawings, cast-in holding down bolts for subfloor framing fixed to concrete foundation walls shall be M12 Grade 304 stainless steel, embedded minimum 150mm into concrete, to the spacings required by NZS 3604, and located centrally on the timber.
Bottom plates - unless noted otherwise on the drawings, cast-in holding down bolts for bottom plates fixed to a concrete slab shall be M12 galvanised, embedded minimum 120mm into concrete, to the spacings required by NZS 3604, and located centrally on the timber.
Framing - timber/timber and timber/steel - Unless noted otherwise on the drawings, M16, hot-dipped galvanised, hexagonal head mild steel and with 50 x 50 x 3mm washers.
Timber/concrete (dry situations) - Unless noted otherwise on the drawings, Ramset Trubolts, T12140 at maximum 900mm centres - for damp or exterior situations use stainless steel Trubolts.
Bolts shall be tightened until the washer just indents the timber surface. Exposed bolts shall be re-tightened just prior to Practical Completion to remove any slack consequent on timber shrinkage.
Allow to countersink bolt heads and nuts as necessary to clear linings.

Framing Hardware

Proprietary timber framing hardware and fixings, including multigrips, joist shoes, Z nails, gang nails and similar hardware, may be used where specifically approved, or where required on the drawings or by NZS 3604 schedules, in accordance with the manufacturer's requirements.
Proprietary timber framing structural brackets and ties, including post and bearer brackets, beam supports, angle brackets, tie cleats and similar hardware, shall be as noted on the drawings and installed in accordance with the manufacturer's requirements.
Refer to Metalwork or Structural Steel section of this specification for specific design engineered fabricated steel components that connect structural timber framing.

Powder Fastening Systems

Powder powered fasteners are not permitted for fastening structural timber framing unless specifically noted on the drawings. All applications are subject to specific approval.

Adhesives

Aliphatic PVA for dry timber applications - all other adhesives for timber jointing are subject to specific approval or as specified. Check surfaces are in appropriate condition to receive adhesive, and that adhesives are used strictly in accordance with the manufacturer's instructions. Clamp adhesive-jointed timber connections and check alignment of members before the adhesive has set.

4.4.8 Flashings

Flashings

Flashing materials shall be in accordance with the requirements of NZBC E2/AS1 Sections 2.2 Materials, 4.0 Flashings, Table 20 - Material Selection, Table 21 - Compatibility of Materials in Contact, and Table 22 - Compatibility of Materials Subject to run-off, and as noted on the drawings.
All flashings around windows, doors and other openings and apertures, at internal and external corners, inter-storey junctions, soffit junctions, and at junctions with other building elements and cladding systems, etc., shall all be carefully constructed, fixed and finished to the details shown on the drawings.

4.4.9 Sealants

Sealants

For critical joints such as primary water/weatherproofing seals, precast panels primary seals, structural floor slab control joints, structural glazing, immersion or hydrostatic pressure seals, etc., either use the sealant noted on the drawings or obtain a reputable sealant manufacturer's recommendation for the precise situation, and submit the manufacturer's specifications covering all relevant criteria and characteristics of the proposed sealant, primers, joint surfaces preparation, etc. to the Architect/Designer for review and confirmation to proceed.
If so requested, additionally submit a sample of the proposed sealant made up into a demonstration joint, incorporating the same materials, preparation, finish tooling, etc. After confirmation to proceed with the proposed sealant install a sample joint to approval, length approximately 2% of the overall length of the joints required, with a minimum length of two metres; when accepted this joint becomes the quality control sample for all subsequent similar joints.

For less critical joints such as those in covered or protected situations, and bathroom and kitchen ceramics and sanitaryware etc., either use the sealant noted on the drawings or select the sealant from a reputable manufacturer's range for the substrate materials involved, with due regard for the flexibility required, acid or neutral curing, mould resistance, paintability or clear or standard colours, slumping characteristics, temperature range expected, etc. - silicone, polymer or polyurethane sealants are anticipated.
For all simple gap-filling and draught sealing situations, either use the sealant noted on the drawings or select from a reputable manufacturer's range for a paintable acrylic sealant with good adhesion characteristics for the substrates involved - pay particularly care in the sealant selection where bare metal, polycarbonate, polystyrene or similar substrates or where bituminous-based membranes are adjacent or where exposure to solvents is possible.

All joint surfaces preparation and priming and all sealant application work shall be exactly in accordance with the sealant manufacturer's recommendations, and carried out by competent and

experienced applicators familiar with the materials and techniques required.
Ensure that the sealant is being used within the manufacturer's stated design parameters, particularly with regard joint design and anticipated cyclic movement.
Check that the joint faces are sound, completely dry, and frost free, clean and free of dirt, rust, oil, grease, laitance, etc., and they are primed to suit the surface porosity - particularly for critical locations.
Insert a polyethylene tape slip layer at the back of the joint or a closed cell polyethylene PEF backer rod where required and to the sealant manufacturer's recommendations. Mask off joint edges where a clean straight finish line is required.
Check the toxicity of the selected sealant and handle it appropriately. Check that the temperature during sealant installation is within the manufacturer's guidelines.
Apply the sealant and tool the filled joint's surface smooth and even, utilising a lubricant as necessary and strictly within the manufacturer's guidelines.
Remove any masking tape immediately after tooling, clean up all adjacent surfaces using the recommended cleaning agents as required, and protect the finished joint until the sealant has properly cured.

4.4.10 Exterior Finishing Trim

Fascias and Barges
Fascias and Barges to be Cedar, 35mm finished thickness. Grooved to receive soffit lining.

4.4.11 Interior Finishing Trim

Finishing General
All interior finishing trim shall be cut to the exact dimensions and fine sanded smooth, and with lightly sanded arrisses, and all fixed with plated finishing pins. Machine staple fixing is NOT acceptable.
Note that even traces of planer marks are unacceptable on architraves. Margins between interior trim and other elements shall be exactly even, and all mitres shall be exact and tight.

Scotia - option 1
No scotia (all square stopped).

Architraves - option 1
No architraves.

Skirting
Finger jointed pine Skirtings, Fine sanded for paint finish. 65x12 bevelled.

4.4.12 Garage Door

Garage Door - option 2
Garage door(s) as shown and noted on the drawings, installed complete.

4.4.13 Sundry Items

Sundry General

Supply and install, complete with all normal incidentals, and in total compliance with the item manufacturer's recommendations and instructions and with all of the appropriate preceding clauses:

Shelves & Cupboards - option 2

Wardrobe rails, shelves to wardrobes, linen cupboards, etc., as shown and noted on the drawings.

Glass Shower Screen

Supply and install the toughened glass shower screens to the shower room and/or bathroom, all as detailed and noted on the drawings.

Air Exhaust Fan Trimming Out - option 2

Carry out all trimming out, etc. required for installation of wet areas exhaust fans.

Free Standing Woodburner

Supply and install the free standing, domestic solid fuel woodburner, as specified, to the location and details shown on the drawings, complete with flue, flue-pipe casing, flue-mounted heat shield, ceiling plate and all other necessary incidentals and accessories for proper installation. Installation shall be exactly in accordance with the manufacturer's requirements, AS/NZS 2918, and as shown on the drawings; including flue bracing and support, and with the penetration through the roofing fully flashed and weathertight.

Ceiling Access Hatch

Supply and install the proprietary ceiling access hatch, as specified or scheduled, to the location and details shown on the drawings in accordance with the manufacturer's requirements.

Skylights

Supply and install proprietary skylights and or daylighting systems, as specified and/or scheduled, to the locations and details shown on the drawings. Installation shall be exactly in accordance with the manufacturer's requirements and as shown on the drawings.

Skylight penetrations in the roof shall be carefully formed, accurately sized and trimmed, with the roof underlay neatly cut, folded and dressed, and the roof cladding fully supported, fixed and correctly flashed around the skylight in accordance with the roof cladding manufacturer's requirements.

Form any required upstand to the dimensions as detailed, and finish and flash the roof cladding and underlay around the upstand to the details shown on the drawings.

Form and trim ceiling openings, and line and finish the skylight void sides to the required opening size and as detailed. Reinstate any roof/ceiling insulation around the installed opening without voids or gaps.

4.5 Timber Framing

4.5.1 Scope

Scope

Supply and install timber framing to the floors, walls, roofs, and other timber framed elements, as identified and detailed on the drawings. All aspects of this work shall be in accordance with NZS 3604, product manufacturers' recommendations, and as shown on the drawings and the specification.

4.5.2 Workmanship

Workmanship

Where required by the NZ Building Act 2004 it is the building contractor's responsibility to ensure that all restricted building work is carried out by a Licensed Building Practitioner.

All work shall be carried out to current best trade practise by experienced and competent tradesmen, familiar with the materials and installation techniques, in accordance with NZS 3604 and as shown on the drawings.

Co-operation

Co-operate with other trades to ensure that all preliminary and preparatory works are completed to specification and as shown on the drawings prior to installing timber framing.
Co-ordinate with other trades to install timber framing as required.

4.5.3 Timber Framing

Timber Grade and Quality

Unless otherwise noted or specified on the drawings or specification, all framing timber shall be minimum structural grade SG 8 Radiata pine in accordance with NZS 3622.
Framing timber shall be seasoned or kiln dried, and be straight and true and free from wind, warp and distortion, and in lengths suitable for the members required, and shall have a moisture content of between 12% and 18% before installation.
Do not used damaged, faulty or defective materials.

Timber Treatment

All non-durable timber framing shall be appropriately treated against moisture and/or insect decay by treatment plants with recognised quality assurance systems that are administered by the Timber Preservation Council (NZTPC). Treatment of timber and wood-based building products shall be to the requirements of NZS 3602 as an absolute minimum, and all treated timber shall be identified and marked as required.
Carefully manage treated framing during installation to avoid accidental use of timber with a lower performance or durability treatment than that required or specified.

Storage & Handling

Check timber framing upon delivery and reject sub-standard or damaged material.
Store timber framing dry under cover, fillet stacked and well clear of the ground, and protect from damage, moisture, and contamination.

Ensure all appropriate personal protection equipment is worn at all times when handling and cutting treated framing.

Framing Installation

All timber framing members, including all dwanging, strutting, blocking, bracing etc, shall be sized, setout, fitted and fixed to the requirements of NZS 3604 and as shown on the drawings to accommodate structural loadings, cladding and lining setout and support, and the installation of other building components, fixtures and fittings.

All framing shall be erected without deviation, true to line, level, angle and plumb, and evenly aligned and square, and within the tolerances allowed in NZS 3604 Table 2.1. Framing members accurately cut, lapped, housed, joined, and seated so as to provide full contact over the bearing surfaces.

Temporarily prop, brace, tie, and secure framing members and elements as required until the framing is complete and self supporting. Leave in place for safety purposes as long as required.

Protect timber framing as required during installation against damage and moisture, and against significant variation of moisture content until ready for lining. Avoid ponding of water around floor plates.

Concrete Separation

Separate timber framing with an approved continuous damp proof course when in direct contact with concrete or masonry. Ensure that the DPC material is compatible with the timber treatment.
Free draining separations to external vertical faces shall be 12mm minimum and as noted on the drawings.

Timber Re-treatment

All cut or drilled surfaces of H4 and H5 treated timber framing shall be flood coat re-treated, with a suitable product recommended by the original treatment plant, before installation.

Edge Notching and Centre Holes

The notching, checking, and boring of framing members shall be in strict accordance with the requirements of NZS 3604.
Avoided checking and cutting where possible and keep to such dimensions so as not to prejudice the purpose for which the member is used. Keep edge notching to a minimum and where possible use centrally bored holes instead.
Concealed services pipes and wiring shall not project beyond the framing face and where possible shall be beyond the lining's fixing reach.

Framing Protection

Protect timber framing as required during installation against damage and moisture, and against significant variation of moisture content until ready for lining. Avoid ponding of water around floor plates.

Built-up Framing Members

Except for jack studs, bottom plates and top plates, framing members may be substituted with built-up members in accordance with the limitations of NZS 3604 2.4.4.7 with the prior approval of the Architect/Designer only.

4.5.4 Steel Fixings

Fastenings and Connectors

Unless otherwise noted or specified, timber framing fastenings and connectors shall be as specified in the relevant fixing schedules of NZS 3604 or have an equivalent capacity as specified therein. Timber framing connectors and fixings shall comply with the product information as required in NZS 3604 2.4.6, and shall be used and installed in accordance with the manufacturer's recommendations. Pre-drill nail holes in split-prone framing as necessary.

Durability of Fixings & Fastenings

Unless otherwise noted or specified, the minimum durability of timber framing fixings and fastenings, excluding nails and screws, shall comply with the durability requirements of NZS 3604 Table 4.1.
Galvanised steel fixing components, excluding nails and screws, shall have galvanised coating masses in accordance with NZS 3604 Table 4.2.
Unless noted or specified otherwise, the materials for nails and screws shall be as given in NZS 3604 Table 4.3.
Steel fixings and fastenings in contact with timber treated with copper based timber preservatives (H3.2 or higher) shall be in accordance with NZS 3604 4.4.4.
Stainless steel nails shall be minimum Grade 304 unless otherwise specified or noted.

Bolts and Coachscrews

Unless specified or shown otherwise, all bolted and coach screwed connections shall be M12 or M16 in accordance with the relevant fixing requirements given in NZS 3604.
Bolted and coach screwed connections shall have either a 50mm x 3mm square, or a 55mm x 3mm round, washer to each head and nut for M12 and M16 fixings. Washers shall be of the same material and durability as the bolt or coach screw.

4.5.5 Floor Framing

Floor Joists - 1.5 kPa & 2 kPa Floors

Unless specified or shown otherwise, timber floor joists shall be to the dimensions and spacings given in NZS 3604 Table 7.1.
Floor joists shall be laid on edge true to line and level, have a minimum support bearing of 32mm (except when cantilevered), and so that any crook will straighten under load.
Floor joists shall be jointed over supports (except when cantilevered beyond the support) in accordance with NZS 3604 7.1.1.7.

Boundary Joist - Lateral Edge Support

Unless specified or shown otherwise, boundary joists shall be continuous and match joist specification as lateral support, and fixed to each end of the floor joists in accordance with NZS 3604 Table 7.5.

Solid Blocking - Lateral Edge Support

Unless specified or shown otherwise, solid blocking shall be 45mm thick x joist depth and installed between joist ends at maximum 1.8m centre spacings as lateral edge support, and fixed in accordance with NZS 3604 Table 7.5. Floor joists supported by by a foundation wall shall have solid blocking over a distance of minimum 1.8m at joist ends.

Support for Load Bearing Walls

Load bearing walls parallel to joists shall be supported by double joists centred maximum 200mm from the centre of a pile row running parallel with the joists.

Support for Non-load Bearing Walls without Bracing Elements

Non-load bearing walls, without a bracing element, within 150mm and parallel to a floor joist, shall be supported by minimum 90mm x 45mm solid blocking on-edge at maximum 1.2m centres and at each side of door openings.

Support for Non-load Bearing Walls with a Bracing Elements

Non-load bearing walls, with a bracing element, parallel to floor joists and not supported by a floor joist, shall be supported by minimum 90mm x 45mm solid blocking on-edge at maximum 1.2m centres and at each side of door openings.

Trimmers Fixed to Trimming Joists - Connectors

Unless specified or shown otherwise trimmers shall be fixed to trimming joists by proprietary joist hangers in accordance with NZS 3604 7.1.6.5(b).

4.5.6 Wall Framing

Plates

Top and bottom plates shall be to the dimensions and layout shown on the drawings. Unless specified or shown otherwise, top and bottom plates shall be fixed in accordance with NZS 3604 7.5.12 and Tables 8.18 and 8.19, true to line and level or angle.

Joints in top plates shall be made over a stud or over blocking between studs, and all top plate connections shall be in accordance with NZS 3604 8.7.3. Form all holes and edge notches in top and bottom plates in accordance with NZS 3604 8.7.5.

Studs

Studs shall be to the dimensions and spacings shown on the drawings, and installed true to line and plumb in both directions between top and bottom plates.

Unless noted otherwise, non-load bearing wall studs shall be to the spacings given in NZS 3604 Table 8.4, stud width as shown on the drawings.

Form all holes and edge notches in studs in accordance with NZS 3604 8.5.1.5. Do not notch, check, cut, or bore holes in the middle third of any trimming stud.

Should the need arise, studs shall be straightened in accordance with NZS 3604 8.5.3 with prior approval from the Architect/Designer only.

Unless noted otherwise, studs in loadbearing walls for 3 kPa floor loads shall be in accordance with NZS 3604 Table 14.10.

Lintels

Lintels shall be to the dimensions and locations shown on the drawings, and installed true to line and level, and shall be supported by a 45mm thick doubling stud or jack stud fixed to a trimming stud, and secured against uplift in accordance with NZS 3604 8.6.1.8 as required.
The thickness of a lintel may be made from two or more members, where each member is the length of the lintel, in accordance with NZS 3604 2.4.4.7.

Sill & Head Trimmers

Unless specified or shown otherwise, sill and head trimmers to openings shall be the same width as the wall stud and to the thickness given in NZS 3604 Table 8.15, and installed at the required opening height true to line and level, and supported by a 45mm thick doubling stud or jack stud fixed to a trimming stud.

Dwangs

Dwangs shall be the same width and thickness as the wall stud, and installed at the centres noted on the drawings, and accurately cut and fixed in place true to line and level and flush with stud edges. Dwangs fixed in accordance with NZS 3604 Table 8.19.

4.5.7 Roof Framing

Purlins

Purlins shall be to the dimensions and spacings shown on the drawings and as required by the cladding material, and fixed to rafters and/or trusses in accordance with NZS 3604 Table 10.10 (purlins on their flat) and/or Table 10.11 (purlins on their edge).
Purlins on their flat shall be continuous over a minimum of two spans.
Provide all necessary blocking and lateral support to purlins laid on edge in accordance with NZS 3604 10.2.1.16.6, and as detailed.
Extend purlins to form gable verges as detailed and in accordance with NZS 3604 10.2.1.15.

Roof Trusses

Roof trusses shall be Specific Engineering Design (SED) in accordance with NZBC B1/VM1 and manufactured by an accredited fabricator, and shall comply with all aspects of NZS 3604 10.2.2. Roof trusses shall be fabricated to meet the specific design requirements of the roof including, but not limited to; roof layout, pitch, and details, in accordance with the drawings and specification.
Roof trusses shall be supported and fixed to the truss fabricator's specifications but shall be no less than that required by NZS 3604 Tables 10.14 and 10.15. Roof trusses shall be braced as shown on the drawings and in accordance with NZS 3604 10.3.

Roof Bracing

Roof bracing shall be as shown on the drawings and in accordance with NZS 3604 10.3 and 10.4 as necessary.

4.5.8 Ceiling Framing

Ceiling Framing

Ceiling framing shall be to the dimensions, layout, spacings, and details shown on the drawings, and shall be installed true to line, level and plane, and securely fixed in accordance with NZS 3604 Table 13.3.

4.6 LVL Engineered Framing

4.6.1 Scope

Scope

Supply and install the selected Carter Holt Harvey Woodproducts LVL products, complete with all accessories, to the floors, walls, roofs and other areas as identified on the drawings. All aspects of this work shall be in complete accordance with CHH Woodproducts LVL product installation guides, technical manuals and specifications (check www.chhwoodproducts.co.nz for the latest editions), and other relevant product manufacturer's recommendations, and as shown on the drawings.

No substitutions are permitted for CHH Woodproducts LVL products.

4.6.2 Co-operation

Co-operation

Co-operate with other trades to ensure that all preliminary and preparatory works are completed to specification and as shown on the drawings.

4.6.3 Product

hySPAN, Untreated

hySPAN (untreated).

4.6.4 Delivery & Handling

Delivery & Handling

Check for damage upon delivery and reject damaged items. Handle and move LVL in accordance with the manufacturer's recommendations carefully using appropriate slings and strops to ensure safe handling and to prevent damage to the members. Store LVL under cover, away from damage, on level gluts, well clear of the ground. Keep dry and protect from damage until installation. Use personal protection equipment and tag lines as appropriate when handling at heights.

4.6.5 Workmanship

Workmanship

All installation work shall be carried out by experienced and competent tradesmen who are familiar with the specified products and installation techniques.
Avoid damaging LVL products during installation, do not use damaged or faulty products and materials.

4.6.6 Treatment

Treatment

Timber treatment shall be to the requirements of NZS 3602. Refer to the drawings for the locations of timber framing treatment classes.

4.6.7 Preparation

Preparation

Check that all support framing is complete, true and plumb, is correctly fixed and secured, is to the design requirements, and as shown on the drawings. Make ready any temporary propping and bracing as required prior to installation.

4.6.8 Installation

Installation

Carefully lift into place without over stressing LVL members. Fix members in place to the spacings, spans and seating details as shown on the drawings and to the manufacturer's design requirements. Accurately cut members for neat fitting where LVL is to be cut to length. Do not cut hyCHORD truss chords without the manufacturer's specific approval. Cutting and resealing of LVL members, including cuts to member ends, notching, holes, ripping, and temporary support requirements shall be in strict accordance with the manufacturer's design requirements and the drawings. Ensure LVL members are installed true to line, plumb, evenly aligned and square. Complete all other integral and associated framing to the manufacturer's design requirements and as shown on the drawings for that section of work.

4.6.9 Protection

Protection During Construction

Reasonable effort should be made to protect the LVL during construction in order to minimise swelling and distortion due to moisture uptake. Protection methods such as protecting edges and ends of LVL with strips of building paper can minimise uptake of moisture. Should LVL be exposed for long periods of time and take up external moisture, it is recommended that long spanning or heavily loaded members are temporarily propped until moisture content returns to below 18%. Alternatively designers can allow for higher creep deflections in their designs if there is reasonable potential for LVL to get wet during construction and propping is not an option.

4.6.10 Fixings

Fixings

All fixings and fastenings, including nails, screws, bolts, washers, plates, straps, hangers and stiffeners etc, to be strictly in accordance with NZS 3604 requirements and schedules, CHH Woodproducts LVL design requirements and as noted on the drawings.

4.6.11 Completion

Completion

Check that all CHH Woodproducts LVL items have been fixed correctly, that all seating and bearing supports have been completed correctly, and that all holes, notching and end cuts are resealed to the manufacturer's requirements. Check members are true to line, plumb and aligned, and correct if necessary. Check that no damage has occurred to any member or fastening component and replace as necessary. Remove temporary propping at the scheduled time. Remove all waste from the site.

4.7 Thermakraft Underlay, DPM & DPC

4.7.1 Scope

Scope

Supply and install the selected Thermakraft Industries Underlays and Membranes to the locations identified on the drawings, complete with all accessories. All aspects of this work shall be in complete accordance with Thermakraft Industries Ltd technical information and installation requirements (check www.thermakraft.co.nz, or call 0800 806 595 for the latest editions), other relevant product manufacturers' recommendations, and as shown on the drawings.

No substitutions are permitted for Thermakraft Industries Underlays and Membranes.

4.7.2 Damp-Proof Membrane

Thermathene Black (250um)

Thermathene Black (250um). A 250 micron thick (0.25mm), tear resistant, polyethylene film sheet concrete underlay. Coloured black.

Installed over nominal 10mm (max. 25mm) thick compacted sand blinding layer, over a properly prepared base course, as a moisture vapour barrier under concrete slabs on-ground (prior to concreting), in accordance with the manufacturer's requirements and as shown on the drawings.

All joints lapped 200mm and continuously sealed with Thermakraft White General Purpose Tape. Tape-seal around penetrations. Inspect immediately before pouring concrete and repair any holes or other damage.

Installed Location:

4.7.3 Damp-Proof Course

Supercourse 500 DPC

Supercourse 500 DPC. A 0.75mm thick, high-impact, single-layer Polyethylene film, embossed on both sides. Available in 50mm 75mm, 90mm, 100mm, 150mm, 200mm, 250mm, 300mm and 1000mm roll widths.

Used as a general damp proof course (DPC) for separating timber and wood-based products and metal from concrete, masonry, brick, and stone surfaces, and as a moisture barrier.

Also used as a concealed flashing behind brick veneer cladding in accordance with NZS 4229 and NZBC E2/AS1.

Installed in accordance with the manufacturer's requirements, BRANZ Appraisal No.329 (2005) and as shown on the drawings.

4.7.4 Roof Underlay

Covertek 407 - Synthetic Roof Underlay

Covertek 407. A self-supporting, fire-retardant, absorbent, breathable, synthetic non-woven polyolefin underlay. Nominal weight 220g/m².

Covertek 407 is CodeMark assured with the NZ Building Code: CodeMark Certificate of Conformity No:GM-CM30028 (Rev B), issued by Global-Mark Pty Ltd.

Installed as a roof underlay over timber or steel roof framing in accordance with the manufacturer's requirements and BRANZ Appraisal No.651 (2009).

Covertek 407 roof underlay can be used directly under direct-fixed roof claddings, or directly under roof cavity battens or tile battens in accordance with Thermakraft requirements.

Covertek 407 roof underlay must installed in a manner that prevents ponding of water. Provide additional support at no more than 300mm centres when Covertek 407 is installed on roofs with slopes less than 10°.

Do not leave Covertek 407 exposed on roofs for more than a total of 7 days before covering.

Installed Location:

4.7.5 Underlay Support

Thermastrap 201 Polypropylene Strapping

Thermastrap 201. A 19mm wide x 0.4mm thick polypropylene embossed strap. for use as a support for non-self support roof underlays, and to restrict insulation bellowing of flexible wall underlays in drained cavity applications. Suitably tensioned when installed to avoid any sagging and to keep the roof underlay in a flat plane, fixed at right angles to the purlins at maximum 300mm centres.

Installed Location:

4.7.6 Co-operation

Co-operation

Co-operate with other trades to ensure that all preliminary and preparatory works are completed to specification and as shown on the drawings.

Coordinate with other trades to install Thermakraft Underlays, DPMs, and DPCs as required.

4.7.7 Workmanship

Workmanship

Where required by the NZ Building Act 2004 it is the building contractor's responsibility to ensure that all restricted building work is carried out by a Licensed Building Practitioner.

All installation work shall be carried out by experienced and competent tradespersons, familiar with the specified products and installation techniques, in accordance with the manufacturer's requirements, and to fully comply with all warranty requirements.

All cutting, joining, and fixing techniques shall be exactly as recommended by the manufacturer, and carried out with the use of suitable tools and equipment appropriate for the application. All work shall be such as to leave a neat, efficient, and weathertight installation.

4.7.8 Delivery & Handling

Delivery & Handling

Store underlay rolls on end, undercover, on a flat, clean and dry surface. Keep stored materials dry and protected from damage and contamination at all times.

Handle materials in accordance with the manufacturer's requirements and in a manner that prevents damage to or deterioration of the materia.

Do not used damaged or defective materials, or products that are beyond their designated shelf life.

Installers shall be familiar with and comply with the manufacturer's safe handling requirements and precautions for use, and shall use appropriate safety gear when handling materials.

Installers shall conform with all relevant WorkSafe NZ Guidelines and Codes of Practice - including the Best practice guidelines for working on roofs and the OSH Guidelines For the Provision of Facilities and General Safety in the Construction Industry.

4.7.9 Preparation

General

Prior to installation, carry out all necessary inspections and preparatory work required, and ensure that all preliminary works by other trades has been completed to specification and as shown on the approved drawings.

Do not commence installation until all necessary preliminary works by others is complete and to the required standard. The commencement of work shall be deemed to indicate full acceptance by the installer that all preliminary works by other trades is complete.

Supporting timber structures shall comply with NZS 3604, or with NZS 3603 and AS/NZS 1170 for specific design, and have a maximum moisture content in accordance with the requirements of NZS 3602 at the time of installation.

Supporting lightweight steel framed structures shall comply with NASH 3405, or the NZBC for specific design.

Supporting steel structures shall comply with NZS 3404.

Timber Framing

Timber Framing - check all aspects of preparatory works, including but not limited to:
- Check that timber framing has been completed as shown on the drawings, complies with NZS 3604 or AS/NZS 1170 for specific design for timber framing, and is in accordance with Thermakraft requirements.
- Check that framing is securely fixed, true to line and plane, is plumb and level where required, and is trimmed at edges, openings and penetrations as required.
- Check that timber framing has a maximum moisture content of 20% at the time of installation.
- Check that there are no projections due to structural bracing and bracketry etc.

4.7.10 Roof Underlay Installation

Covertek 407 Roof Underlay

Covertek 407 Roof Underlay shall be installed without support on roofs with slopes 10° or greater (unless specified otherwise), run horizontally across the roof slope and over the purlins, starting from the gutter/lowest point up to the ridge/highest point, extending maximum 20mm into gutters, with minimum 150mm side and end laps, lapped such that any water will be shed to the outside of the underlay, and sufficiently tensioned without sagging.

Fix at maximum 300mm centres to purlins, with 8-12mm stainless steel staples or 20mm large-head galvanised clouts or galvanised proprietary grippers.

Finish Covertek 407 underlay along roof edges and junctions, valley gutters, and at the ridge as shown on the drawings. Carefully cut underlay at roof openings at 45º angle away from each corner and lap-tape closed to framed up-stands, ducts and other services penetrating the underlay in accordance with Thermakraft requirements and as detailed. Leave underlay minimum 50mm distance clear of the outer liner of flue stacks.

4.7.11 Completion

Completion

Check that all underlays have been installed correctly and are properly supported, and that all underlay edges, joins and ends are correctly finished prior to closing off with claddings - all in accordance with Thermakraft installation requirements.

Check installed membranes and underlays for defective work and damage - replace and/or repair as necessary to the required standard.

Leave all of this work complete, and free of defects, and to the required standard in accordance with the manufacturer's warranty requirements.

Issue to the Owner a copy of the Thermakraft maintenance requirements and the Thermakraft product warranties for the installed products.

4.8 Secura Flooring

4.8.1 Scope

Secura Interior Flooring for Interior Installations

Supply and install 19mm thick Secura Interior Flooring to the floors identified on the drawings, complete with all accessories, ready to be overlaid with a trafficable flooring finishing product. All aspects of this work shall be in complete accordance with Secura Interior Flooring Installation Manual (check www.jameshardie.co.nz, or call 0800 808 868 for the latest edition) and other relevant product manufacturers' recommendations.

4.8.2 Co-operation

Co-operation General

Co-ordinate with other trades to ensure that appropriate clearances are allowed from adjacent linings, framing, and associated elements, and that the sheets correctly allow for the flooring system installation.

Ensure that services penetrations are correctly handled to maintain full watertightness and sheet integrity.

Ensure that other trades are aware of the James Hardie Safe Working Practices.

Co-operation for Tiling Situations

Prior to the installation, discuss the proposed sheet installation generally with the tiling contractor, with special regard to the control joint layout. Confirm the location of all control joints, and agree that they will perform correctly and that they are in accordance with the tile module, the drawings, and the Installation Manual. Bring to the attention of the designer any joints that are not in accordance, or joints that may be compromised by other building elements, and take instruction accordingly. Confirm with the tiling contractor that the specified flexible sealant is fully compatible with the membrane product.

4.8.3 Preparation

Preparation

Check that the timber framing elements are in accordance with NZS 3604, or in accordance with NZS 3603 and AS/NZS 1170 for specific design, and the joist spacings are maximum 450mm centres in accordance with James Hardie installation requirements. Framing shall be in true alignment, complete and suitable for the sheets, and maximum moisture content as per NZS 3602. Ensure that the framing is true in line with no projections due to structural and bracing bracketry etc. Ensure that the bottom plate hold-downs are correctly installed. Check junctions to all other building elements and ensure that all necessary works have been completed that will enable the sheets and all accessories to be installed.

4.8.4 Flexible Sealant

Flexible Sealant (edit)
Flexible sealant to be:

Use to seal the sheets and accessories in accordance with the sealant manufacturer's recommendations and to James Hardie requirements. Seal the T & G joint after sheet installation before tiling or waterproofing. Ensure sealant compatibility with overlay.

4.8.5 Adhesive Sealant

All JH-Recommended Adhesive Sealants
Adhesive to be BOSTIK Seal 'N' Flex 1 or SIKA Silaflex 11FC. Use to adhere the sheets to the framing in accordance with the adhesive manufacturer's recommendations and to James Hardie requirements. Ensure sealant compatibility with overlay.

4.8.6 Workmanship

Secura Interior Flooring for Interior Installations
All installation work for the flooring sheets shall be carried out by an LBP, or supervised by an LBP, in accordance with Secura Interior Flooring Installation Manual and other relevant product manufacturers' recommendations.

4.8.7 Delivery & Handling

Delivery & Handling
Carry all sheets on edge. Stack sheets flat on a level platform off the ground ie. use the supplied delivery pallet on level ground (if no pallet then evenly spaced bearers on level ground at 600mm crs maximum). Keep sheets and accessories dry at all times. Avoid damage to sheet edges, ends, and surfaces. Keep accessories out of direct sunlight, and store all accessories on flat and avoid damage to any. All installers to be familiar with and comply with the James Hardie Safe Working Practices in the Installation Manual, to use appropriate safety gear, and in particular to be aware to avoid breathing silica dust. Do not use any damaged or blemished sheets or accessories.

4.8.8 Installation

Install to Framing
Install the sheets to the framing in accordance with the Installation Manual, complete with all accessories eg. mouldings, sealant, adhesive, underflashings, etc.

Control Joints
Control joints to be formed on framing to the locations identified on the drawings, in accordance with the Installation Manual.

Sealing around Penetrations
Seal around services penetrations to maintain watertightness.

4.8.9 Fixings

Class 4 Screws and Adhesive

Fix sheets with Class 4 screws and adhesive in accordance with Secura Flooring requirements.

Stainless Steel Screws (304) and Adhesive

Fix sheets with Grade 304 stainless steel screws and adhesive in accordance with Secura Flooring requirements.

4.8.10 Completion

Completion General

Ensure that the sheets have been fixed correctly, and that all joints and accessories and penetrations have been completed correctly. Check that no damage has occurred to any installed sheet element or associated component, replace as necessary. Ensure that the sheets are overlaid with the flooring system within 90 days of the sheet installation, complete with all accessories.

Completion for Secura Interior Flooring

Hand over a copy of the latest edition of the Secura Interior Flooring Product Warranty to the client. Hand over a copy of the latest Secura Interior Flooring Installation Manual to the client for their maintenance information.

4.9 James Hardie Pre-Cladding

4.9.1 Scope

HomeRAB Pre-Cladding

Supply and install HomeRAB Pre-Cladding fibre-cement sheet as a rigid air barrier to the walls identified on the drawings, complete with all accessories. All aspects of this work shall be in complete accordance with James Hardie Rigid Air Barriers Installation Manual (check www.jameshardie.co.nz, or call 0800 808 868 for the latest edition), BRANZ Appraisal No.611 (2011), and other relevant product manufacturers' recommendations.

4.9.2 Elements

HomeRAB Pre-Cladding as a Component of a Bracing Element

To the areas noted as 'Bracing' on the drawings, additionally comply with all relevant aspects of the James Hardie Bracing Design Manual (check on 0800 808 868 for the latest edition) and other relevant product manufacturers' recommendations.

4.9.3 Co-operation

Co-operation

Co-ordinate with other trades to ensure that appropriate clearances are allowed from roofing products and associated flashings etc, that the panels correctly allow for door and window installation, and that services penetrations are correctly handled to maintain full weathertightness and panel integrity.

Ensure that other trades are aware of the James Hardie Safe Working Practices.

4.9.4 Preparation

Preparation

Check that the timber framing elements are in accordance with NZS 3604, or in accordance with NZS 3603 and AS/NZS 1170 for specific design, and in accordance with James Hardie requirements. Framing shall be plumb and in true alignment, complete and suitable for the panels, and maximum moisture content as per NZS 3602. Ensure that the framing is true in line with no projections due to structural and bracing bracketry etc. Ensure that the bottom plate hold-downs are correctly installed.

Check that the ground levels are sloping away from the building in accordance with E1/AS1, with no ponding water against the building, and that the ground will be remain clear of the sheet by at least 100mm at all times.

4.9.5 Workmanship

Workmanship

All installation work shall be carried out by an LBP, or supervised by an LBP, in accordance with James Hardie Rigid Air Barriers Installation Manual and other relevant product manufacturers' recommendations.

4.9.6 Delivery & Handling

Delivery & Handling

Carry all sheets on edge. Stack sheets flat on a level platform off the ground eg., use the supplied delivery pallet on level ground, or minimum 4 evenly spaced bearers on level ground. Keep sheets and accessories dry at all times. Avoid damage to sheet edges, ends, and surfaces. Keep uPVC flashings and jointers out of direct sunlight, and store all accessories on flat and avoid damage to any. All installers to be familiar with and comply with the James Hardie Safe Working Practices in the Installation Manual, to use appropriate safety gear, and in particular to be aware to avoid breathing silica dust. Do not use any damaged or blemished sheets or accessories.

4.9.7 Installation

HomeRAB Pre-Cladding

Fix sheets vertically directly to framing in accordance with the Installation Manual.

Vertical joints on framing to be sealed with a joint sealing tape, for both non-bracing and bracing applications.

Vertical joints off framing formed with a uPVC jointer, for non-bracing applications only. Jointer to be in a single piece extending from bottom of board to top of board with no joins.

Ensure that all cut edges of sheets where exposed are primed prior to installation with Dulux Primacryl, Resene Quick Dry, or similar. Ensure that the bottom edge of the sheet overhangs below the bottom plate by 15mm, and is clear of the ground surface by at least 100mm; the finished ground

clearance shall be in accordance with E2/AS1. Install flexible flashing tape to all junctions and penetrations (including cables etc), with the addition of a pipe bandage for pipes to maintain weathertightness and air pressure resistance. Do not use sealant.

4.9.8 Horizontal Joints

All Durability Zones
Horizontal joints to be formed at floor joist level with a uPVC flashing. Ensure that the sheets are not fixed to the floor joists.

4.9.9 Fixings

Durability Zone D or Geothermal, or for Bracing Installations
Fix sheets with Grade 304 stainless steel nails in accordance with James Hardie requirements.

4.9.10 Completion

Completion, HomeRAB Pre-Cladding
Ensure that the sheets have been fixed correctly, that all vertical joints and horizontal joints have been completed correctly, and that all penetrations have been taped correctly. Check that no damage has occurred to any installed sheet element or associated component, replace as necessary. Check that no dirt has been mounded up within 100mm of the sheet, and maintain the clearance. Ensure that the cladding is installed within 90 days of the sheet installation. Hand over a copy of the latest edition of the James Hardie Rigid Air Barriers Product Warranty to the client.

4.10 Ecoply Bracing

4.10.1 Scope

Scope
Supply 7mm or thicker Ecoply or Shadowclad structural plywood and install it as structural bracing or ceiling diaphragm in the positions identified on the Bracing Plan.

4.10.2 Preparation

Preparation
Check that the timber wall framing complies with NZS 3604, is plumb and in true alignment, and has a maximum moisture content of 20% at the time of Ecoply Bracing installation. Ensure that the bottom plate hold-downs are correctly installed. Upon delivery store plywood on four evenly spaced level bearers, and protect the plywood from rain dirt etc. Ecoply Bracing installation work shall be carried out by competent tradesmen.

4.10.3 Installation

Direct Fix, Timber Frame, Durability Zone B or C
Handle the plywood carefully, and reject any damaged sheets. Fix sheets vertically, incorporating 2 - 3mm expansion gaps at joins. All sheet edges fully supported. Install with cut sheet ends to the top.

Fasten with 50 x 2.8mm galvanised flat head nails for direct fix. Refer to the Ecoply Specification and Installation Guide for preservative treatment and fastener durability requirements. Fix at 150mm centres around the perimeter of each sheet and 300 mm centres to intermediate studs. Ensure that base clearances to E2/AS1 are provided.

Where Shadowclad plywood is used as both cladding and bracing refer to the Shadowclad Specification and Installation Guide for durability requirements. (Ph 0800 326 759 to confirm the date of the most recent edition).

4.11 Linea Weatherboard

4.11.1 Scope

Linea Weatherboard 135mm

Supply and install Linea 135mm Weatherboards as a fibre-cement weatherboard cladding material to the walls identified on the drawings, complete with all accessories. The Linea Weatherboards are to be finished with a paint system. All aspects of this work shall be in complete accordance with Linea Weatherboard Technical Specification (check www.jameshardie.co.nz, or call 0800 808 868 for the latest edition), Linea BRANZ Appraisals, and other relevant product manufacturers' recommendations.

James Hardie Linea Weatherboard Direct Fixed and Cavity Cladding is CodeMark assured with the NZ Building Code: CodeMark Certificate of Conformity No:GM-CM30018 (Rev E), issued by Global-Mark Pty Ltd.

4.11.2 Elements

Linea for Bracing Elements

To the areas noted as 'Bracing' on the drawings, additionally comply with all relevant aspects of the James Hardie Bracing Design Manual (check on 0800 808 868 for the latest edition) and other relevant product manufacturers' recommendations.

4.11.3 Co-operation

Co-operation

Co-ordinate with other trades to ensure that appropriate clearances are allowed from roofing products and associated flashings etc, that the panels correctly allow for door and window installation, and that services penetrations are correctly handled to maintain full weathertightness and panel integrity.

Ensure that other trades are aware of the James Hardie Safe Working Practices.

4.11.4 Preparation

Preparation

Check that the timber framing elements are in accordance with NZS 3604, or in accordance with NZS 3603 and AS/NZS 1170 for specific design, and in accordance with James Hardie requirements.

Framing shall be plumb and in true alignment, complete and suitable for the weatherboards, and maximum moisture content as per NZS 3602. Ensure that the framing is true in line with no projections due to structural and bracing bracketry etc. Ensure that the bottom plate hold-downs are correctly installed.

Check that the building underlay or rigid air barrier has been installed in full accordance with the manufacturer's requirements and the drawings, and completely finished to all penetrations including doors, windows, services, etc. Check junctions to all other building elements and ensure that all necessary works have been completed eg. flashings etc that will enable the weatherboards and all accessories to be installed.

Check that the ground levels are sloping away from the building so that there will be no ponding water against the building, and that the ground will be remain clear of the weatherboards by at least 100mm at all times in accordance with E2/AS1.

4.11.5 Sealants

SIKA Silaflex MS

Flexible silicone sealant to be SIKA Silaflex MS. Use to seal the weatherboards and accessories in accordance with the sealant manufacturer's recommendations and to James Hardie requirements. Ensure sealant compatibility with selected finish.

4.11.6 Workmanship

Workmanship

All installation work shall be carried out by an LBP, or supervised by an LBP, in accordance with Linea Weatherboards Technical Specification and other relevant product manufacturers' recommendations.

4.11.7 Delivery & Handling

Delivery & Handling

Carry all boards on edge. Stack boards flat on a level platform off the ground ie. use the supplied delivery pallet on level ground (if no pallet then evenly spaced bearers on level ground at 600mm crs maximum). Keep boards and accessories dry at all times. Avoid damage to board edges, ends, and surfaces. Keep uPVC flashings etc out of direct sunlight, and store all accessories on flat and avoid damage. All installers to be familiar with and comply with the James Hardie Safe Working Practices in the Installation Manual, to use appropriate safety gear, and in particular to be aware to avoid breathing silica dust. Do not use any damaged or blemished weatherboards or accessories.

4.11.8 Installation

Cavity Fix

Fix uPVC vent strip through the building underlay or rigid air barrier. Ensure that the openings in the vent strip are kept clear and unobstructed at all times. Fix H3.1 timber cavity battens through the building underlay or rigid air barrier to the framing. Install the weatherboards through the cavity battens and building underlay or rigid air barrier to the framing in accordance with the Technical Specification and BRANZ Appraisal No.447 (2010), complete with all accessories eg. corner mouldings,

cant strip, sealant, soakers, etc. Weatherboard end joints are to be formed off framing with a tongue & groove joint and sealant.

Ensure that all cut edges of weatherboards are primed prior to installation with Dulux Primacryl, Resene Quick Dry, or similar. Ensure that the bottom edge of the weatherboard overhangs below the bottom plate by 50mm, and is clear of the ground surface by at least 100mm; the finished ground clearance shall be in accordance with E2/AS1. Install flexible flashing tape to all junctions and penetrations (including cables etc), with the addition of a pipe bandage for pipes to maintain weathertightness and air pressure resistance, and seal around.

Timber Trim

Install H3.1 finger-jointed pine timber trim, scribers, eaves moulds, etc to complete the weatherboard junctions as shown on the drawings. Fix with jolt-head galvanised nails punched below the surface and flushed with exterior builder's fill.

Axent Trim

Install Axent Trim as shown on the drawings. Prime cut edges as for weatherboards.

Horizontal Drainage Joints

Horizontal drainage joints to be formed on cavity batten framing with a folded metal Z-flashing. Ensure that the sheets are not fixed to the floor joists.

4.11.9 Fixings

Timber Cavity Batten Fixings

Fix timber cavity battens and other accessories with galvanised nails in accordance with James Hardie requirements.

Axent Trim

Fix Axent Trim with jolt-head galvanised nails punched below the surface and flushed with CRC Builders' Fill in accordance with James Hardie requirements.

Timber Trim

Fix timber trim with jolt-head galvanised nails punched below the surface and flushed with exterior grade builders fill.

4.11.10 Completion

Completion

Ensure that the Linea Weatherboards have been fixed correctly, that all vertical joints and accessories have been completed correctly, and that all penetrations have been taped correctly. Check that no damage has occurred to any installed weatherboard element or associated component, replace as necessary. Check that no dirt has been mounded up within 175mm of the weatherboards, and maintain the clearance. Ensure that the weatherboards are painted within 90 days of the sheet installation, complete with all accessories and flashings. Hand over a copy of the latest edition of the Linea Weatherboard Product Warranty to the client. Hand over a copy of the latest Linea Weatherboard Maintenance Schedule to the client.

4.12 James Hardie Titan Facade Panel

4.12.1 Scope

Cavity Construction with Timber Cavity Battens

Supply and install James Hardie Titan Façade Panels to Timber Cavity Battens as a fibre cement cladding material to the walls identified on the drawings, complete with all accessories. The panels are to be finished with a paint system.

All aspects of theis work shall be in complete accordance with James Hardie Titan Façade Panel Timber Cavity Batten Technical Specification (check www.jameshardie.co.nz, or call 0800 808 868 for the latest edition), BRANZ Appraisal No.467 (2005), and other relevant product manufacturers' recommendations. Use the Titan Façade Panel Installation Checklist at all relevant stages of the work.

4.12.2 Co-operation

Co-operation

Co-ordinate with other trades to ensure that appropriate clearances are allowed from roofing products and associated flashings etc, that the panels correctly allow for door and window installation, and that services penetrations are correctly handled to maintain full weathertightness and panel integrity.

Ensure that other trades are aware of the James Hardie Safe Working Practices.

4.12.3 Preparation

Preparation

Check that the timber framing elements are in accordance with NZS 3604, or in accordance with NZS 3603 and AS/NZS 1170 for specific design, and in accordance with James Hardie requirements. Framing shall be plumb and in true alignment, complete and suitable for the panels, and maximum moisture content as per NZS 3602. Ensure that the framing is true in line with no projections due to structural and bracing bracketry etc. Ensure that the bottom plate hold-downs are correctly installed.

Check that the building underlay or rigid air barrier has been installed in full accordance with the manufacturer's requirements and the drawings, and completely finished to all penetrations including doors, windows, services, etc. Check junctions to all other building elements and ensure that all necessary works have been completed eg. flashings etc that will enable the panels and all accessories to be installed.

Check that the ground levels are sloping away from the building so that there will be no ponding water against the building, and that the ground will be remain clear of the panels by at least 100mm at all times in accordance with E2/AS1.

4.12.4 Sealants

Flexible Sealant - Option 1 - SIKA Silaflex MS

Flexible silicone sealant to be SIKA Silaflex MS. Use to seal the panels and accessories in accordance with the sealant manufacturer's recommendations and to James Hardie requirements. Ensure sealant compatibility with jointing and texture finishes.

4.12.5 Workmanship

Workmanship - Timber Cavity Battens

All installation work shall be carried out by an LBP, or supervised by an LBP, in accordance with James Hardie Titan & ExoTec Façade Panel Rainscreen Technical Specification and other relevant product manufacturers' recommendations.

4.12.6 Delivery & Handling

Delivery & Handling

Carry all panels on edge. Stack panels flat on a level platform off the ground ie. use the supplied delivery pallet on level ground (if no pallet then evenly spaced bearers on level ground at 600mm crs maximum). Keep panels and accessories dry at all times. Avoid damage to panel edges, ends, and surfaces. Keep uPVC flashings etc. out of direct sunlight, and store all accessories on flat and avoid damage to any. All installers to be familiar with and comply with the James Hardie Safe Working Practices in the Technical Specification, to use appropriate safety gear, and in particular to be aware to avoid breathing silica dust. Do not use any damaged or blemished sheets or accessories.

4.12.7 Installation

Installation - Timber Cavity Battens

Fix uPVC vent strip through the rigid air barrier. Ensure that the openings in the vent strip are kept clear and unobstructed at all times. Fix timber cavity battens through the rigid air barrier to the framing. Install the panels to the timber cavity battens in accordance with the Technical Specification, complete with all accessories. Install James Hardie mould accessories to complete the installation.

Ensure that all cut edges of panels are primed prior to installation with Dulux Primacryl, Resene Quick Dry, or similar.

Ensure that the bottom edge of the panel overhangs below the bottom plate by 50mm, and is clear of the ground surface by at least 100mm; the finished ground clearance shall be in accordance with E2/AS1.

Install flexible flashing tape to all junctions and penetrations (including cables etc), with the addition of a pipe bandage for pipes to maintain weathertightness and air pressure resistance, and seal around.

All Durability Zones
Horizontal 'T' socket joints to be formed on cavity batten framing with aluminium 'T' socket flashings and adhesive-fixed to panels. Rigid air barrier shrinkage gaps to be flashed with a uPVC horizontal flashing.

Horizontal drainage joints to be formed at floor joists with a folded Z-flashing as per E2/AS1 requirements. Ensure the panels are not fixed to the floor joists. Rigid air barrier shrinkage gaps to be flashed with a uPVC horizontal flashing.

4.12.8 Batten Fixings

Timber Cavity Battens, all Durability Zones
Fix timber cavity battens and other accessories with galvanised nails in accordance with James Hardie requirements.

4.12.9 Panel Fixings

Screw Fixing, Timber Cavity Battens, all Durability Zones
Fix panels and accessories through the timber cavity battens to the framing with Grade 316 stainless steel screws in accordance with James Hardie requirements.

4.12.10 Completion

Timber Cavity Battens
Ensure that the panels have been fixed correctly, that all vertical joints and accessories have been completed correctly, and that all penetrations have been taped correctly.

Check that no damage has occurred to any installed panel element or associated component, replace as necessary.

Check that no dirt has been mounded up within 175mm of the panels, and maintain the clearance.

Ensure that the panels are painted within 90 days of the sheet installation, complete with all accessories and flashings.

Hand over a copy of the latest edition of the James Hardie Titan & Exotec Façade Panel Product Warranty to the client. Hand over a copy of the latest James Hardie Titan Façade Panel Maintenance Schedule to the client.

4.13 James Hardie Eaves & Soffits

4.13.1 Scope

Scope
Supply and install the specified James Hardie products as a fibre-cement sheet lining material to the eaves and soffits identified on the drawings, complete with all accessories. All aspects of this work shall be in complete accordance with James Hardie Eaves And Soffits Installation Manual

(check www.jameshardie.co.nz, or call 0800 808 868 for the latest edition) and other relevant product manufacturers' recommendations.

4.13.2 Eaves & Soffit Lining

4.5mm Hardiesoffit Lining

Hardiesoffit Lining. 4.5mm thick fibre-cement sheet lining with an un-sanded surface finish. The sheets are to be finished with a paint system. Installed in accordance with the James Hardie Eaves And Soffits Installation Manual to the locations shown on the drawings.

9mm Villaboard Lining

Villaboard Lining 9mm. 9mm thick fibre-cement sheet lining with a sanded surface finish. The sheets are to be finished with a paint system. Installed in accordance with the James Hardie Eaves And Soffits Installation Manual to the locations shown on the drawings.

4.13.3 Co-operation

Co-operation

Co-ordinate with other trades to ensure that the panels correctly allow for fascia and wall cladding installation and associated flashings etc., and that services penetrations are correctly handled to maintain full weathertightness and sheet integrity.

Ensure that other trades are aware of the James Hardie Safe Working Practices.

4.13.4 Preparation

Preparation

Check that the timber framing elements are in accordance with NZS 3604, or in accordance with NZS 3603 and AS/NZS 1170 for specific design, and in accordance with James Hardie requirements. The fascia and framing shall be in true alignment, complete and suitable for the sheets, and maximum moisture content as per NZS 3602. Ensure that the framing is true in line with no projections due to structural and bracing bracketry etc. Ensure that any hold-downs from the roof framing to the wall framing are correctly installed.

Check that the building underlay or rigid air barrier to the wall framing has been installed in full accordance with the manufacturer’s requirements and the drawings. Check junctions to all other building elements and ensure that all necessary works have been completed eg. flashings etc that will enable the sheets and all accessories to be installed.

4.13.5 Flexible Sealant

SIKA Silaflex MS

Flexible silicone sealant to be SIKA Silaflex MS. Use to seal the sheets and accessories in accordance with the sealant manufacturer’s recommendations and to James Hardie requirements. Ensure sealant compatibility with selected finish.

4.13.6 Adhesive Sealant

SIKA Sikaflex 11FC

Polyurethane adhesive sealant to be SIKA Sikaflex 11FC. Use to adhere the sheets to the framing in accordance with the sealant manufacturer's recommendations and to James Hardie requirements. Ensure sealant compatibility with jointing and texture finishes.

4.13.7 Workmanship

Workmanship

All installation work shall be carried out by an LBP, or supervised by an LBP, in accordance with James Hardie Eaves And Soffits Installation Manual and other relevant product manufacturers' recommendations.

4.13.8 Delivery & Handling

Delivery & Handling

Carry all sheets on edge. Stack sheets flat on a level platform off the ground ie. use the supplied delivery pallet on level ground (if no pallet then evenly spaced bearers on level ground at 600mm crs maximum). Keep sheets and accessories dry at all times. Avoid damage to sheet edges, ends, and surfaces. Keep uPVC flashings etc. out of direct sunlight, and store all accessories on flat and avoid damage. All installers to be familiar with and comply with the James Hardie Safe Working Practices in the Installation Manual, to use appropriate safety gear, and in particular to be aware to avoid breathing silica dust. Do not use any damaged or blemished sheets or accessories.

4.13.9 Installation

Installation General

Install the sheets to the framing in accordance with the Installation Manual, complete with all accessories eg. mouldings, sealant, underflashings, etc.

Ensure that all cut edges of panels are primed prior to installation with Dulux Primacryl, Resene Quick Dry, or similar. Ensure that the bottom edge of the fascia forms a drip edge of 15mm minimum to the sheet. Seal around services penetrations to maintain weathertightness and air pressure resistance.

Joints, Butt with Backing Strip - Hardiesoffit Lining

Hardiesoffit Lining joints to be formed as butt joints with backing strip.

Joints, Butt with Backing Strip - Villaboard Lining

Villaboard joints to be formed as butt joints with backing strip.

4.13.10 Fixings

Hardiesoffit Lining - Durability Zone B or C

Fix Hardiesoffit Lining sheets with galvanised nails in accordance with James Hardie requirements.

Villaboard Lining - Durability Zones D or Geothermal, Stainless Steel Screws
Fix Villaboard Lining sheets with Grade 316 stainless steel screws in accordance with James Hardie requirements.

4.13.11 Completion

Hardiesoffit Lining
Ensure that the sheets have been fixed correctly, that all joints and accessories have been completed correctly, and that all penetrations have been taped correctly. Check that no damage has occurred to any installed sheet element or associated component, replace as necessary. Ensure that the sheets are painted within 90 days of the sheet installation, complete with all accessories and flashings. Hand over a copy of the latest edition of the James Hardie Hardiesoffit Lining Product Warranty to the client. Hand over a copy of the latest James Hardie Eaves And Soffits Installation Manual to the client for their maintenance information.

4.14 James Hardie Villaboard Lining

4.14.1 Scope

9mm Villaboard Lining for Tiled Walls
Supply and install James Hardie Villaboard Lining 9mm sheets as a tiling substrate to the walls identified on the drawings, complete with all accessories. All aspects of this work shall be in complete accordance with James Hardie Villaboard Lining Installation Manual (check www.jameshardie.co.nz, or call 0800 808 868 for the latest edition) and other relevant product manufacturers' recommendations.

Villaboard Lining sheets are available in different edge profiles; refer to the drawings and specifications that describe the finishes and jointing requirements and ensure that sheets with the correct edge profile are used to satisfy these requirements. Where necessary, neatly site-form the edges to the profile required to suit the joint and reseal in accordance with the Installation Manual.

4.14.2 Elements

Fire-Rated Elements
To the areas noted as 'Fire-rated' on the drawings, additionally comply with all relevant aspects of the James Hardie Fire and Acoustic Design Manual (check on 0800 808 868 for the latest edition) and other relevant product manufacturers' recommendations.

4.14.3 Co-operation

Co-operation
Co-ordinate with other trades to ensure that appropriate clearances are allowed from adjacent internal linings, all fixture products and associated services, etc, that the sheets correctly allow for door and window installation, and that services penetrations are correctly handled to maintain full watertightness and sheet integrity. In particular, discuss the proposed sheet installation generally with the finishing trade contractors with special regard to the sheet fixings, joints, provision of all necessary accessories, and installation methodology. Agree that the installed sheets will be

completely fit for purpose and suitable for finishing and are in accordance with the Installation Manual. Bring to the attention of the designer any items that are not in accordance, or items that may be compromised by other building elements, and take instruction accordingly. Ensure that other trades are aware of the James Hardie Safe Working Practices.

4.14.4 Preparation

General Preparation

Check that the timber framing elements are in accordance with NZS 3604, or in accordance with NZS 3603 and AS/NZS 1170 for specific design, and in accordance with James Hardie requirements. Framing shall be plumb and in true alignment, complete and suitable for the sheets, and maximum moisture content as per NZS 3602. Ensure that the framing is true in line with no projections due to structural and bracing bracketry etc. Ensure that the bottom plate hold-downs are correctly installed.

Check that the building has been completely finished to all penetrations including doors, windows, services, etc so that the sheets can be installed without being affected by any weather conditions. Check junctions to all other building elements and ensure that all necessary works have been completed eg. flooring, setout of services, etc. that will enable the panels and all accessories to be installed. Clear building debris and rubbish from framing voids and keep clean until Villaboard Lining is installed.

4.14.5 Flexible Sealant

Flexible Sealant

The specified sealant shall be fully compatible with the paint/wallpaper/vinyl or specified sealer coat/waterproofing membrane and tiling system applied over.

Colour:
Manufacturer, brand name & type:

4.14.6 Workmanship

Workmanship

All installation work shall be carried out by an LBP, or supervised by an LBP, in accordance with James Hardie Villaboard Lining Installation Manual and other relevant product manufacturers' recommendations.

4.14.7 Delivery & Handling

Delivery & Handling

Carry all sheets on edge. Stack sheets flat on a level platform undercover ie. use the supplied delivery pallet. Keep sheets and accessories dry at all times. Avoid damage to sheet edges, ends, and surfaces. Keep uPVC products etc out of direct sunlight, and store all accessories on flat and avoid damage. All installers to be familiar with and comply with the James Hardie Safe Working Practices, to use appropriate safety gear, and in particular to be aware to avoid breathing silica dust. Inspect the sheets and do not use sheets with an unsuitable edge profile for the specified jointing and finishing process. Do not use damaged or blemished sheets or accessories.

4.14.8 Installation

Installation General

Install the Villaboard Lining to the framing in accordance with the Installation Manual. Install James Hardie mould accessories where applicable to complete installation.

Ensure that all site cut edges and site-recessed edges of Villaboard Lining are sealed prior to installation with Dulux Primacryl, Dulux Acraprime 501/1, Resene Quick Dry, or similar.

Seal around all fittings and penetrations in accordance with James Hardie requirements, taking care not to touch the wet sealant with bare fingers. Use masking tape for neat and accurate sealant lines, and remove whilst sealant is still wet. Clean off any excess sealant from the sheet surface.

4.14.9 Sheet Joints

Square Edge Joints w/Gap and Sealant

Form butt joints in the same plane with flexible sealant to the 1-2mm gap in accordance with the Installation Manual.

4.14.10 Internal Corner Joints

For Surfaces to be Tiled, Square Edges

Where the sheets are shown to be tiled, form reinforced internal corners with 1-2mm gap with square edges and flexible sealant in accordance with the Installation Manual. Ensure metal corner angle is installed to internal corner prior to installation of Villaboard Lining as per Installation Manual.

4.14.11 External Corner Joints

For Surfaces to be Tiled

Where the sheets are shown to be tiled, form external corners with 1-2mm gap in accordance with the Installation Manual.

4.14.12 Control Joints

For Surfaces to be Tiled

Where the sheets are shown to be tiled, form control joints ready to receive the application of the flexible sealant and backing rod by the tiler, in accordance with the Installation Manual.

4.14.13 Fixings

Wall Sheets, Tile Finish, Villaboard Screws

Where the wall sheets are shown to be tile finish, fix sheets with Villaboard screws only in accordance with James Hardie requirements.

4.14.14 Completion

Completion

Ensure that the sheets have been fixed correctly, that all joints and accessories have been completed correctly, and that all penetrations have been sealed correctly. Check that no damage has occurred to

any installed sheet element or associated component, replace as necessary. Hand over a copy of the latest edition of the James Hardie Villaboard Lining Product Warranty to the client. Hand over a copy of the latest James Hardie Villaboard Lining Installation Manual to the client for their maintenance information.

4.15 GIB® Rondo® Metal Batten Systems

4.15.1 Scope

Scope

Supply and install the selected GIB® Rondo® Metal Batten Systems to the locations identified on the drawings, complete with all accessories. All aspects of this work shall be in complete accordance with the GIB® Rondo® Metal Batten Systems 'System and Installation Manual' (check www.gib.co.nz, or call 0800 100 442 for the latest edition), other relevant product manufacturers' recommendations and as shown on the drawings.

No substitutions are permitted for GIB® Rondo® Metal Batten Systems.

Refer to separate section for ceiling and/or wall linings fixed to GIB® Rondo® Metal Battens.

4.15.2 GIB® Rondo® Metal Batten System

GIB® Rondo® 310 Ceiling Batten System

GIB® Rondo® 310 Ceiling Batten System. Incorporating 35mm deep, concealed metal ceiling battens that are either fastened with proprietary metal support clips (recommended) to the support frame or fixed directly to the support frame.

Suitable for 10mm,13mm,16mm and 19mm thick GIB® plasterboard ceiling linings for residential and commercial applications. Plasterboard ceiling linings are generally screw-fixed directly to the underside of the ceiling battens. Maximum 130mm clearance from the underside of the support frame (joist/rafter) to the top of the ceiling batten.

GIB® Rondo® 311 or 313 clips can be installed to provide additional restraint and accurate batten alignment when the battens are direct-fixed to the support frame. Use GIB Quiet Clip® for GIB® noise Control Systems.

When installed as a ceiling diaphragm, the battens must be fixed directly to the support framing. If GIB® clips are used then a timber block (min 300mm) or a continuous timber member must be fixed alongside the support framing to create a direct connection.

Install with all specified components and accessories in accordance with the manufacturer's requirements to the locations, layout, levels and details shown on the drawings.

Where electrical earthing of GIB® Rondo® 310 Ceiling Batten System is required, the electrical earthing shall be carried out (by others) by a qualified electrician in accordance with the electrical standards and regulations.

Location:

4.15.3 System Components

310 Batten - 310 Ceiling Batten System

GIB® Rondo® 310 Batten. 35mm deep, galvanised, lightweight mild steel furring channel. Installed as a component of the GIB® Rondo® 310 Ceiling Batten System.

340 Perimeter Channel - 310 Ceiling Batten System

GIB® Rondo® 340 Perimeter Channel. 35mm deep, galvanised, lightweight mild steel, perimeter 'U' channel for GIB® Rondo® 310 Battens. Fixed to wall framing with 8g x 32mm GIB® Grabber self-tapping wafer head screws, at maximum 300mm centres. Installed as a component of the GIB® Rondo® 310 Ceiling Batten System.

311 Clip (short) - 310 Ceiling Batten System

GIB® Rondo® 311 Clip. 92mm long, galvanised, lightweight mild steel fastening clip for GIB® Rondo® 310 Battens. Short length clip that provides maximum 30mm clearance from the supporting structural frame. Fixed to truss chords, joists, or rafters with 8g x 32mm GIB® Grabber® self-tapping screws or alternatively with pairs of 40 x 2.8mm GIB® Nails. Installed as a component of the GIB® Rondo® 310 Ceiling Batten System.

312 Jointer - 310 Ceiling Batten System

GIB® Rondo® 312 jointer. Galvanised, lightweight mild steel jointing clip for GIB® Rondo® 310 Battens. Used to joint the ceiling battens where spans are greater than the batten length. Installed as a component of the GIB® Rondo® 310 Ceiling Batten System.

4.15.4 Co-operation

Co-operation

Co-operate with other trades to ensure that all preliminary and preparatory works are completed to specification and as shown on the drawings.
Co-ordinate with other trades to ensure that the GIB® Rondo® Metal Batten System correctly allows for ceiling lining installation, and for the locations of recessed lights and other fittings installed by others, and to install GIB® Rondo® Metal Batten Systems as required.

4.15.5 Workmanship

Workmanship

Installation work shall be carried out by qualified and competent tradespersons, familiar with the specified products and installation techniques, in accordance with the GIB® Rondo® Metal Batten Systems System and Installation Manual, to the relevant requirements of AS/NZS 2785, and as shown on the drawings.
All cutting, jointing and fixing techniques of the system components shall be exactly as recommended by the manufacturer. All work shall be such as to leave a neat, efficient, robust and installation.

4.15.6 Deliver & Handling

Delivery & Handling

Store GIB® Rondo® Metal Batten System componentry under cover, off the floor, on a flat, level surface. Keep components dry, and protect from damage, moisture and contamination. Do not use damaged or defective componentry.

Handle components in accordance with the manufacturer's guidelines and in a manner that prevents damage to the product.

4.15.7 Preparation

General

The building must be fully enclosed, weathertight and suitably dry before installation commences. Check that all preliminary and preparatory building works have been completed to specification and as shown on the drawings.

Check that any required building services installations, including electrical, plumbing, mechanical, fire, or other service located behind the batten line, have been completed.

4.15.8 Installation

GIB® Rondo® 310 Ceiling Batten System - 450mm crs / max. 1200mm Batten Span

GIB® Rondo® 310 Ceiling Batten System. Suitable for 10mm thick, single layer, internal plasterboard ceiling linings for residential applications.

Battens spaced at 450mm centres. Maximum batten span: 1200mm for multi-span battens; maximum 900mm for single-span (non-jointed) battens and for garage ceilings.

Confirm the ceiling lining fixing and installation requirements prior to installing GIB® Rondo® 310 Metal Ceiling Battens. Make allowance for the lining thickness when establishing the finished batten datum level.

For Multi-span Battens: set-out GIB® Rondo® 310 Metal Ceiling Battens at maximum 450mm centre-to-centre spacings, with a maximum batten span of 1200mm, to the areas, levels and details shown on the drawings.

For Single-span Battens (non-jointed): set-out GIB® Rondo® 310 Metal Ceiling Battens at maximum 450mm centre-to-centre spacings, with a maximum batten span of 900mm.

As specified, screw-fix the specified perimeter angles and/or channels to the walls true to line and level.

Fix GIB® Rondo® batten clips along the batten lines, 900mm or 1200mm apart (as above), to the support framing at the required height/level.

Securely fasten the clips in place so that the battens are fixed at the correct datum level and are parallel, straight and true to line. Support batten ends on perimeter angle or channel. Alternatively; cut, fold and fix the batten end to the top plate.

Batten clip fixings and set-out shall be to the manufacturer’s installation requirements for the clip type, batten type and batten set-out.

Use full length battens. Where jointing is necessary, joint battens using the manufacturer's proprietary batten jointer for the batten type.

Do not fix batten clips directly to H3.2 CCA CuAz or ACQ treated timber, fully separate with DPC or other approved material.
Where required, provide additional battens for ceiling-mounted fixtures and fittings at the set-out shown on the drawings.

When installed as a ceiling diaphragm the battens must be fixed directly to the support framing. If GIB® clips are used then a timber block (min 300mm) or a continuous timber member must be fixed alongside the support framing to create a direct connection.

4.15.9 Completion

Completion
Carry out a final inspection immediately after installation.
Check that the GIB Rondo Metal Batten System has been installed correctly in accordance with the manufacturer's Systems & Installation Manual and as shown on the drawings, and that ceiling and/or wall installations are accurately aligned true to line, level (and/or plumb) and plane.
Check for damaged and defective work - replace or repair as necessary.

Leave completed works and surrounding surfaces clean and free of rubbish and debris. Remove all rubbish and excess material from the site.

Provide all necessary Producer Statements.

4.16 GIB® Plasterboard Sheets

4.16.1 Scope

Scope
Supply and install the selected GIB® Plasterboard sheets, complete with all accessories, as sheet lining material to the walls, ceilings and other elements identified on the drawings. All aspects of this work shall be in complete accordance with Winstone Wallboards Ltd technical literature and installation guidelines (call Winstone Helpline on 0800 100 442 or check www.gib.co.nz for the latest editions) and other relevant product manufacturers' recommendations.

Substitution of any specified GIB® system, GIB® System component or GIB® plasterboard is not permitted.

4.16.2 Components

GIB® plasterboard as a Component of a 'General' Wall or Ceiling Lining Element
To the areas noted on the drawings as 'general plasterboard wall or ceiling lining', shall additionally comply with all relevant aspects of the GIB® Site Guide January 2010 literature, complete with all recommended components and accessories and other relevant manufacturers recommendations.

GIB® plasterboard as a Component of a Wet Area Element

To the areas noted as 'Wet Area' on the drawings, additionally comply with all relevant aspects of the GIB Aqualine® Wet Area Systems March 2007, complete with all system accessories, BRANZ Appraisal No.427 (2007) and other relevant product manufacturers' recommendations.

GIB® plasterboard as a Component of a Bracing Element (Timber Framing)

To the timber framed areas noted as 'Bracing' on the drawings, shall additionally comply with all relevant aspects of the GIB EzyBrace® Systems 2011 literature and GIB Ezybrace® software 2011 to the specified bracing unit rating, complete with all system accessories, BRANZ Appraisal No.294 (2011) and other relevant product manufacturers' recommendations.

4.16.3 GIB Plasterboard

GIB® Standard, 10mm

GIB® Standard plasterboard, 10mm thick.

Location:

GIB Aqualine®, 10mm

GIB Aqualine® plasterboard, 10mm thick.

Location:

GIB Braceline® / GIB Noiseline®, 10mm

GIB Braceline® / GIB Noiseline® plasterboard, 10mm thick.

Location:

GIB Ultraline®, 10mm

GIB Ultraline®, 10mm.

Location:

4.16.4 Fixings

GIB® Grabber® Screws

Fix sheets with adhesive and GIB® Grabber® drywall screws in accordance with Winstone Wallboards Ltd requirements.

GIBFix® All-Bond Adhesive

GIBFix® All-Bond adhesive. Use to adhere the sheets and accessories to the framing in accordance with Winstone Wallboards Ltd requirements.

4.16.5 Level of Plasterboard Finish

Level of Finish

To the areas noted as a specific Level of Finish (3-5) on the drawings, additionally comply with all relevant aspects of Winstone Wallboards Ltd literature and AS/NZS 2589, complete with all system accessories, and other relevant product manufacturers' recommendations.

NOTE: Unless stated otherwise, Level 4 is the default Level of Finish.

Control Joints

To the areas noted as 'control joint', comply with all relevant aspects of Winstone Wallboards Ltd literature and AS/NZS 2589.

4.16.6 Co-operation

Co-operation

Co-operate with other trades to ensure that all preliminary and preparatory works are completed to specification and as shown on the drawings.
Co-ordinate with other trades to ensure that appropriate clearances are allowed from adjacent internal linings, fixtures, products, and associated services, etc, that the sheets correctly allow for door and window installation, and that services penetrations are correctly handled to maintain sheet integrity.

4.16.7 Workmanship

Workmanship

All installation work shall be carried out by experienced tradesmen familiar with the techniques and materials specified and in accordance with the current requirements of Winstone Wallboards Ltd.

4.16.8 Delivery & Handling

Delivery & Handling

Store GIB® plasterboard sheets undercover inside a watertight building and keep sheets dry at all times. Stack sheets flat on a dry level surface in accordance with Winstone Wallboards Ltd recommendations. Avoid damage to sheet edges, ends, and surfaces. Carry all sheets on edge.
Do not use damaged or faulty sheets.

4.16.9 Preparation

Preparation

Check that the timber framing elements are in accordance with NZS 3604, or in accordance with NZS 3603 and AS/NZS 1170 for specific design, and otherwise in accordance with the specified Level of Finish and Winstone Wallboards Ltd requirements. Framing shall be plumb and in true alignment, complete and suitable for the sheets, and maximum moisture content 18% or as recommended by Winstone Wallboards Ltd. Ensure that the framing is true to line and plane and with no projections due to structural and bracing bracketry etc. Ensure that all framing brackets, plates, braces and hold-downs etc. are correctly installed.

Check that the building has been completely finished to all penetrations including doors, windows, services, etc so that the sheets can be installed without being affected by any weather conditions. Check junctions to all other building elements and ensure that all necessary works have been completed eg. flooring, setout of services, etc. that will enable the sheets and accessories to be installed. Clear building debris and rubbish from framing voids and keep clean until GIB sheet linings are installed.

4.16.10 Installation

Installation

Install the sheets, complete with all accessories, to the framing in accordance with the relevant Winstone Wallboards Ltd recommendations and literature, and as noted and detailed on the drawings.

4.16.11 Completion

Completion

Ensure that the sheets have been cut, fitted and joined, and fixed correctly. Check for damage and replace as necessary.

Clean up thoroughly on completion and remove all waste and rubbish from site.

Provide a copy of the Winstone Wallboards Ltd maintenance requirements to the owner.

5 ROOFING

5.1 Preliminary

Refer to General Conditions of Contract and the Special Conditions in this Specification as appropriate. Read this section in conjunction with all other trade sections.

5.2 Compliance

Comply with the New Zealand Building Code 1992 including all revisions and amendments, Verification Methods where appropriate, and construction principles that are embodied in the Acceptable Solutions.

Comply with all relevant provisions and recommendations of:

1397:1993(AS/NZS)	Steel sheet and strip - hot-dipped, zinc-coated or aluminium/zinc-coated
1562.1(AS)	Design and installation of sheet roof and wall cladding - Metal
2295:2006(NZS)	Pliable, permeable building underlays
3604:2011(NZS)	Timber-framed buildings

5.3 COLORSTEEL®

5.3.1 Scope

Inland - Moderate (ISO C2)
Supply the selected Colorsteel roofing and install on the areas identified on the Roof Plan. All aspects of the work shall be in complete accordance with NZ Steel 'Installers Guide' (check 0800 100 523 for the latest edition) and any other relevant Product Manufacturers Recommendations.

5.3.2 Product

Colorsteel Endura
COLORSTEEL® Endura™.

5.3.3 Profile

Corrugated 0.40mm
Corrugated 0.40 BMT x G550.

Location:

5.3.4 Qualifications

Qualifications
All installation work shall be carried out by experienced and competent tradesmen who are familiar with the techniques and materials specified. All handling and fixing techniques, and all jointing and sealing materials and techniques, shall be exactly as recommended by New Zealand Steel.

5.3.5 Co-operation

Co-operation

Co-operate with other trades to ensure that roof framing has appropriate spacings, alignments and fixings, and is in accordance with NZS3604, and coordinate to ensure that all timber members required for ridges, hips, valleys, barges, penetrations, junctions with vertical faces, etc. are correctly in place.

Note and co-ordinate with the installer of the rainwater system specified above. Handle roofing without scratching, distortion or other damage, store on even bearers, and keep dry until installed. Ensure that each section of roof is waterproofed as soon as possible after preparatory work is complete; allow to carry out the works in several operations if necessary to comply with this condition.

5.3.6 Installation

Installation

Set-out the roofing sheets exactly square to building axis and maintain this accurate setout throughout the works, and set-out to lap sheets away from the prevailing wind.

Install the underlay running up and down the slope with minimum 300mm side laps. Do NOT install any fixings to the underlay (to avoid dissimilar metals/electrolysis) - install the underlay length by length as the roofing proceeds and ensure it is taut and evenly lapped when the roofing screws are installed.

Where not detailed by the contract documents, refer to Calder Sewart Industries Heritage Tray Installation specification.

5.3.7 Fixings

Fixing

Screw fix, screws to comply with AS3566 (Self-drilling construction screws) Class 3 or 4. (Do NOT use stainless steel screws). Use only low carbon (

Joining

Join with aluminium blind rivets in conjunction with neutral cure silicone sealant. (Do not use Monel metal, stainless steel or carbon steel rivets).

5.3.8 Flashings

Flashings

Ridges, hips, and barge flashings etc. shall all be matching Colorsteel, and as detailed. Soft zinc flashing edges very neatly dressed down where required, plumbing penetrations custom flexible rubber flashed (fully sealed), and instruct the Plumber that no copper (or brass) pipes are to discharge on to the roof.

5.3.9 Protection

Protection

Protect the coated surface from damage at all times; replace the whole sheet where a significant depth of the coating has been damaged. Completely clean off all drill and power saw swarf and pop-rivet shanks as the work proceeds (at least daily, and keep them and other rubbish out of the spoutings). Remove trade debris from the roof and from the site progressively, and on completion leave the roof and rainwater system completely clean.

Do not use black lead pencils for marking Colorsteel - permanent marking may result. Observe NZ Steel's recommendations where flues discharge above roofs, and for the installation of solar heating panels. Do NOT weld Colorsteel. NO abrasive disc cutters, no soldering, no lead head nails or lead edged flashings, no touch-up paints, and do not slide tools down the roof.

5.3.10 Maintenance

Maintenance

Advise owner to minimize walking on the roof, and to use soft-sole shoes during maintenance access. Advise owner re maintenance of unwashed surfaces, and to light detergent wash the whole roof every three to five years. Advise owner that any leaf build-up gutter protection system that traps water will invalidate the roofing warranty.

6 ALUMINIUM JOINERY

6.1 Preliminary

Refer to General Conditions of Contract and the Special Conditions in this Specification as appropriate. Read this section in conjunction with all other trade sections.

6.2 Compliance

Comply with the New Zealand Building Code 1992 including all revisions and amendments, Verification Methods where appropriate, and construction principles that are embodied in the Acceptable Solutions.

Comply with all relevant provisions and recommendations of:

1170.2:2011(AS/NZS)	Structural design actions - Wind actions
1734:1997(AS/NZS)	Aluminium and aluminium alloys - Flat sheets, coiled sheet and plate
4211:2008(NZS)	Specification for performance of windows
4223.1:2008(NZS)	Code of practice for glazing in buildings - Glass selection and glazing
4223.2:2016(NZS)	Glazing in buildings - Part 2: Insulating glass units
4223.3:2016(NZS)	Glazing in buildings - Part 3: Human impact safety requirements
4223.4:2008(NZS)	Glazing in buildings - Part 4: Wind, dead, snow, and live actions
4666:2012(AS/NZS)	Insulating glass units
4667:2000(AS/NZS)	Quality requirements for cut-to-size and processed glass
4668:2000 (AS/NZS)	Glossary of terms used in the glass and glazing industry
4680:2006(AS/NZS)	Hot-dip galvanized (zinc) coatings on fabricated ferrous articles
NZBC E2	External moisture
NZBC F4/AS1	Safety from falling
NZBC H1/AS1	Energy efficiency
WANZ	SFA 3503-03:2005 Anodising Standard
WANZ (PQAS)	Powder Coating Quality Assurance System (PQAS)
WANZ (WIS)	Window Installation System - An Alternative Solution for the installation of windows and doors

6.3 Aluminium Windows & Doors

6.3.1 Scope

Residential Series

This specification relates to the manufacture, supply, and installation by Fairview of Residential Series aluminium windows, doors and frames.

6.3.2 Requirements

Shop Drawings
Shop drawings of profiles to be used detailing installation to building details, show waterproofing.

Fix to comply with the reviewed shop drawings and installation details including flashings and bedding compounds, pointing sealants and weathering sealants.

Ensure that flashings are fully detailed, preferably as 3-dimensional diagrams, to ensure that they are fabricated and installed in a manner that will avoid the ingress of moisture.

6.3.3 Quality

Workshop Environment
These windows will be manufactured in workshops containing all mechanical equipment appropriate for the work, and by experienced and competent tradesmen who are familiar with the techniques and materials specified.

Co-ordination
The manufacturer will co-ordinate with other trades to establish the exact sizes for all frames before fabrication. Frames and sashes will be fabricated true, square, rigid, and 'out of wind', with all joints strongly mechanically fixed, and with mitres tight and fully sealed. Potential thermal, wind and seismic movements will be accommodated within the construction. All cavities will drain to the exterior, and all drilling swarf etc. will be removed during fabrication.

6.3.4 Installation Type

Cavity Construction - E2 AS1
Install to WANZ recommendations including drained cavity closers and support bars.

WANZ SUPPORT BAR
Extruded aluminium full length support bar with built in drainage and ventilation to NZBC E2, to provide continuous support to the window unit.

HEAD FLASHING
Head flashing installed onto framing line, with upturns at the ends.

6.3.5 Interior Finish

Finish - GIB Groove
GIB Groove.

6.3.6 Reveal

Timber Clears - 19mm
19mm Timber Clears reveals for paint finish with all sides primed.

6.3.7 Glass Platform

Double Glazed
Double Glazed.

6.3.8 Glass Type

Toughened
Toughened.

Annealed
Annealed.

Obscure
Obscure.

6.3.9 Glass Coat

Low E, Soft
Low E, Soft.

6.3.10 Glass Finish

Clear
Clear.

6.3.11 Corrosion Zone

Zone B
Zone B - Low risk

6.3.12 Finish

Powder Coated Aluminium, High Durability Coating
Polyester powder coating in accordance with WANZ Powder Coating Quality Assurance System and AAMA 2604-05 performance is required.

Brand: Interpon D2015
Recommended use: Prestigious residential, commercial and architectural developments, irrespective of heights
Film integrity: 15 years
Colour integrity: 15 years

6.3.13 Finish Type

Matt
Matt.

6.3.14 Colour

Black

6.3.15 Hardware

Assa Abloy - Black Colour
Hinges, stays, catches, fasteners, latches, locks and furniture as offered by the window and door manufacturer. Key alike all lockable window hardware able to be keyed alike.

Account for all keys and deliver separately to the site manager. Factory fit all required and scheduled hardware.

6.3.16 Safety Features

Safety Stays - Option 2
Factory fit safety stays to all windows scheduled for safety stays and to all windows where safety stays are required to comply with NZBC F4/AS1 4.0, Opening windows.

6.3.17 Maintenance Warranty

5 Year Maintenance Warranty
WARRANTY - MANUFACTURER/SUPPLIER
Provide a material manufacturer/supplier warranty:
5 years: For fabrication

WARRANTY - INSTALLER
Provide an installer/applicator warranty:
5 years: For installation

6.3.18 Components

Scheduled Items
Stays, hinges, running gear and glazing will be installed as scheduled (the Designer will be notified if any scheduled hardware of fixing position appears to be inappropriate for this project).

Hardware Fixed
Hardware will be fixed true to line and position, and adjusted and oiled as required for correct operation.

Glass Cut and Fit
Glass will be cut true and square, sized to provide correct edge clearances, blocked into place as required, and all units will be delivered either pressure fit, pocket glaze, or beaded/wedged, unless site glazing is required. Glazing gaskets will be compatible with all adjacent materials, and cut 1% over-length to absolutely avoid stretching during installation. Frames will be braced etc. as necessary for transportation to the site.

Flashings

Flashings as detailed will be supplied. Flashing materials will be compatible with the windows.

6.3.19 Delivery and Storage

Delivery and Storage

Arrange for delivery of windows to the site only when a suitable storage situation is available for them, handle the windows in accordance with the manufacturers requirements, avoid any frame distortion, avoid rubbing damage, avoid contact with concrete, plaster, mud etc. and keep them dry. Retain protective coverings for as long as possible, and remove them at completion.

6.3.20 Installation

Installation Quality

Experienced and competent tradesmen who are familiar with the techniques and materials specified shall carry out all installation work. Fix in accordance with the manufacturer's instructions. Take utmost care to avoid damage to anodized or powder coated surfaces - correction of any such disfigurement requires written authority - replace any badly damaged items.

6.3.21 Fixings

Compatibility

Use fixings compatible with the materials involved, as recommended by the windows manufacturer and to comply with the DWP requirements, basically aluminium or Type 316 stainless steel where exposed externally; galvanized to AS/NZS 4680, 610g/m2, may be used where not exposed.

6.3.22 Check

Check

Thoroughly check all preparatory work to openings prior to installation, including wrap, corner seal tapes, adjacent cladding, pre-installed flashings, etc. as appropriate. Use inert barriers or coatings to prevent contact between dissimilar metals or between aluminium and concrete.

6.3.23 Flashing

Flashing and Weather-sealing

Install flashings as detailed and supplied by the windows manufacturer, installed tightly and neatly with absolute minimum tolerances, with head weathering jamb, jamb weathering sill, and sill open (draining) to exterior. Except where the window is recessed all head flashings shall extend 30mm minimum beyond the frame.

Air-seal all frame perimeters to adjacent structure to a depth of 15 - 20mm with expanding foam or appropriate sealant including a PEF rod at head, sill and jambs to retard the spread of sealant.

Weather-seal frame jambs etc. to adjacent surfaces (or to each other) as detailed or as required by the windows manufacturer, to achieve a fully watertight installation. In preparation for sealant the joints shall be clean, dry, and primed if necessary. Insert closed cell polyethylene backer rods or a

polyethylene tape slip layer if required. Mask adjacent surfaces if appropriate, install the sealant fully in accordance with the sealant manufacturers recommendations, and finish to even smooth surfaces.

6.3.24 Completion

Completion

Remove trade debris progressively, appropriately clean any affected adjacent surfaces, thoroughly clean the windows, check that all hardware is in full working order, and provide safety indication of the glass for the balance of adjacent works.

7 INSULATION

7.1 Preliminary

Refer to General Conditions of Contract and the Special Conditions in this Specification as appropriate. Read this section in conjunction with all other trade sections.

7.2 Compliance

Comply with the New Zealand Building Code 1992 including all revisions and amendments, Verification Methods where appropriate, and construction principles that are embodied in the Acceptable Solutions.

Comply with all relevant provisions and recommendations of:

3604:2011(NZS)	Timber-framed buildings
4220:1982(NZS)	Code of practice for energy conservation in non-residential buildings
4243.1:2007(NZS)	Energy efficiency - Large buildings - Building thermal envelope
4246:2006(NZS)	Energy efficiency - Installing insulation in residential buildings
4859.1:2002(AS/NZS)	Materials for the thermal insulation of buildings - General criteria and technical provisions

7.3 Thermal Insulation

7.3.1 Scope

Scope

Supply and install the selected products as thermal insulation to the specified R-values, complete with all accessories, to the floors, walls, ceilings, roofs, and other thermally insulated building elements, as noted and shown on the drawings. All aspects of this work shall be in accordance with the product manufacturer's technical literature and installation requirements, other relevant product manufacturers' recommendations, and as shown on the drawings.

7.3.2 Co-operation

Co-operation

Co-operate with other trades to ensure that all preliminary and preparatory works are completed to specification and as shown on the drawings.
Co-ordinate with other trades to install all thermal insulation as required.

7.3.3 Workmanship

Workmanship

All installation work shall be carried out by experienced and competent tradesmen, familiar with the specified products and installation techniques, in accordance with the manufacturer's installation requirements, and as noted and detailed on the drawings.
Store and handle products in accordance with the manufacturer's recommendations, keep dry and

protect from damage. Do not compress fibre insulation bales. Do not use damaged or defective insulation products and accessories.
The building must be completely enclosed and water tight before installation commences with the exception of roof insulation when installed with roofing. Ensure the moisture content of timber framing is no greater than 18% prior to installing insulation to timber framed elements. Always maintain the full insulation thickness to ensure the required thermal values are achieved. Do not install insulation pads or blankets into closed cavities that are less than the stated insulation nominal thickness.

7.3.4 Product

Glass Fibre Pads
Glass fibre thermal insulating pads.

Manufacturer, brand name & type: Pink Batts Ultra
Thickness & R-Value: R3.2 (90mm Nominal loft)
Location: All external walls

Glass Fibre Blanket
Glass fibre thermal insulating blanket.

Manufacturer, brand name & type: Pink Batts Ultra
Thickness & R-Value: R5.0 (190mm Nominal Loft)
Location: All Roof/ceiling cavities.

7.3.5 Installation

Wall Insulation - Glass Fibre Pads
Install glass fibre insulation pads, complete with accessories, friction fitted between wall studs and dwangs etc. and held in place in accordance with the manufacturer's installation recommendations. Completely fill the framing voids, leave no gaps at the edges or at penetrations etc, and maintain full insulation pad thickness. Support external wall insulation with vertical strapping tape at 400mm centres to the outside face, stainless steel stapled to the framing.

Ceiling Insulation, Truss/Framed Roof - Glass Fibre Pad
Install glass fibre insulation pads, complete with accessories, friction fitted between the ceiling joists, over the ceiling lining in accordance with the manufacturer's installation recommendations. Leave no gaps along the insulation pad edges and joints, and at the ceiling perimeter/wall junction. Separate ceiling insulation 200mm from recessed light fittings and other recessed electrical fittings; refer to the drawings for containment requirements around recessed electrical fittings.

Ceiling Insulation, Framed/Truss Roof - Glass Fibre Blanket
Install glass fibre insulation blanket, complete with accessories, over the ceiling lining, at right angles to the joists, and allow to drape into the joist cavity in accordance with the manufacturer's installation recommendations. Leave no gaps along the insulation blanket edges and joints, and at the ceiling perimeter/wall junction. Separate ceiling insulation 200mm from recessed light fittings and other

recessed electrical fittings; refer to the drawings for containment requirements around recessed electrical fittings.

7.3.6 Completion

Completion

Check that all insulation has been installed correctly and is correctly supported and that all edges, joins and ends are fully closed without gaps. Check for damage and faults and repair or replace as necessary. Collect and remove from site all rubbish and waste material.

Issue to the Owner a copy of any product maintenance requirements and a copy of the Thermal Insulation Product and Installation Warranties for the completed works.

8 TILING

8.1 Preliminary

Refer to General Conditions of Contract and the Special Conditions in this Specification as appropriate. Read this section in conjunction with all other trade sections.

8.2 Compliance

Comply with the New Zealand Building Code 1992 including all revisions and amendments, Verification Methods where appropriate, and construction principles that are embodied in the Acceptable Solutions.

Comply with all relevant provisions and recommendations of:

3103:1991(NZS)	Specification for sands for mortars and plasters
3122:2009(NZS)	Specification for Portland and blended cements (General and special purpose)
4858:2004(AS/NZS)	Wet area membranes

8.3 Workmanship

8.3.1 Co-operation

Co-operation

Co-operate with the Contractor and other Subcontractors to ensure that substrates are completely appropriate for the tiling required, particularly with regard to concrete surface finish, the use of retarders, release agents or curing compounds, and with regard fixing and finishing of sheet substrates and their support.

8.3.2 Workmanship

Sequence

Delay tiling to allow maximum curing and settling and initial creep of the substrates, particularly to load bearing structural elements.

Qualifications

All work by competent and experienced tilers. Co-ordinate with other trades and instruct them as necessary to ensure appropriate substrate conditions to assure first class tiling results.

Preparation

Protect all adjacent surfaces from damage or staining during tiling: arrange any making good or cleaning required as instructed by the Architect/Designer. Wash down and remove form work release agents, slab curing compounds, and surface retarders. Clean down with mould killer, etching agents, or wire brush as required. Grind off high spots if required. Ensure that the moisture content of substrates is appropriate.

Set-out

Set out tiles as detailed or for even margins with patterns to register in all directions. The finished surfaces shall be true and even and with lines accurate, level and plumb, or to even falls as noted, and finished flush with adjoining work as appropriate. Cut edges to the manufacturers instructions, and stone arris where the cut edges are not concealed under adjoining work.

Installation

No retempering of partially set or dried mortar, adhesive or grout. Prior to grouting rake out any excess bedding material. Grout shall be coloured as directed, placed full depth, and finish tooled to a dense, uniform surface. Clean excess grout off tiles and adjacent surfaces.

Control Joints

Form control joints at tiling edges abutting concrete or masonry, within the tiled surface to give a maximum panel dimension of 2m, and over any control joints in the substrate. Rake control joints full depth to the substrate as work proceeds, mask edges and clean out just prior to placing filler, and fill full depth and flush. Clean excess filler off the tiles or other surfaces.

Completion

On completion thoroughly clean the full tiled surfaces, and lightly buff where appropriate. Protect finished work from subsequent damage.

8.4 Materials

8.4.1 Materials

Adhesives & Grouts

All adhesives/beddings/grouts shall be selected for each specific tile/substrate situation, selected as the best readily available, and each is subject to approval by the Architect/Designer (who may require appropriate manufacturers information for consideration prior to approval).

Standards

Water, cement, sand and sand particle size grading, all exactly to the relevant NZS requirements.

Crack Control

Crack control joint filler as recommended by the tiles supplier, with the colours selected from the standard range.

Materials shall be from the same batch for even type and colour, and shall be delivered with their packaging and labeling intact.

Requirements

Store in dry areas, machine mix all materials to the manufacturers requirements, and do not mix proprietary materials.

8.4.2 Tiles/Scope

Delivery & Handling

All tiles true to shape, free of warp, and accurate in dimensions to facilitate laying with minimum joint width. All tiles true to samples and free of imperfections. Tiles from the same batch where possible, and delivered with the original packaging and labeling intact. Tiles handled and stored carefully to preserve edges.

Setout

The exact setout will be notified with the tile(s) selection.

9 PAINTING & DECORATING

9.1 Preliminary

Refer to General Conditions of Contract and the Special Conditions in this Specification as appropriate. Read this section in conjunction with all other trade sections.

9.2 Compliance

Comply with the New Zealand Building Code 1992 including all revisions and amendments, Verification Methods where appropriate, and construction principles that are embodied in the Acceptable Solutions.

Comply with all relevant provisions and recommendations of:

2310:2002(AS/NZS)	Glossary of paint and painting terms
2311:2009(AS/NZS)	Guide to the painting of buildings
3750.0:2008(AS/NZS)	Paints for steel structures - Introduction and list of Standards
BRANZ IB 257	Wood primers

9.3 General

9.3.1 Alternatives

Alternatives - Option 1

The materials specified in this section or on the drawings indicate the required standards for these works. Alternatives which are considered equal to or superior to these may be tendered for approval (in writing, and they must NOT be used unless they are approved in writing).

9.3.2 Co-operation

Co-operation

Co-operate with all trades and attend upon Concretor, Joiner, Carpenter, etc. to ensure that the surfaces provided by these trades are completely suitable for the Painter works that are required.

9.3.3 Preparation

Preparation

No painting or varnishing or other surface coating work shall be undertaken unless the surfaces to be coated are in a correct and proper condition to ensure first class results.

Inspect the works of other trades on which Painter work is scheduled and report to the Main Contractor and the Architect/Designer any defects or irregularities that would affect the permanency or finish of the painting work, and do not proceed until the defects or irregularities have been completely rectified. Failure to examine and report will be construed as an acceptance that all preparatory works are completely satisfactory.

This clause does not relieve the Painter of any of the usual preparatory work to surfaces customarily performed by this trade.

Clean down all surfaces with sugar soap, strippers, mould killers, etching agents, etc. as required. Sand or rub all sharp edges off exterior timbers and other materials as appropriate before painting. Finish rub down ALL surfaces. Ensure that the moisture content of all substrates is appropriate. Remove locks, fastenings, and similar hardware before painting and refix on completion. Remove all electrical switch and power plates before painting and refix them on completion. Mask adjacent surfaces as required to a true line and remove the masking on completion. Dust and wipe down all surfaces for Painter work and completely remove all dust, rubbish, dirt etc. from areas involved immediately prior to commencement. To each area of the works complete all surface preparation before applying paint to any surface.

9.3.4 Protection

Protection

Take adequate precautions to prevent paint spots falling on prefinished or similar surfaces, and extreme care to keep absorbent materials (e.g. cedar, sawn framing, decking, paving) completely clean during all adjacent painting work. Correction of any such disfigurement shall be to the Architect/Designer's approval.

9.3.5 Qualifications

Qualifications - Option 1

The Painting Subcontractor must be a member of the Master Painters Association. All work shall be of the highest reasonable standard, and executed by experienced and competent tradesmen to the Architect/Designer's approval.

9.3.6 Workmanship

Workmanship

Strictly adhere to all Manufacturers' instructions.

Strictly observe Manufacturers' requirements with regard to surface and air temperatures for painting. No work shall be carried out on surfaces that are not completely dry, and no external work shall be carried out during damp or wet conditions.

In all finishes any irregularities or brushmarks or dust etc. in each preceding coat shall be rubbed down to provide a smooth clean surface for the following coat. Each coat shall be finished over all surfaces before a further coat is applied, and each coat shall be completely dry before subsequent coats. Finish broad areas before painting trim, paint ceilings before walls and walls before joinery, trim and other items.

Each coat and the full completed system shall be of uniform finish, colour, texture and sheen, shall have proper covering of thin edges, corners, end grain etc. and shall be free of blemishes such as runs, sags, fat edges, entrained hairs, brush marks, starved patches etc.

9.3.7 Wallpapers & Lining Papers

Wallpapers & Lining Papers

Wallpapers and lining papers, where scheduled, shall be hung plumb, true and square, and with precise butts. Patterns shall be accurately matched at each join. All rolls used in any one area shall be from the same batch. Use a fungicide incorporated adhesive that is recommended by the supplier. Edges neatly and precisely cut to the adjacent element. Finish free of air bubbles, wrinkles, gaps or stains.

9.3.8 General

General

The schedules indicate the general extent of the works to be carried out but are in no way exhaustive in their description of the actual items for painter work. Complete all work necessary for the proper and entire completion of the works. All items and portions of items reasonably inferable but not specifically mentioned are deemed included, i.e. cupboard interiors, the top and bottom of doors, unseen cabinetry tops, etc. All doors shall have equal painter work on ALL surfaces.

Where timber work is specified for priming before fixing the priming shall be thoroughly brushed in to all surfaces, and all exterior timber work for paint finishing shall be fully primed within one week of fixing. Should more than one month elapse between priming and undercoating the timber shall be fully reprimed.

Stopping up work shall be carried out immediately the priming or sealing coat is dry, and shall be solidly placed to finish clean and dry. Stopping tinted to match the timber for clear finished work.

Paint putties within one month of glazing timber frames; paint to impinge on glass to assist sealing.

9.3.9 Materials

Materials

All Painter materials shall be ready mixed and delivered in unopened containers. Materials shall be used only for the purpose and in the manner intended by the manufacturer; any apparent scheduled discrepancy in this respect shall be referred to the Architect/Designer immediately for clarification.

Where surfaces are specified to be finished in a particular manner or material, all preparatory work, priming, or undercoating, that is necessary to ensure a proper finish shall be provided, irrespective of any apparent omission herein.

Thinning shall only be to manufacturer's specification. Thoroughly stir as required to lift any settled pigment and ensure the paint is homogeneous. Paints shall be factory or shop tinted to the colour required. Undercoats shall be fully tinted to match the final colour scheduled. All paints shall have the finished film thickness that is specified by the manufacturer (checked by monitoring the coverage per litre).

9.3.10 Completion

Completion

Allow to touch up to approval any Painter work which is damaged during the finishing works of other trades. Replace all hardware, remove all masking, covers, containers etc., thoroughly clean all affected surfaces, and leave all spaces ready for immediate occupation. Avoid scratching or abrading glass or hardware during any cleaning.

10 PLUMBING

10.1 Preliminary

Refer to General Conditions of Contract and the Special Conditions in this Specification as appropriate. Read this section in conjunction with all other trade sections.

10.2 Compliance

Comply with the New Zealand Building Code 1992 including all revisions and amendments, Verification Methods where appropriate, and construction principles that are embodied in the Acceptable Solutions.

Comply with all relevant provisions and recommendations of:

1221:1997(AS/NZS)	Fire hose reels
1254:2010(AS/NZS)	PVC-U pipes and fittings for stormwater and surface water applications
1260:2009(AS/NZS)	PVC-U pipes and fittings for drain, waste and vent application
1477:2006(AS/NZS)	PVC pipes and fittings for pressure applications
1546.1:2008(AS/NZS)	On-site domestic wastewater treatment units - Septic tanks
1596:2014(AS/NZS)	The storage and handling of LP Gas
2032:2006(AS/NZS)	Installation of PVC pipe systems
2033:2008(AS/NZS)	Installation of polyethylene pipe systems
2492:2007(AS/NZS)	Cross-linked polyethylene (PE-X) pipes for pressure applications
2537.1:2011(AS/NZS)	Mechanical jointing fittings for use with crosslinked polyethylene (PE-X) for pressure applications - Part 1: Plastics piping systems for hot and cold water installations - Crosslinked polyethylene (PE-X) - General
2642.2:2008(AS/NZS)	Polybutylene pipe systems - Polybutylene (PB) pipe for hot and cold water applications
2712:2007(AS/NZS)	Solar and heat pump water heaters - Design and construction
3500.1:2015(AS/NZS)	Plumbing and drainage - Part 1: Water services
3500.2:2015(AS/NZS)	Plumbing and drainage - Part 2: Sanitary plumbing and drainage
3500.3:2015(AS/NZS)	Plumbing and drainage - Part 3: Stormwater drainage
3500.4:2003(AS/NZS)	Plumbing and drainage - Part 4: Heated water services
3500.5:2012(AS/NZS)	Plumbing and drainage - Part 5: Housing installations
3501:1976(NZS)	Specification for copper tubes for water, gas, and sanitation
4121:2001(NZS)	Design for access and mobility: Buildings and associated facilities
4517:2010(NZS)	Fire sprinkler systems for houses
4602:1988(NZS)	Low pressure copper thermal storage electric water heaters
4603:1985(NZS)	Installation of low pressure thermal storage electric water heaters with copper cylinders (open-vented systems)
4606.1:1989(NZS)	Storage water heaters - General requirements

4607:1989(NZS)	Installation of thermal storage electric water heaters: valve-vented systems
4613:1986(NZS)	Domestic solar water heaters
4614:1986(NZS)	Installation of domestic solar water heating systems
4617:1989(NZS)	Tempering (3-port mixing) valves
4692.1:2005(AS/NZS)	Electric water heaters - Energy consumption, performance and general requirements
4766:2006(AS/NZS)	Polyethylene storage tanks for water and chemicals
5601.1:2013(AS|NZS)	Gas installations - Part 1: General installations
7602:1977(NZS)	Specification for polyethylene pipe (Type 5) for cold water services
7643:1979(NZS)	Code of practice for the installation of unplasticized PVC pipe systems
7646:1978(NZS)	Specification for polyethylene pipes and fittings for gas reticulation
NZBC G11	Gas as an Energy Source
NZBC G12	Water Supplies
NZBC G13	Foul Water

10.3 General

Carry out all works necessary to leave the water, waste, vent and soil systems serving the sanitary fittings and the plumbing hardware shown on the drawings or specified below in correct working order complete with all ancillary systems (safetrays, floor drains, overflows, relief valves, etc.) required, and with all normal incidentals customarily installed by this trade.

Comply with the Building Code, Territorial Authority By-laws and statutory authority Regulations as appropriate. Obtain all necessary permits and consents, serve all necessary notices, arrange for all tests and pay all fees and customary charges in connection with the required works.

10.4 Workmanship

10.4.1 Co-operation

Co-operation

Co-operate with all other trades. Attend upon Concretor, Drainlayer and Carpenter to set out the exact positions of pipe runs before adjacent work is put in hand, and to ensure that all pipes, sleeves, fixings, flashings etc. are correctly incorporated into the structure as construction proceeds.

10.4.2 Workmanship

Qualifications

All plumbing work shall be carried out by, or under the direct control of, properly qualified tradesmen, and shall be to recognised high standards.

Winter Conditions

Observe best local trade practice to avoid problems which arise from freezing winter conditions.

Cutting & Checking Timber

The cutting away and checking of timbers shall be limited to such dimensions as will not prejudice the purpose for which the timber is used; observe NZS 3604 restrictions on the holing and checking of joists and beams. Chasing and checking of other materials only to approval. Install seismic restraints to storage tanks and HWCs.

Weatherseal

Weatherseal wherever pipes, screws, bolts or other fastenings penetrate an external surface, and particularly roofing; seal with gaskets, flashings (and overflashings if necessary) or mastic as appropriate - any damage that results from failure of such seals will be made good at the Plumber's expense.

Protection

Adequately protect all surfaces. Any damage to fittings or surfaces made good by the appropriate trade at the Plumber's expense.

10.4.3 Pipework

Joints

Joints between pipes of different materials shall always be to the approval of the TA Plumbing Inspector.

Pipework Set-out

Pipework set-out neatly with a minimum number of bends, and more or less parallel to and at right angles to structural elements - avoid diagonal piping.

Concealed & Exposed Pipework

All internal pipework shall be concealed except where otherwise is either shown or approved. Exposed pipework shall be accurately and neatly run. Arrange all pipework (and particularly traps) in a manner which will allow maximum future accessibility for repairs or maintenance. Arrange for access panels to any primary maintenance positions, and install conveniently located isolating valves for each group of fittings. Wingbacks securely and squarely fixed. Crox unions usually acceptable only at the final connection to fittings. Install white plastic flanges where pipes penetrate linings in visible locations.

Marked Positions

Where pipes are covered with nail fixed linings and trim ensure that their positions are marked on the linings to minimise the risk of subsequent nailings penetrating the pipe. Any such damage shall be rectified immediately, with all consequential damage made good.

Fixing Pipework

Set pipework out in straight runs to even gradients. Fix all pipes to the structure sufficiently to fully support and to prevent sagging or vibration. Clips and saddles shall be the same material as the pipe. Exterior pipes on stand-off brackets. Fixings to the exterior or damp locations shall all be hot dip galvanized unless otherwise noted. Sleeves for pipes or drains penetrating concrete or masonry shall

be uPVC, 20mm minimum larger internal diameter than the external diameter of the pipe, finished flush with concrete or masonry, and packed and mastic sealed.

During Construction
Close open ends of the systems during construction to prevent the entry of foreign matter.

10.4.4 Temperature Movement

Thermal Issues
All work shall respect in full all probable thermal movements - layouts, fixings and jointings shall be arranged to allow thermal movement without risk of prejudice to watertight conditions, or risk of damage from straining of the pipes which will generate failures.
In particular, observe best local trade practice to avoid problems arising from freezing conditions.

10.4.5 Excavation

Excavation Requirements
Allow to carry out all excavation that is required to suit the services installed by this trade. Check for other services before excavation. Trenches true to line and level, base of trenches clear of loose material, and shore trenches as required to suit the ground conditions. Backfilling shall be carried out by this trade, and be to the requirements specified in Siteworks.

10.4.6 Testing

Services Testing
All plumbing services shall be completed in stages which will allow for proper testing under normal working pressures prior to the application of insulation, concealment or other enclosure. Testing of piped water services shall be by hydrostatic testing in accordance with AS/NZS 3500.1 and shall not show any leakage when subjected to a hydrostatic pressure of 1500kPa for a period of not less than 30 minutes. All leaks remedied and retested. On completion the whole of the plumbing services to be subjected to full operational tests in the presence of the plumbing inspector, with any defects revealed in these tests properly remedied.

10.4.7 Warranties

Warranties Submittal
Warranty cards and manufacturer's guarantees for all items supplied and installed by this trade shall be correctly filled in and handed over at Practical Completion.

10.5 Materials

10.5.1 Materials

Materials Quality
Materials shall be delivered with packaging and labeling intact. Incidentals (jointing compounds, PTFE tape, seals, washers, silfos, solvent cements, etc.) shall be completely appropriate for the application involved. The use of imperfect items or items damaged in any way is always subject to approval.

10.5.2 Alternatives

Tendering Alternatives

The materials and elements specified indicate the required standards for these works. Alternatives which are equal to or superior to these materials and elements may be tendered for approval.

10.5.3 Materials Separation

Materials Separation

Separate dissimilar metals in any circumstances which could produce contact or electrolytic action by a water film, with thick plastic tape, bituminous felt or other inert material. Pipes in contact with or built into concrete or masonry shall be fully spiral wrapped in Denso tape or equal.

10.6 Systems

10.6.1 Wastes & Vents

Sizes & Falls

All traps sized to AS 3500.2. Wastes and vents all uPVC. Wastes shall be to AS 3500.2 falls as a minimum. Vents shall be generally as indicated, but avoid where permissible in compliance with AS 3500.2, or shall be combined above the flood level of the fittings.

Bird-proof Domes

Fit bird proof domes to all vents.

10.6.2 Cold Water System

Supply From New Connection to Reticulated Supply

All cold water supply pipework shall be polybutylene, arranged and fixed so that all joints are in a fully ‘relaxed' condition, without any stress or tension.

Make complete arrangements for the installation of a new connection to the reticulated supply in the street and the main feed and toby in the position shown. Lay on a 20mm main from the toby along the route shown on the Site Plan to the connection position noted on the Floor Plan (pipe depth, protection, backfilling, signal strip etc. to comply with all Supply Authority requirements). At the connection position take a branch feed off for the hosecocks (and reticulate to the positions shown and install angle hosecocks) and toilet cisterns and then take the main feed through an accessibly positioned cleanable in-line sediment and dirt filter.

Primary distribution from the water filter shall be in 20mm piping, reducing to 12mm for the final feed to individual items. Install conveniently located isolating valves to turn off each group of fittings, and install a small isolating valve alongside each toilet cistern not integrally fitted with one. (Note that these isolating valves and the hosecocks are not covered by the Plumbing Hardware Prime Cost Sum).

10.6.3 Hot Water System

Electric Storage, High Pressure Hot Water Cylinder

Supply the electric storage high pressure hot water cylinder noted on the drawings and install it where shown. Where appropriate install the cylinder on a safetray, with its drain discharging in a

visible location.
Install temperature and pressure relief valves, cold water expansion valves, flow control valves, line strainers, pressure limit valves, and non-return/isolating valves as required to leave the hot water system in full design operational order. Install a tempering valve for each cylinder to control the hot water temperature at any sanitary fixture used for personal hygiene at not more than 55°C.
Check that the water pressure is suitable for the cylinders operation, and install PRV's if excessive.
Pressure relief discharges shall be copper and to the exterior in approved positions.
Flush all pipework before making the final connections. Lag the main distribution pipes full length with wall pipe insulation.
Showers shall have priority feeds, without 'tees', and the pipework layout shall ensure that the showers temperature and pressure remain as even as possible.
Irrespective of whether a mixing device is installed, the storage water heater control thermostat shall be set at a temperature of not less than 60°C to prevent the growth of Legionella bacteria.

11 DRAINLAYING

11.1 Preliminary

Refer to General Conditions of Contract and the Special Conditions in this Specification as appropriate. Read this section in conjunction with all other trade sections.

11.2 Compliance

Comply with the New Zealand Building Code 1992 including all revisions and amendments, Verification Methods where appropriate, and construction principles that are embodied in the Acceptable Solutions.

Comply with all relevant provisions and recommendations of:

1254:2010(AS/NZS)	PVC-U pipes and fittings for stormwater and surface water applications
1260:2009(AS/NZS)	PVC-U pipes and fittings for drain, waste and vent application
1546.1:2008(AS/NZS)	On-site domestic wastewater treatment units - Septic tanks
2032:2006(AS/NZS)	Installation of PVC pipe systems
3500.2:2015(AS/NZS)	Plumbing and drainage - Part 2: Sanitary plumbing and drainage
3500.3:2015(AS/NZS)	Plumbing and drainage - Part 3: Stormwater drainage
7643:1979(NZS)	Code of practice for the installation of unplasticized PVC pipe systems
AS/NZS 1547:2012	On-site domestic wastewater management
BS 5572	Code of practice for sanitary pipework
NZBC G13	Foul Water

11.3 General

Carry out all required works to leave the sewer and stormwater systems shown on the drawings in correct working order complete with all normal incidentals.

Comply with Local Authority By-laws and Health Department Regulations as appropriate. Obtain all necessary permits and consents, serve all necessary notices, arrange all tests and pay all fees and customary charges in connection with the works.

11.4 Workmanship

11.4.1 General

General

Carry out all required works to leave the sewer and stormwater systems shown on the drawings in correct working order complete with all normal incidentals. Comply with Local Authority By-laws and Health Department Regulations as appropriate. Obtain all necessary permits and consents, serve all necessary notices, arrange all tests and pay all fees and customary charges in connection with the works.

11.4.2 Co-operation

Co-operation

Cooperate with all trades and attend upon the Concretor and Plumber to set out exact pipe runs before any adjacent work is put in hand and ensure that all sleeves etc. are correctly incorporated as work proceeds.

11.4.3 Materials

Materials

All pipes and other materials shall comply with the appropriate Standards, and shall be protected from damage of any kind until installation is complete. All incidentals appropriate for the applications involved. Concrete shall be 17.5MPa and as specified under Concretor, Mortar shall be as specified in Blocklayer.

11.4.4 Workmanship

Workmanship

All drainlaying shall be carried out by, or under direct control of, properly qualified tradesmen, and shall be to recognised high standards. Ensure cast-in items are installed when required so that no delay is caused by this trade. Adequately protect all adjacent surfaces - clean down to remove dirt etc., and any damage shall be made good by the appropriate trade at the Drainlayer's expense.

On completion of drainlaying clean up full area affected by this trade to the condition it was in before drainlaying commenced.

Site is to be returned as close as possible to its present condition on completion of the contract.

11.4.5 Excavation

Excavation

As required for sewer and stormwater. Check for other service lines before excavation - the Drainlayer is responsible for making good any damage. Trenches true to line and with even gradients between gullies, soil stack terminations or downpipes, etc.

Keep the bottom of trenches clear of loose material. All pipes shall be laid in appropriate bedding material, compacted as required. Shore trenches if required to suit ground conditions. Backfilling shall be by this trade, to the standards required in Siteworks.

11.5 Elements

11.5.1 Drainlaying

Drainlaying

Commence drainlaying at the low end of even fall sections of drains and proceed in a continuous sequence to the fittings connections.

Sumps, gullies, etc. solidly bedded. Lay 110mm uPVC drains to connect gullies, sumps, stacks, and downpipes through to the street edge connections.

Every junction and bend shall be an inspection position. Temporarily seal the open ends of incomplete drains to prevent entry of foreign matter. Make appropriate provision for any anticipated differential settlement. Place signal strip above all drains.

Ensure that stormwater drains are very accurately positioned so that downpipes can drop directly into them, without offsets.

11.5.2 Testing

Testing

The sewer and stormwater systems shall both be fully tested to the approval of the Territorial Authority Inspector before being covered in. If any defects show rectify and then fully retest.

11.5.3 As Built Drawings

As Built Drawings

During drainlaying plot the location of all bends and changes in direction and all cleaning access positions. Locate each item by two diagonal measures from structure corners, etc. and record on a blank plan copy (supplied by Architect/Designer when requested).

Note that Practical Completion of the contract will not be certified until this as-built drawing has been produced (made available to the Contractor in time for the Code Compliance Certificate application.

12 ELECTRICAL

12.1 Preliminary

Refer to General Conditions of Contract and the Special Conditions in this Specification as appropriate. Read this section in conjunction with all other trade sections.

12.2 Compliance

Comply with the New Zealand Building Code 1992 including all revisions and amendments, Verification Methods where appropriate, and construction principles that are embodied in the Acceptable Solutions.

Comply with all relevant provisions and recommendations of:

2201.1:2007(AS/NZS)	Intruder alarm systems - Client's premises - Design, installation, commissioning and maintenance
2293.2:1995(AS/NZS)	Emergency evacuation lighting for buildings - Inspection and maintenance
3000:2007(AS/NZS)	Electrical installations (known as the Australia/New Zealand Wiring Rules)
3012:2010(AS/NZS)	Electrical installations - Construction and demolition sites
3100:2009(AS/NZS)	Approval and test specification - General requirements for electrical equipment
3112:2011(AS/NZS)	Approval and test specification - Plugs and socket-outlets
4512:2010(NZS)	Fire detection and alarm systems in buildings
4514:2009(NZS)	Interconnected smoke alarms for houses
5000.1:2005(AS/NZS)	Electric cables - Polymeric insulated - For working voltages up to and including 0.6/1 (1.2) kV
60335.2.30:2009(AS/NZS)	Household and similar electrical appliances - Safety - Particular requirements for room heaters
60335.2.35:2004(AS/NZS)	Household and similar electrical appliances - Safety - Particular requirements for instantaneous water heaters
60598.2.2:2001(AS/NZS)	Luminaires - Particular requirements - Recessed luminaires
60598.2.22:2005(AS/NZS)	Luminaires - Particular requirements - Luminaires for emergency lighting
6104:1981(NZS)	Specification for emergency electricity supply in buildings
AS/NZS 2053	Specification for unplasticized PVC conduit and fittings for electrical wiring
AS/NZS 3085	Telecommunications installations
AS/NZS 3191	PVC insulated flexible cords
AS/NZS 3439	Electrical switchgear and controlgear
AS/NZS 60227	Polyvinyl chloride insulated cables of rated voltages up to and including 450/750 V - Flexible cables (cords)
AS/NZS 60898	Electrical accessories - Circuit-breakers for overcurrent protection for household and similar installations - Circuit-breakers for a.c. and d.c. operation

AS/NZS 61009	Residual current operated circuitbreakers with integral overcurrent protection for household and similar uses (RCBOs)
NZECP 54	Recessed luminaires

12.3 Workmanship

12.3.1 General

Scope

Supply and install all materials, including all necessary minor and incidental items, for proper completion of all of the electrical services specified or shown on the drawings. The contract will not be deemed to be complete until the Electrician has provided an Electrical Certificate of Compliance in accordance with NZECP 11 (made available to the Contractor in time for the Code Compliance Certificate application).

Required Tasks

Obtain all necessary permits and consents, serve all notices and pay all fees in and customary charges connection with the works.

Position of Items (Edit)

The position of switches, light and power outlets and other fittings, although shown specifically in some instances, are in general only shown diagrammatically. The exact location of each of these items will be as directed on site by the Architect/Designer; the Electrician shall give reasonable notice of when this information is required. Items positioned in contravention of this shall be repositioned if directed, including rewiring if necessary, all at the Electrician's expense.

Unless drawn (on 1:20 wall elevations) or specified otherwise the mounting height to the centreline of the following items above the floor shall be:

-1000mm for lighting switches;
-2000mm for wall mounted lights;
-2100mm for the bayonet of pendant lights;
-300mm for power points, except at benches.

(Notify the Architect/Designer if either the actual fitting or mounting position seem to make the mounting height noted above inappropriate).

Warranties Submittal

Warranty cards and manufacturers guarantees for items supplied and installed by this trade shall be filled in correctly and handed over at Practical Completion. Arrange all circuits to obtain an optimum balance of the system, and check and reconnect where necessary to achieve this on completion. Leave the works clean and tidy and in full operational order.

12.3.2 Co-operation

Co-operation

Co-operate with all other trades and attend upon the Concretor and Carpenter to set out all required penetrations and to ensure that all wiring and fittings are correctly incorporated as work proceeds. The Carpenter will provide and fix all necessary dwangs and timber supports in locations determined by the Electrician.

12.3.3 Workmanship

Qualifications

All electrical work shall be carried out by, or under the direct control of, registered tradesmen, and shall be to recognized high standards. All work shall be such as to leave a neat, efficient and robust installation. Neatly label switchboards to identify each circuit.

Cutting & Checking Timber

The cutting away and checking of timbers shall be limited to such dimensions as will not prejudice the purpose for which the timber is used; observe NZS 3604: 2011 restrictions on the holing and checking of joists and beams. Chasing and checking of other materials shall be only to approval.

Protection

Adequately protect all surfaces. Any damage to fittings or surfaces made good by the appropriate trade at the Electrician's expense.

12.3.4 Wiring

Wiring Quality

Joints within cable runs will not normally be accepted. TPS cable shall be adequately supported, and clipped at regular intervals. At terminations all strands of conductors shall be fully secured in a terminal block or clamped under a screw head washer; do not cut away any strands. Wiring which terminates in enclosed fittings and/or where subject to heat liable to cause deterioration, shall be high temperature type, with the tails made off with heat resisting sleeves, to protect the permanent wiring.

Wiring Cable

Wire lights in 1.5mm 3 core - 7.5 amps loading max per circuit (allow for 100w to all light fittings unless identified otherwise).
Wire power outlets in 2.5mm 3 core - 7 maximum GPO singles or doubles per circuit. Assess power outlets for specific equipment and allow accordingly.

Conceal Wiring

Conceal all wiring except as noted on drawings or below. All wiring cast into concrete shall be run in conduit pipes. All cables shall be stranded (single core is unacceptable).

Wiring Layout

Wire more or less parallel to and at right angles to the structural elements - avoid any diagonal wiring. Layout of the principal distribution wiring shall be to approval. Position all wires to minimise the risk of damage from subsequent nailing of linings etc.

Wiring in Timber Framing

Generally, do not run TPS horizontally within timber walls except in the area up to 300mm above floor. Wire in the ceiling framing and drop vertically to outlets and switches.

Exterior Lighting Wiring

Wire exterior lighting in screened cable.

12.4 Systems

12.4.1 Earth

Earth

Provide a driven main earth suitable for the full installation, close to the meterboard, complying fully with all appropriate regulations and to the complete approval of a certified inspector. Bond all exposed metals, including light fittings and piped services and provide earth conductors for the entire system. Sheathing to any neutral screened cables may be used for earthing.

12.4.2 Mains

Mains, Single Phase, Underground

Install a neutral screened 16mm main cable underground (depth, cover/protection, backfilling, signal strip etc. to comply with all relevant regulations) from the grid connection position noted on the Site Plan along the route indicated to the meterboard, positioned where shown on the Floor Plan, and make appropriate arrangements for the grid connection. Install pilot as required. The meterboard shall be metalclad with a meter reading window, recessed maximum depth into the wall and at 2m to the top of the board, with the meters and water heater controllers by the supply company nominated by the Principal. Install all switches and fuses that are necessary. From the meterboard run (route to approval) a neutral screened 16mm main plus controllers etc. to the switchboard.

12.5 Materials & Control

12.5.1 Materials

Material Quality

All materials delivered with packaging and labeling intact. All required incidentals (insulating tape, seals, fixings, etc.) shall be completely appropriate for the application involved. The use of items damaged in any way is subject to approval in each instance.

12.5.2 Switchboard

Single Switchboard

The switchboard shall be an appropriate size standard PDL DBF series board installed fully recessed where shown and at 2m to the top of the board. Install appropriate sized MCB's for all circuits, including a minimum of two power and one lighting RCDs as required to cover all outlets.

12.6 Elements

12.6.1 Appliances

Appliances - Option 2

All appliances are exactly identified on the drawings notes. Main Contractor will establish, in consultation with the Plumber and Electrician, which of them will be supplied by each of these trades.

The Electrician shall supply appliances that are his responsibility, install them exactly in accordance with their manufacturer’s instructions, and protect them until completion.

12.6.2 Light Fittings

Light Fittings - Option 1

All light fittings are identified as to type on the drawing, and will be supplied by the Principal. Take delivery, install in accordance with any directions supplied and protect until Practical Completion.

12.6.3 Tele Communications

Workmanship

Workmanship shall be recognised best trade practice, and in accordance with the manufacturers' recommendations. All work shall be by competent and experienced operatives.

12.6.4 Other Wired Services

Other Wired Services

Co-operate with all other trades to ensure that the following services are installed complete and in accordance with their manufacturer’s recommendations with all normal or necessary incidentals and with all wiring concealed.

-SKY TV.
-Stereo Unit.
-Garage door operating mechanisms.
-Wall mounted fan heaters.
-Front door bell as noted - supply and install.
-Kitchen, laundry and wet areas air exhaust fans and ducting as noted - supply and install.
-Infrared / movement / daylight sensor switches as noted.
-Under-tile electric heating to the bathroom and shower room complete with thermostat control installed where shown. Supply and install (immediately prior to tiles installation) exactly to the suppliers recommendations.
-Heated towel rails to bathroom and shower room.

-Spa pool equipment will be installed complete by the Plumber. Supply power through weather proof connection, with an isolating switch.
-Hot water cylinders installed complete by the Plumber. Supply and connect.
-Heat pump
-Supply a Heavy Duty TV Aerial (suitable for TV1, 2, and 3, Sky, and all local and community TV stations) and install on the roof ridges where directed, stayed against wind, and with all connections compatible with the roofing and waterproof. Feed to the outlets shown with the complete system exactly to aerial suppliers recommendations.
-Heating.
-Install ceiling fans with variable speed controllers supplied by owner.

12.7 Interconnected Smoke Alarms

12.7.1 Scope

Scope
Supply, install, and commission Interconnected Smoke Alarms to the locations and layout shown on the drawings, complete with accessories. All aspects of this work shall be in accordance with the smoke alarm manufacturer's product specification and installation requirements, other product manufacturers' recommendations, the electrical specification, and as shown on the drawings.

12.7.2 Co-operation

Co-operation
Co-operate with other trades to ensure that all preliminary and preparatory works are completed to specification and as shown on the drawings.
Co-ordinate with other trades to install Interconnected Smoke Alarms as required.

12.7.3 Workmanship

Workmanship
All work shall be carried out by experienced and competent tradesmen in accordance with the manufacturer's requirements, the electrical specification and drawings, and the related standards, electrical regulations and code requirements.
All work shall be such as to leave a neat, efficient and robust installation.

12.7.4 Power Supply

Permanent 230 V a.c. Mains Supply
Interconnected smoke alarms shall be powered from a permanently energised 230 v a.c. mains power supplied from the unswitched side of a commonly used circuit, and shall include either a long-life battery backup or long life (10yr minimum) built-in rechargeable energy storage device.

12.7.5 Alarm Type

Multi-sensor Type Smoke Alarms
Install interconnected Multi-sensor type smoke alarms.

Manufacturer, brand name & type:

12.7.6 Installation

Installation
Install the interconnected smoke alarms on ceilings, or as shown otherwise, to the layout shown on the drawings in strict accordance with the manufacturer's instructions. Do not install smoke alarms in dead air spaces or obstructions where dead air spaces may be created.

Sloping Ceilings
Install smoke alarms to sloping ceilings at the high end of the ceiling slope.

Beams & Bulkheads
Do not install smoke alarms to exposed bulkheads, beams, joists or purlins greater than 300mm deep.

Forced Ventilation
Do not install smoke alarms closer than 400mm to any forced-air supply opening or to any blade of a ceiling fan.

12.7.7 Completion

Completion
Check that the smoke alarms have been correctly installed and wired.
Commission smoke alarms to the required operation in accordance with the manufacturer's instructions. Test alarms to ensure that the warning signal is heard in all bedrooms when all doors between the alarm and bedrooms are closed.
Check for faults and damage, repair/replace as necessary.

Issue to the Owner a copy of the manufacturer's testing and maintenance requirements and product warranty.

13 APPENDIX

1. Ribraft Floors
2. Codemark: Ribraft Floor Systems
3. Garage Door Install set-out
4. Metro Ambie-One Fire
5. Metro Eco-Flue Manual
6. Bowmac Blue Bolt
7. BRANZ Appraisal No.651 (2009) - Thermakraft Covertek 407 Fire Retardant Self-Supporting Roof Underlay
8. CodeMark Certificate of Conformity - Thermakraft Covertek 407
9. BRANZ Appraisal No.329 (2005) Supercourse 500 Damp-Proof Course & Concealed Flashing
10. Scyon Secura Flooring
11. BRANZ Appraisal No.611 (2011) - James Hardie Rigid Air Barriers
12. RAB Installation
13. BRANZ Appraisal No.447 (2010) - Scyon Linea Weatherboard Cavity Cladding
14. CodeMark Certificate of Conformity - James Hardie Linea Weatherboard Direct Fixed and Cavity Cladding
15. Linea Weatherboard
16. BRANZ Appraisal No.467 (2005) - Titan & Exotec Façade Panel Rainscreen
17. Titan Facade Panel
18. BRANZ Appraisal No.294 (2011) - GIB EzyBrace Systems 2011
19. BRANZ Appraisal No.427 (2007) - GIB Aqualine Wet Area Systems
20. Corrugate Product Profile
21. AVA Shower Base
22. Mapelastic GB
23. AVA 900x900 shower: Center waste-Hinged door
24. Optima HWC
25. Fire Alarm SA520

CBI 3100/3111/3112/4711

JAN 2012

RIBRAFT®
TECHNICAL MANUAL

INSTRUCTIONS ON THE USE OF THIS MANUAL

This Manual consists of three Sections:

Section 1: Firth RibRaft Floor System Design Information

Section 2: Firth RibRaft Floor System Installation Information

Section 3: Firth RibRaft Floor System Verification

Section 1 contains information principally useful for the specifier or building designer. **Section 2** is primarily aimed at the person on site installing the Firth RibRaft Floor system. While **Section 3** describes the required verification checks.

This document contains design and installation information. A variation to any of the information given requires specific engineering design and is hence beyond the scope of this document.

Firth RibRaft Floor System can be constructed for all slab-on-ground concrete floors for domestic or residential buildings that fall within the scope of NZS 3604:2011 "Timber Framed Buildings" and Clause 3 "Scope" of Section 1 of this Manual. The design and installation details in this Manual shall be used to design and construct such a floor.

The Firth RibRaft Floor System is covered by the DBH Codemark®. This is conditional on the system being used as described in CertMark Australasia certification decision, which in turn requires design in accordance with Section 1 and installation in accordance with Section 2 of this Manual and on site Verification in accordance with Section 3.

Note that a DBH Codemark means that if this manual is rigidly followed the relevant Building Control Authority will automatically provide a building permit without the need for producer statements. To comply with the manual does mean that Firth Concrete must be used.

CONTENTS

SECTION 1

1	**GENERAL**	**4**
2	**TECHNICAL DESCRIPTION**	**4**
2.1	Overview	4
2.2	Pods	4
2.3	Steel	4
2.4	Concrete	4
3	**SCOPE**	**5**
3.1	Structure Limitations	5
3.2	Live Loading	6
3.3	Dead Loading	6
3.4	Building Types	6
3.5	Foundation Soils	6
3.6	Flow Diagrams	6
4	**CONSTRUCTION DETAILS**	**8**
4.1	Pod Layout	8
4.2	Edge Beam Width and Reinforcement	9
4.3	Internal Ribs (non load bearing) Width and Reinforcement	9
4.4	Internal Ribs (load bearing) Width and Reinforcement	9
4.5	Mesh Reinforcement	9
4.6	Re-entrant Corners	9
5	**LATERAL RESISTANCE**	**10**
5.1	Earthquake Resistance	10
5.2	Wind Resistance	10
5.3	Shear Keys	11
6	**OTHER DESIGN DETAILS**	**11**
6.1	R-Values	11
6.2	Shrinkage Control	12
6.3	Services Detailing	12

SECTION 2

1	**GENERAL**	**15**
2	**SITE REQUIREMENTS**	**15**
2.1	General	15
2.2	Temporary Excavations	15
2.3	Surface Water	15
3	**INSTALLATION PROCEDURE**	**16**
3.1	Site Preparation	16
3.2	Earthworks	16
3.3	Shear Keys	16
3.4	Plumbing and Services	16
3.5	Sand Blinding	17
3.6	Damp Proof Membrane	17
3.7	Edge Formwork	17
3.8	Laying the Pods and Spacers	17
3.9	Reinforcing Steel	18
3.9.1	Edge Beam Steel	18
3.9.2	Rib Steel	18
3.9.3	Mesh Reinforcing	19
3.9.4	Re-entrant Corner Steel	19
3.10	Concrete Installation	19
3.10.1	Placing	19
3.10.2	Finishing	19
3.10.3	Curing	20
3.11	Shrinkage Control Joints	20
3.12	Removal of Formwork	20
3.13	Brick Veneer	20
3.14	Landscaping/Paving	20
3.15	Ongoing Maintenance	20
4	**SHEAR KEYS**	**20**

SECTION 3

1	**DESIGN**	**22**
2	**CONSTRUCTION**	**22**

FIRTH RIBRAFT FLOOR SYSTEM

SECTION 1: DESIGN INFORMATION

1 GENERAL

This Section of this Manual contains design information not requiring specific engineering input for the Firth RibRaft Floor System (the system). Full information on the installation procedures is described in Section 2 of this Manual (Installation Information). Where Standards are referenced in this manual, these shall include the latest amendments.

2 TECHNICAL DESCRIPTION

2.1 Overview

The Firth RibRaft Floor System is a reinforced concrete waffle raft floor slab-on-ground. It consists of an 85mm thick slab supported by a grid of ribs normally 100mm wide at 1200mm x 1200mm centres. The overall depth is 305mm. Edge beams and ribs under load bearing walls are 300mm wide to provide for the extra load carried by these members. Where heating coils of less than 25mm diameter are embedded in the topping, the slab concrete thickness shall be 110mm meaning the overall thickness is 330mm.

2.2 Pods

Firth RibRaft polystyrene pods 1100mm square and 220mm thick are placed directly on levelled ground and are arranged in such a way as to form a reinforced concrete floor slab with a grid of reinforced concrete ribs and edge beams when concrete is placed onto them. Pods may be cut to suit specific architecture layout and also to accommodate services. (300mm thick pods are available if needed for deeper edge beams and internal ribs for construction following specific engineering design. Such uses are outside the scope of this document.)

2.3 Steel

Reinforcing steel in the slab shall consist of Welded Reinforcing Mesh complying with AS/NZS 4671:2001 with a minimum weight of 2.27kg/m², a lower characteristic stress of 500MPa, square configuration of orthogonal bars between 150 to 300mm centres, and ductility class L or E, hereafter referred to as "665 mesh, or mesh". The reinforcing bars in the ribs and edge beams shall conform to AS/NZS 4671:2001 "Steel Reinforcing Materials". Specifically designed spacers are used to position the polystyrene pods and the rib and edge beam reinforcing steel bars in a secure manner until the concrete is placed. The reinforcing mesh is held in place by mesh chairs. Conventional timber or steel formwork is used to form the edge of the slab.

2.4 Concrete

One of the following Firth concrete products shall be used in the system:

1) Raftmix – a 20MPa 100mm slump structural mix available in either a 13mm or more usually a 19mm nominal aggregate size. This mix is normally placed in the floor straight from the concrete truck chute and if necessary by wheelbarrow over planks set up over the pods.

2) Raftmix Pump – a 20MPa 100mm slump pump mix available in either a 13mm or more commonly a 19mm nominal aggregate size. The selection of aggregate size may be determined either by the capability of the available concrete pump or by the concrete placer's preference.

The exception being for buildings constructed in the 'sea spray zone' (i.e. within 500m of the sea including harbours, within 100m of tidal estuaries or inlets, on offshore islands and elsewhere as defined as exposure zone D in 4.2.3.3 of NZS3604) in which case one of the following Firth concrete products shall be used in the system:

1) Raftmix25 – a 25MPa 100mm slump structural mix available in either a 13mm or more usually a 19mm nominal aggregate size. This mix is normally placed in the floor straight from the concrete truck chute

and if necessary by wheelbarrow over planks set up over the pods.

2) Raftmix Pump25 – a 25MPa 100mm slump pump mix available in either a 13mm or more commonly a 19mm nominal aggregate size. The selection of aggregate size may be determined either by the capability of the available concrete pump or by the concrete placer's preference.

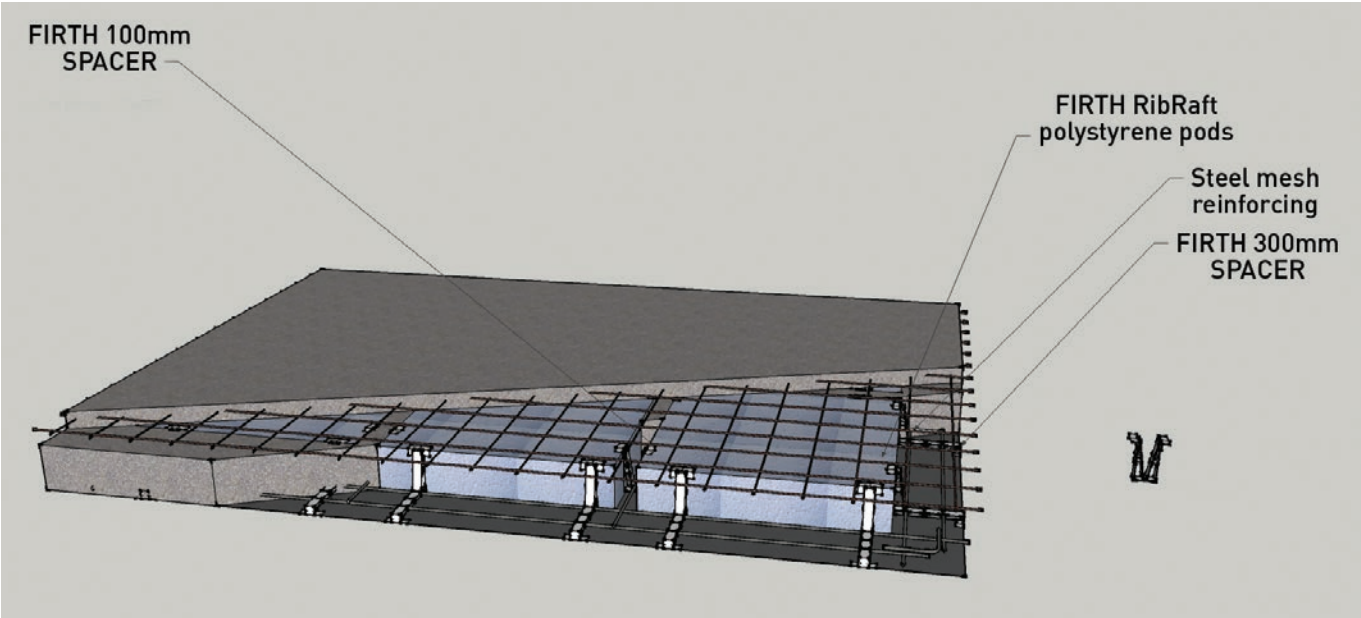

Figure 1 *The RibRaft System*

3 SCOPE

This Clause sets out the limitations that apply to the use of the system to ensure that specific engineering input is not required. The concrete floor slab for buildings or ground conditions that do not meet this scope must be subjected to specific engineering design to comply with the requirements of the New Zealand Building Code.

3.1 Structure Limitations

Specific engineering input shall not be required only where the structure supported by the system complies with the following criteria:

- The structure supported by the system is constructed in a location where the Seismic Hazard Factor Z (defined in NZ1170.5) is less than or equal to 0.45 (refer to figure 6).
- The system is laid level, and is not stepped.
- The structure supported by the system has no basement, part basement or foundation walls.
- The total height from the lowest ground level to the highest point of the roof shall not exceed 10m.
- The structure supported by the system has a roof pitch limited to 60 degrees maximum from the horizontal.
- The maximum height of each storey of the structure supported by the system is 3m.
- Only ground floor walls of the structure supported by the system are permitted to be "heavy external walls" (as defined in Clause 3.3).
- The roof truss span shall be less than or equal to 12m when the roof and ceiling loads are supported entirely by the external walls.
- Where internal load bearing walls are used to support the roof or floors, the loaded dimensions stated in Tables 8.2 and 14.10 of NZS3604:2011 shall apply, and the load bearing wall shall be supported on a 300mm wide load bearing rib as detailed in this manual.
- Floors may be of unlimited size provided that the maximum dimension between free joints shall not exceed 30m. Where free joints are required they should be detailed in accordance with NZS3604:2011.

3.2 Live Loading

The live loading cases of structures covered by these designs are:

- 1.5kPa and 3.0kPa as per NZS 3604:2011 "Timber Framed Buildings".
- 13kN concentrated load in garage over area of 0.3 x 0.3m (vehicle limited to 2500kg gross).

3.3 Dead Loading For Use With This Manual

The dead load cases of structures covered by these designs are:

- Light external walls with total mass not exceeding 60kg/m²– e.g. timber framing with weather boards and interior wall linings.
- Heavy external walls with total mass greater than 60kg/m² but not exceeding 290kg/m² – e.g. timber framing with masonry veneer or partially filled 20 series masonry blocks.
- Internal walls with total mass not exceeding 45kg/m² – e.g. timber framing and linings.
- Light roofs with total mass not exceeding 45kg/m² – e.g. ceiling linings and metal roof, including framing.
- Heavy roofs with total mass greater than 45kg/m² but not exceeding 85kg/m² – e.g. ceiling lining and concrete tiles or slates, including framing.
- Mid-floors with total mass not exceeding 60kg/m² – e.g. timber framing and flooring, including ceiling linings.
- Heavy internal walls and/or load bearing internal walls supported on a load bearing rib.

3.4 Building Types

The designs given in this Manual are limited to where the system supports Building Types A to D as described in Table 1. The classification of wall weights is as detailed in Clause 3.3 of this Section. Single and two storey shall be as defined in NZS 3604:2011.

Table 1 *Building Identifier*

Building Type	Description	Ground Floor External Walls	Second Storey External Walls
A	Single Storey	Light	
B	Single Storey	Heavy	
C	Two Storey	Light	Light
D	Two Storey	Heavy	Light

3.5 Foundation Soils

The system may be used when the supporting ground meets the definitions of "good ground" given in Section 3 of NZS 3604:2011: (as modified by B1 of the Building Compliance Documents). In addition, the system shall not be used for damp sites i.e. where it can be reasonably expected that the ground water level could come within 600mm of the underside of the system. The acceptability of the ground shall be verified in accordance with Clause 3.1.3 of NZS 3604:2011.

Where the ultimate bearing capacity required of the supporting ground is verified by Scala Penetrometer testing in accordance with Clause 3.3 of NZS 3604:2011. The bearing capacity shall be considered adequate when the number of blows per 300mm depth of penetration below the underside of the system at each test site, exceeds the values given in Table 2 below. For RibRaft foundations compliance with Table 2 allows ultimate bearing capacities of less than 300kPa. However, with the exception of bearing capacity all other requirements in NZS3604:2011 for "good ground" shall be complied with.

Table 2 *Scala Penetrometer Blows Required For Determining Ultimate Bearing Capacity*

Building Type	Min. blows per 300mm depth
A	6
B	7
C	8
D	9

3.6 Flow Diagrams

The flow diagrams on the following pages (adapted from NZS 3604:2011) will help in determining whether the non-specific details for the system can be used for the purposes of the concrete floor slab construction. There are two checks in the process. The first is to determine whether the proposed building complies with the requirements set out in this Manual (Building Check), and the second is to determine whether the site complies with the requirements set out in this Manual (Site Check).

(Note: NZS 3604:2011 provides for parts of buildings to be considered as individual buildings. These flow diagrams apply to those parts of the building where slab-on-ground is being considered and where the part of the building can be considered as an individual building under NZS 3604:2011).

Figure 2 *Building Check Flow Diagram*

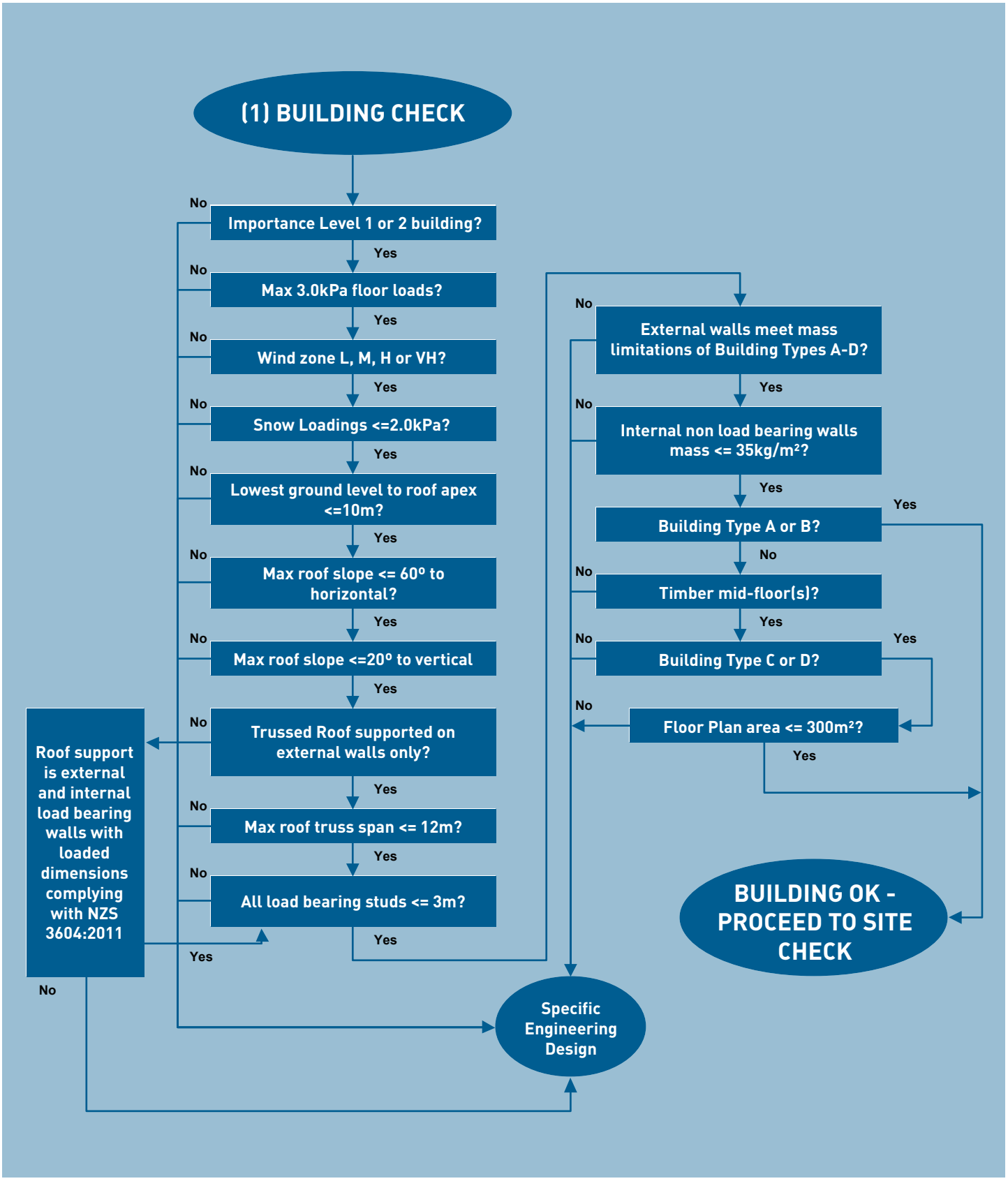

Figure 3 *Site Check Flow Diagram*

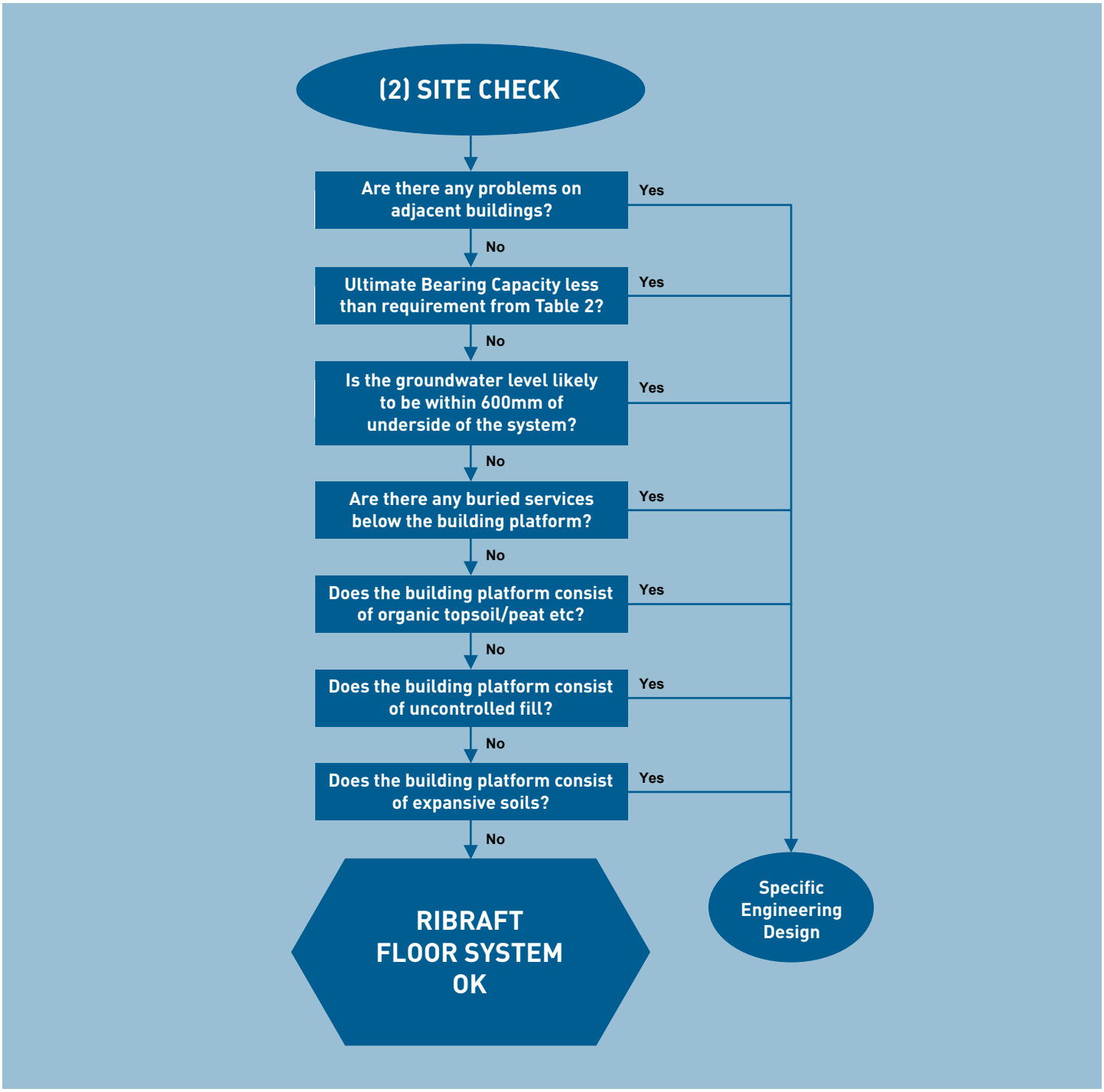

4 CONSTRUCTION DETAILS

Standard construction details for the system are provided here for buildings that fall within the above scope.

4.1 Pod Layout

RibRaft polystyrene pods supplied by Firth (1100 x 1100 x 220mm thick) shall be placed on levelled ground and arranged in a waffle pattern. The pods are used as void formers while the concrete is curing. These pods are an integral component of the system and shall not be substituted.

Pods shall be placed so as to provide the necessary spacing between the edge beams and ribs as described below. The first rib out from the edge beam shall have a maximum clear separation of 1100mm however in all other cases the centre to centre distance between the ribs, whether they are 100mm or 300mm wide, shall be 1200mm. In the case of 100mm ribs this centre to centre spacing is achieved by the 1100mm square pods however between 100mm and 300mm ribs, or between two 300mm ribs, the pods shall be cut down to suit. Pods may be cut down to size but shall not be added to, where this is necessary to suit the building layout,

penetrations or orientation of beams and ribs.

Figure 4 below shows a typical layout of the pods and ribs. Note the part pods around the edge, where the building shape dictates, and adjacent to the 300mm rib.

Firth suggests that when drawing the building plan, a generic RibRaft grid (100mm wide ribs at 1200mm centres) is set out using the corner of the building as a starting point. The location of any load bearing ribs are identified and pods cut to establish 300mm wide ribs. The most cost effective solution being a simple grid layout which requires minimum cutting of the pods. Ribs can be used at less than 1200mm centres, however it is more cost effective to use the 1200mm centres wherever practicable.

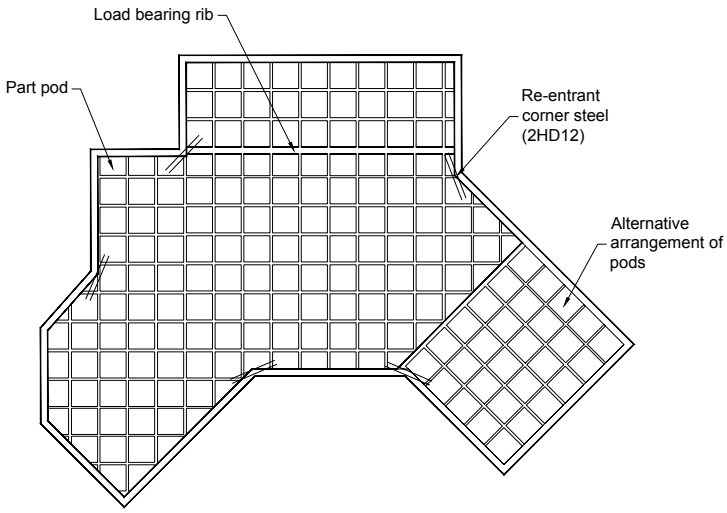

Figure 4 *Typical RibRaft Plan*

4.2 Edge Beam Width and Reinforcement

Edge beams around the perimeter of the floor slab shall be 300mm to provide bearing capacity for external load bearing walls, and contain 2-HD12 bars (Grade 500E) as bottom steel and 1-HD12 bar (Grade 500E) in the top. This top bar shall be tied to the underside of the reinforcement mesh. Refer Figure 5, below for construction details. The edge beam shall be rebated for brick veneers where necessary as shown in Figure 5(C).

4.3 Internal Ribs (non load bearing) Width and Reinforcement

Each standard internal rib shall be 100mm wide and shall contain 1-HD12 steel bar (Grade 500E) held in place at the bottom of the rib by a Firth spacer. Refer Figure 5E for construction details.

4.4 Internal Ribs (load bearing) Width and Reinforcement

For all load bearing walls and heavy internal walls, the pods shall be cut to create a 300mm wide rib directly under the load bearing wall, with 2-HD12 (Grade 500E) steel bars as bottom steel. Refer Figure 5(D) for construction details under load bearing walls.

Where the load bearing ribs meet and terminate at an edge beam or internal rib the bottom reinforcement from the load bearing rib shall be bent into the adjacent rib and tied together. The reinforcement shall lap for at least 720mm.

4.5 Mesh Reinforcement

The entire floor slab shall be reinforced with 665 Mesh supported on 40mm mesh chairs sitting on the polystyrene pods.

4.6 Re-entrant Corners

In order to limit cracking at the re-entrant, or internal corners, extra steel shall be placed on top of the mesh. These shall be 2-HD12 bars (Grade 500E), 1200mm long tied to the top of the mesh at 200mm centres, with 50mm cover from the internal corner – refer Figure 4.

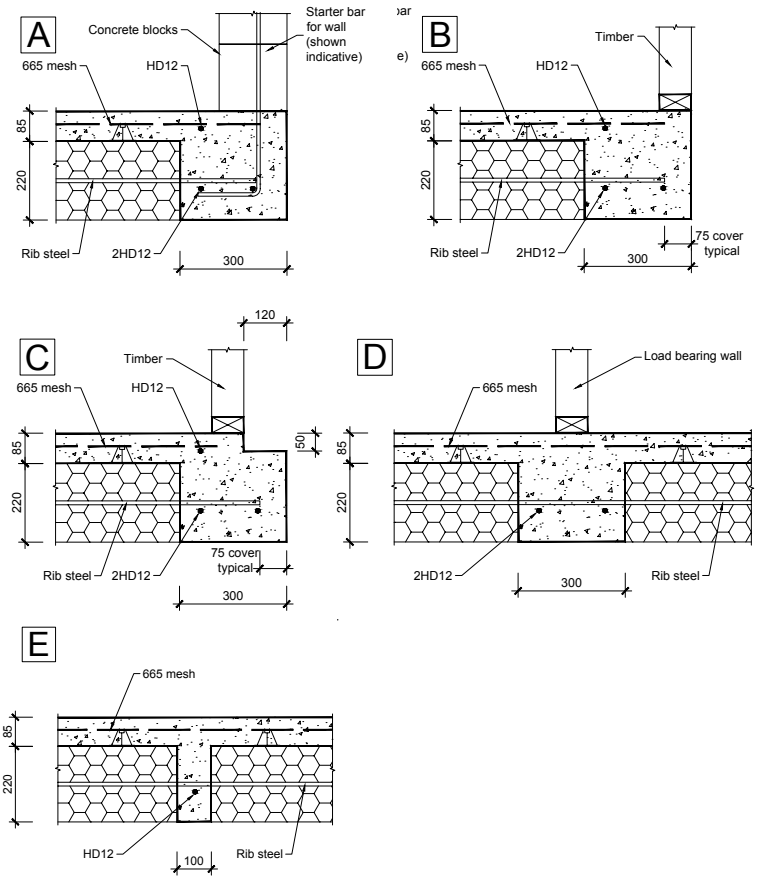

Figure 5 *Standard RibRaft Construction Details*

5 LATERAL RESISTANCE

5.1 Earthquake Resistance

Unlike conventional foundation systems, the Firth RibRaft system is not embedded into the ground.
Sliding resistance to horizontal seismic loads is provided by frictional contact with the soil.
In locations where the Seismic Hazard Factor, Z is greater than 0.45, shear keys may be required to resist seismic loads. Such buildings require specific engineering design and are outside the scope of this document. Refer to figure 6.

Depending on the wind zone and the weight of the building elements this frictional resistance may not be sufficient to provide sliding resistance to wind loads, and specific shear keys may be required, as detailed in clause 5.2.

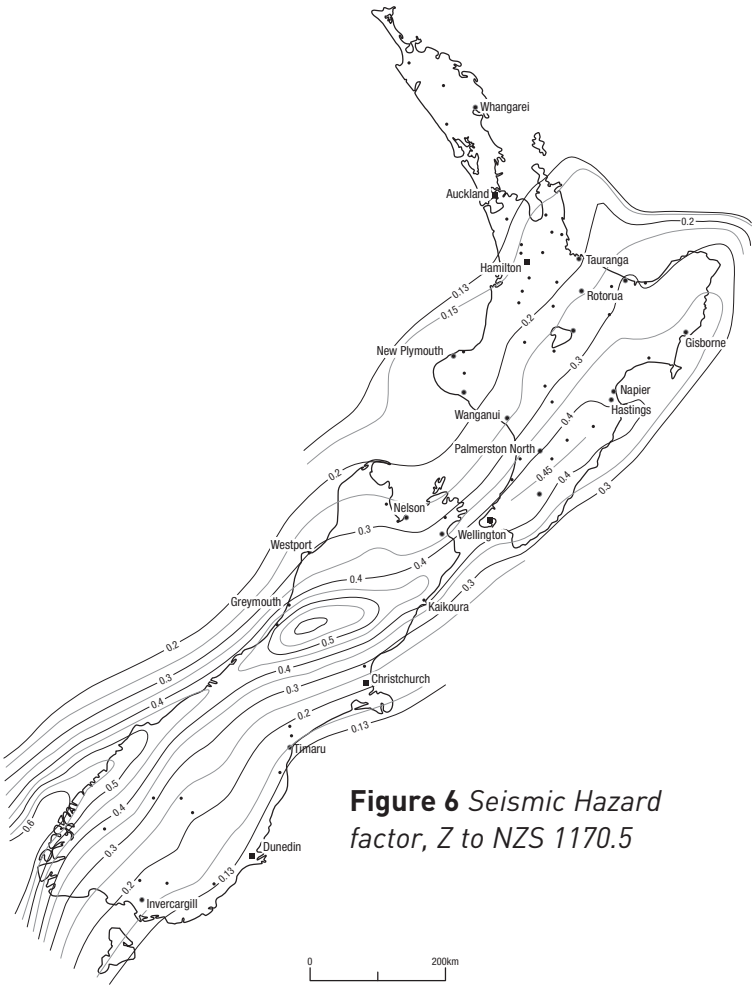

Figure 6 *Seismic Hazard factor, Z to NZS 1170.5*

For the purposes of this Manual, the ground shall be classified as clay or sand according to the following descriptions:

Clay: retains shape when moulded under hand pressure; may stick to boots and hands; cracks and becomes hard, but retains shape, when dried in direct sunlight; and when dug with a spade the cut vertical surface stands.

Sand: Individual particles visible to the unaided eye; when dry will run through the fingers and forms a conical mound if poured; when moist quickly dries out under direct sunlight; and when dug with a spade the vertical surface does not stand for long.

5.2 Wind Resistance

The building's bracing demand from wind loading shall be assessed from Section 5 of NZS 3604:2011 for both directions (i.e. along and across the building). The bracing capacity of the system must exceed the greater of the bracing demands determined.

The bracing capacity of the system shall be determined as the sum of the bracing capacity provided by frictional resistance (i.e. friction between the system and the ground) and the bracing capacity provided by the shear keys (if any) necessary to meet the requirements of Clause 5.2.

The bracing capacity provided by frictional resistance shall be determined from Table 6 depending on the building type, roof weight, and floor live loading.

The bracing capacity provided by the shear keys shall be the sum of the bracing capacity of the individual shear keys determined as follows. If the shear key is in clay, each shear key shall be considered to contribute 170 BU's. If the shear key is in sand, each shear key shall be considered to contribute 200 BU's.

If the bracing capacity of the system, determined from the frictional resistance and the shear keys as described above, is less than the bracing demand further shear keys shall be added until the bracing demand is met.

Building Type	Roof Type	BUs provided per 100m^2 for live loading of:	
		1.5kPa	3.0kPa
A	Light	1150	1267
A	Heavy	1267	1383
B	Light	1800	1917
B	Heavy	1917	2033
C	Light	1617	1833
C	Heavy	1717	1950
D	Light	2267	2483
D	Heavy	2367	2600

Table 6 *Bracing Capacity provided by Frictional Resistance per 100m² of ground floor area.*

5.3 Shear Keys

Shear key piles required by Clause 5.2 must be uniformly distributed around the perimeter of the building, and be located at the edge beam/internal rib junction. Where a shear key is required, the minimum number of shear keys shall be two per floor plan. Where two shear keys are used they shall be placed at diagonally opposite ends of the floor plan.

Construction details of the shear keys shall be as shown on Figure 7 below. Shear keys shall be a minimum of 900mm long. The holes shall be over-drilled at least 100mm and a polystyrene RibRaft Shear Key Support placed into the bottom of each hole. This will support only the plastic (wet) concrete and then allow movement of the shear key if settlement of the supporting ground occurs. The effective end bearing of the shear keys is therefore eliminated.

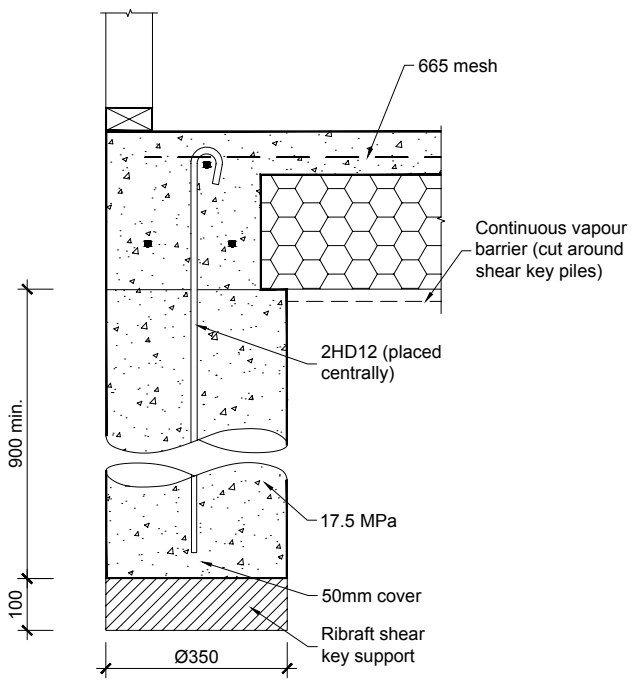

Figure 7 *RibRaft Shear Key*

6 OTHER DESIGN DETAILS

6.1 R-Values

The insulation performance of a building element is measured by the "R-Value". The schedule method is the simplest method to achieve compliance with Clause H1 of the Building Code. Using this method the minimum R-Values required for floors are R1.3 for light timber frame construction, and typically R1.5 for masonry construction. R values of R1.3 can be used for masonry construction if glazing with greater insulation is used (refer NZBC, Clause H1). If in-floor heating is used the minimum required R-Value is increased to R1.9, and the resistance to thermal movement into the room must be one tenth of that to the outside environment.

The R-Value of a RibRaft floor is dependent on the floor area to perimeter ratio, and the details of the floor perimeter. The R-Value for various solutions are illustrated below. The R-Values have been independently calculated using NZS4214:2006 "Methods of Determining the Total Thermal Resistance of Parts of Buildings," though modified for perimeter heat loss using recommendations from the Building Research Establishment.

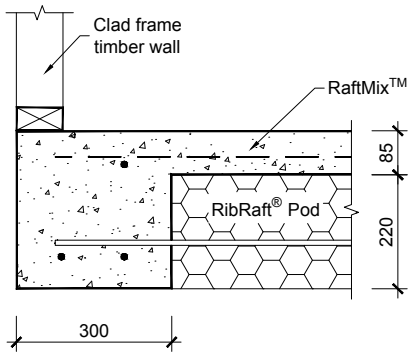

	Floor Area To Perimeter Ratio m^2/m										
	1.00	1.25	1.50	1.75	2.00	2.25	2.50	2.75	3.00	3.50	4.00
R-value $m^2\ {}^oC/W$	1.39	1.51	1.63	1.74	1.85	1.96	2.07	2.18	2.28	2.48	2.68

Figure 8 *RibRaft R-Values for 90mm thick walls on the floor edge.*

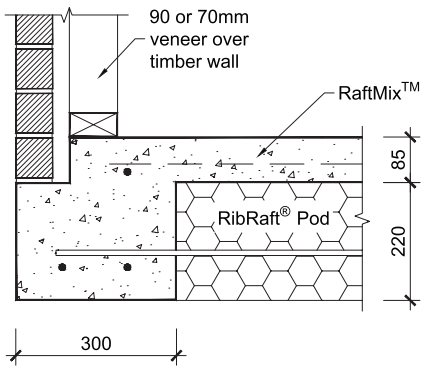

	Floor Area To Perimeter Ratio m^2/m									
	1.25	1.50	1.75	2.00	2.25	2.50	2.75	3.00	3.50	4.00
R-value $m^2\ {}^oC/W$	1.54	1.67	1.80	1.93	2.05	2.17	2.28	2.40	2.62	2.84

Figure 9 *RibRaft R-Values for 70-90mm thick veneer, cavity, and 90mm walls.*

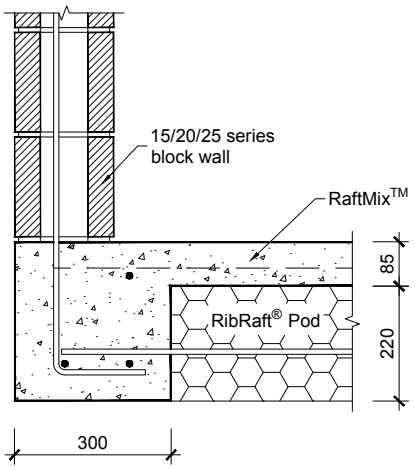

	Block	Floor Area To Perimeter Ratio m^2/m										
		1.00	1.25	1.50	1.75	2.00	2.25	2.50	2.75	3.00	3.50	4.00
R-value $m^2\,^oC/W$	15 series	1.46	1.59	1.71	1.84	1.96	2.07	2.19	2.30	2.41	2.63	2.84
	20 series	1.52	1.66	1.79	1.92	2.04	2.17	2.29	2.40	2.52	2.75	2.93
	25 series	1.57	1.72	1.85	1.99	2.12	2.24	2.37	2.49	2.61	2.85	3.08

Figure 10 *RibRaft R-Values for various thicknesses of masonry walls.*

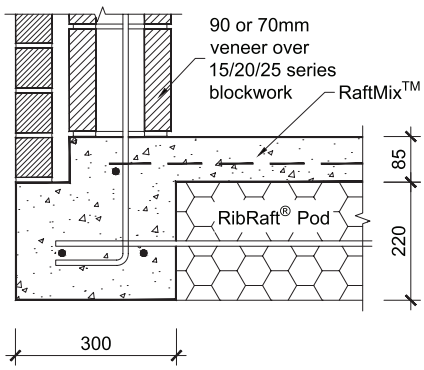

	Block	Floor Area To Perimeter Ratio m^2/m									
		1.25	1.50	1.75	2.00	2.25	2.50	2.75	3.00	3.50	4.00
R-value $m^2\,^oC/W$	15 series	1.59	1.73	1.86	1.99	2.12	2.24	2.37	2.49	2.72	2.95
	20 series	1.64	1.78	1.92	2.06	2.19	2.32	2.44	2.56	2.81	3.04
	25 series	1.69	1.83	1.98	2.11	2.25	2.38	2.51	2.64	2.88	3.12

Figure 11 *RibRaft R-Values for 70-90mm thick veneer, cavity, and various thicknesses of masonry walls.*

6.2 Shrinkage Control

Shrinkage control joints reduce the risk of unwanted cracks, and their placement needs to be carefully considered where cracking could be unacceptable. Factors to consider are the type of floor finish, the location of ribs and ground beams, underfloor heating and the effect of piles restraining shrinkage. Shrinkage control joints shall be saw cut after hardening. The saw cuts shall be cut to a depth of 25mm and shall be cut no later than 24 hours. The shrinkage control joints shall be positioned to coincide with major changes in floor plan. Where the concrete is to be exposed, or brittle covering placed over, the maximum intermediate bay sizes shall be limited to 6m.

Bay dimensions formed by shrinkage control joints shall be limited to a maximum ratio of length:width of 2:1.

Shrinkage control joints shall be placed over 100mm wide internal ribs wherever possible. Where a shrinkage control joint runs along the line of a 300mm wide load bearing rib then the joint shall be located directly above one edge of the 300mm rib.

Supplementary reinforcing using 2-HD12 bars (Grade 500E) shall be used at all re-entrant corners as shown on Figure 4. These bars shall be 1200mm long, 200mm apart, tied to the top of the mesh, with 50mm side cover and shall not be placed across any shrinkage control joints.

6.3 Services Detailing

Ideally, services ducts shall be conveyed underground to their plan location then brought up through the polystyrene pod and the concrete floor slab, but this may not always be possible. Services shall not be placed within any concrete except to cross that section of concrete i.e. services shall not run along ribs or edge beams.

The maximum diameter of the services shall be as outlined in Table 7.

Table 7 *Maximum Diameter of Pipe Services*

Element	Vertical Services	Horizontal Services
300m wide edge beam	50mm in a duct 50mm larger diameter than pipe	50mm in a duct 50mm larger diameter than pipe unless detailed as per note 2
500mm localised wide edge beam [1]	100mm in a duct 50mm larger diameter than pipe	50mm in a duct 50mm larger diameter than pipe, see note 2
300mm wide internal load bearing rib	50mm in a duct 50mm larger diameter than pipe	50mm in a duct 50mm larger diameter than pipe, see note 2
100mm wide internal rib	Nil	50mm in a duct 50mm larger diameter than pipe, see note 2
Slab	110mm in a duct 50mm larger diameter than pipe or for large services 450mm square [4] see also note 2.	Nil

Notes

(1) For situations where a 100mm diameter pipe is required to pass through the edge beam, the edge beam shall be locally increased in width to a minimum of 500mm wide. This shall be achieved by keeping flush the outside face of the edge beam and removing 200mm from the pod. The width shall remain at 500mm for a distance of 600mm beyond the service pipe. Refer to figure 12 for details.

(2) The need for a duct 50mm larger than the service diameter can be deleted when the pipe work does not cross the interface between the bottom of the RibRaft system and the ground at any point along its length. An example would be services laid within the plane of the pods and passing through the edge beam and discharging to a gully trap or similar. In these cases the diameter of the service can be increased to a maximum of 100mm and a service duct is not required. The pipe work shall be wrapped in denso tape where it crosses concrete elements to prevent adhesion between the concrete and pipe work.

(3) Where a gas pipe line runs through the RibRaft floor system, in addition to the requirements above, the pipeline shall enter the building through the outside face of the perimeter foundation beam and be located in the plane of the pods. The aim being to ensure that damage to the gas pipe will most likely occur outside the building envelope should movement occur between the ground and RibRaft in a large earthquake.

(4) Larger penetrations or voids up to 450mm square (e.g. for shower waste/traps) are permitted through the slab provided all the conditions of this paragraph are met. These openings shall be trimmed with 1 HD12 (Grade 500E) bar 1500mm long placed along each side of the opening, tied to the mesh. One set of parallel bars shall be placed on top of the mesh and the other set placed under the mesh. These openings shall not be placed over a rib or edge beam. If necessary, the rib spacing shall be reduced or the pod layout altered to ensure that the opening occurs solely in the slab above a polystyrene pod. Penetrations such as these shall not be installed in garages or other areas where large (>3kN) point loads could be present. Only one penetration greater than 110mm is permitted in the slab above any single pod or part pod. Where two large openings are required to be in close proximity, an internal rib shall separate them. For these large penetrations/ voids in the slab, the services shall not be within 25mm of the edges of the void through which they pass, and the opening shall be sealed to prevent materials entering the subfloor cavities. (This type of opening is normally only required for a shower waste/trap and the installation of the shower will ensure that the void is sealed/covered).

Any services crossing ribs or the edge beam horizontally shall be placed only within the middle third of the member. Except as noted in figure 12, services crossing the ribs vertically shall also be constrained to the middle third of the width of the edge or internal load bearing rib. Except as noted in figure 12 at no stage shall any of the reinforcement bars be relocated or cut to allow for the services (it is acceptable, however to cut the mesh). In some instances this will dictate the location of the ribs. The pods shall be cut to allow for this and if necessary, the spacing of the ribs shall be decreased locally. There shall be 600mm minimum clear spacing in each direction between penetrations through the system.

Except as noted in table 7, all services shall be placed centrally within an opening 50mm greater in diameter than the service duct/pipe, where they pass through the system. This is to allow seismic tolerances to reduce the probability of shearing of the services during a seismic event. Where the services pass through the slab, the opening shall be sealed to prevent materials entering the subfloor cavities. (This can be achieved with Denso tape

and a type of easily compressible foam). A pictorial of some of the above requirements is illustrated in figure 12:

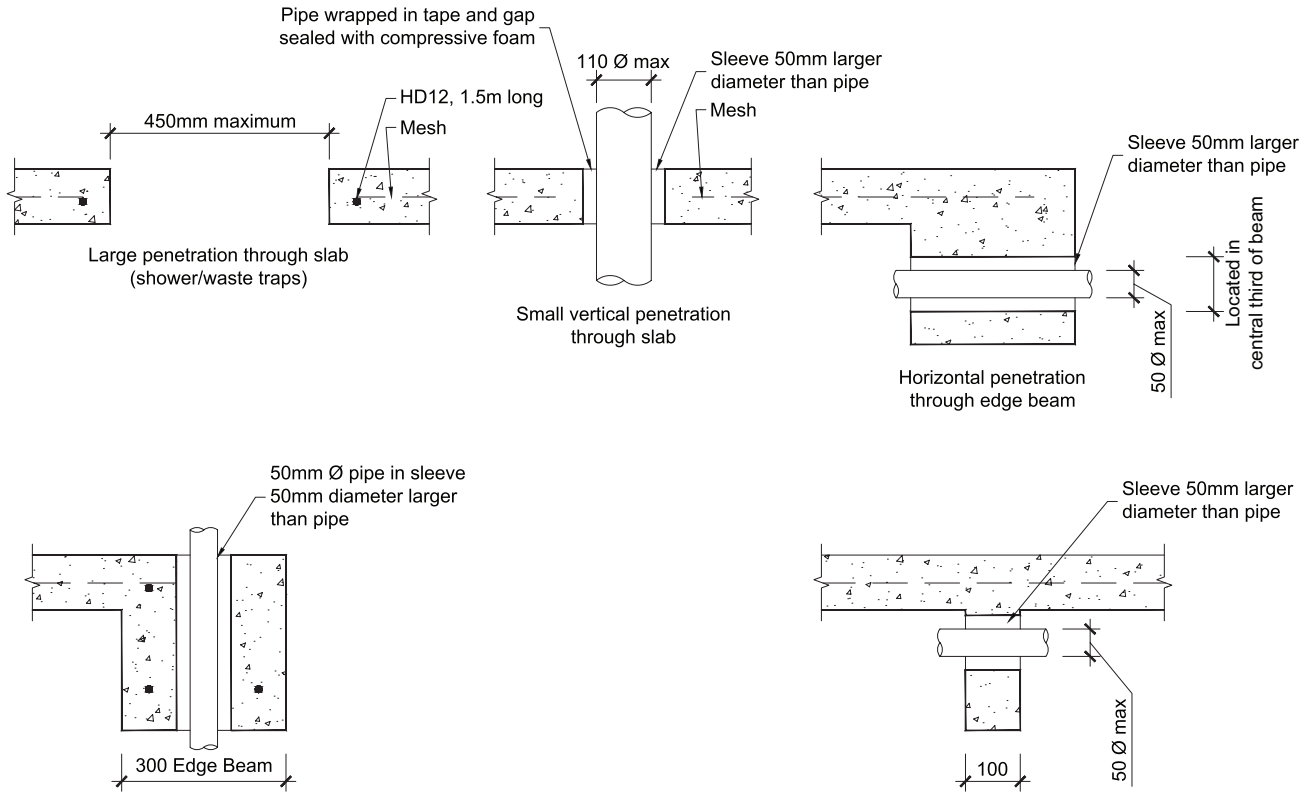

Figure 12 *Example of detailing requirements for services*

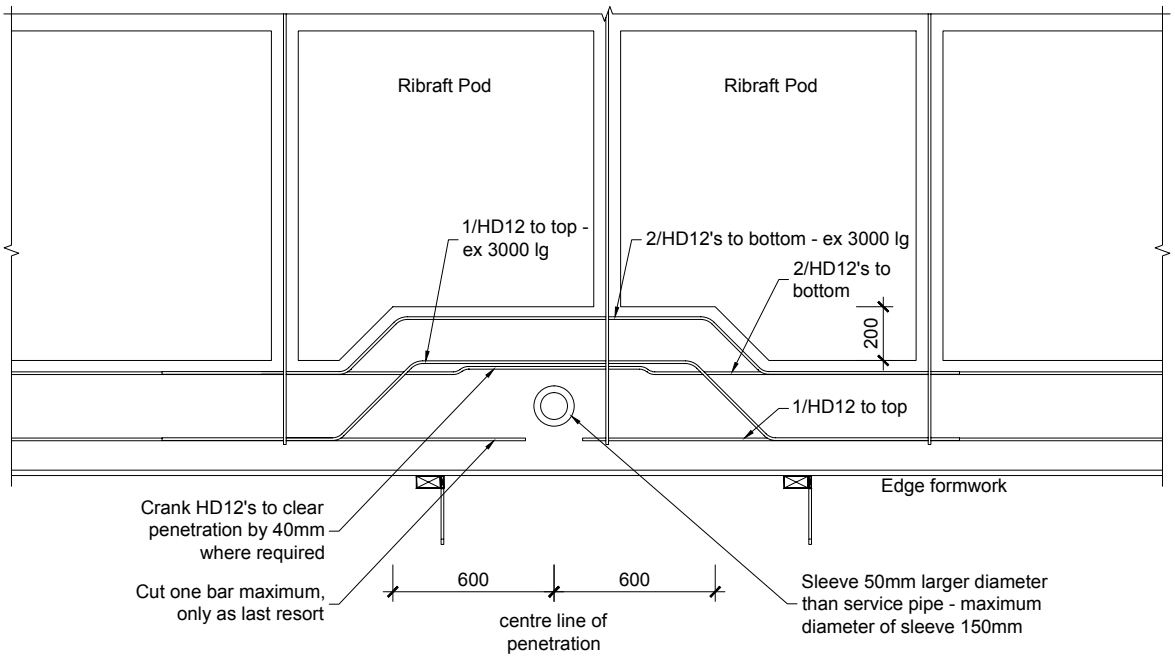

Figure 13 *Localised increase in width at edge beam where vertical services up to 100mm diameter are required*

FIRTH RIBRAFT FLOOR SYSTEM

SECTION 2: INSTALLATION INFORMATION

1 GENERAL

This Section details the installation information required for the Firth RibRaft Floor System (the system). Full information on the design procedures not requiring specific engineering input, and requirements for the site assessment are described in Section 1 of this Manual (Design Information). Where standards are referenced in this manual these shall include the latest amendments.

2 SITE REQUIREMENTS

2.1 General

The site requirements of this Manual are concerned solely with the soil conditions under or immediately adjacent to the system. If a site does not comply with this Manual, the system shall be subject to specific engineering design.

This Section shall only apply for building sites such that:

- The ground is as specified in Section 1 of this Manual;
- Any system erected at the top of a slope (whether fill compacted in accordance with NZS4431, or natural ground) shall be located as shown in Figure 1 so that the finished ground is always outside the dashed line shown. (The vertical distance, V, shall be measured to 50mm below the underside of the slab).

Where the finished ground does not comply with Figure 1, the slope shall be retained by a specifically designed retaining wall.

2.2 Temporary Excavations

No excavation shall take place at a location or in a manner where the stability of the foundation material is likely to be compromised. The backfilled material shall match the compaction and strength of, and have similar properties to, the surrounding material. The sides of the excavation shall be propped as necessary.

Temporary excavations shall be open for no longer than 48 hours and shall take place only above the critical depth line as shown on Figure 2. Should temporary excavations be required below this line, specific engineering design is required.

2.3 Surface Water

Surface water from the site shall not flow across the slab platform. For example, on cut and fill sites the

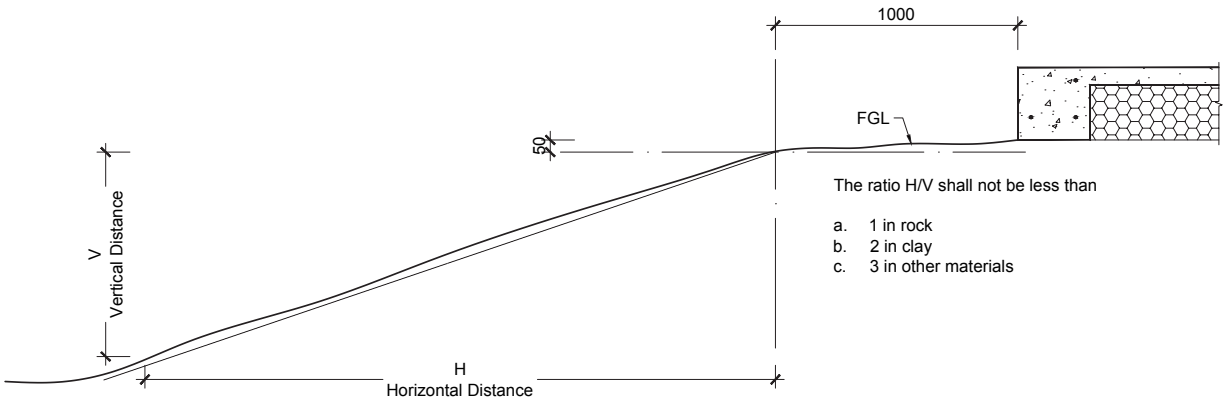

Figure 1 *Relationship of RibRaft to Sloping Ground Surface*

ground uphill from the system shall be graded to direct any surface run-off away from the system as shown in Figure 3.

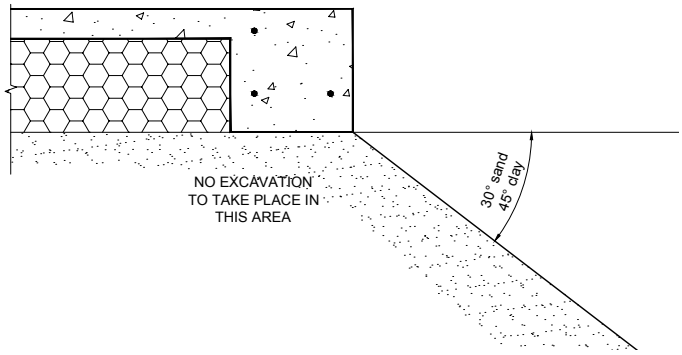

Figure 2 *Temporary Excavation Limited*

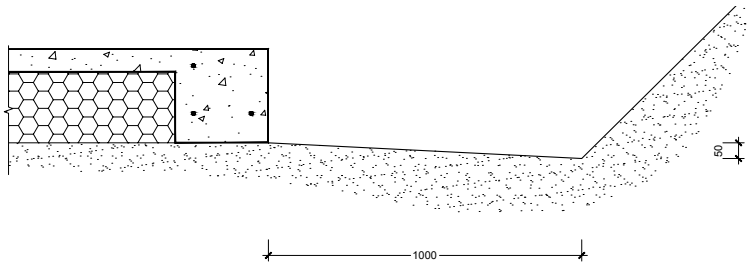

Figure 3 *Site Grading*

3 INSTALLATION PROCEDURE

3.1 Site Preparation

All vegetation, topsoil and other organic or deleterious material shall be removed from the area to be covered by the building (formation area) prior to commencing construction of the system.

3.2 Earthworks

The formation area shall be cut or filled to a level approximately 330mm below finished floor level. Where fill is required to achieve this level, the fill shall be certified by a geotechnical engineer (outside the scope of this Manual) or shall be granular fill in accordance with Clause 7.5.3 of NZS 3604:2011 "Timber Framed Buildings". The formation area shall also extend a minimum of 1000mm beyond the slab perimeter as shown in Figure 4 below. The installer shall confirm the acceptability of the ground over the entire building platform before proceeding with the construction. Refer to Clause 3.5 of Section 1 (Design Information) for requirements.

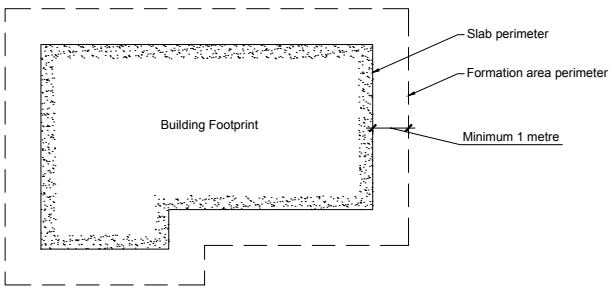

Figure 4 *Plan of Formation Area*

3.3 Shear Keys

Where shear keys are required, the holes shall be drilled following the site clearing and earthworks, in accordance with Clause 4 below, and prior to the construction of the system commencing.

3.4 Plumbing and Services

Plumbing and services required beneath the system should preferably be conveyed underground to their plan location then brought up through the system. The trenching, placing, and bedding of the pipes/ducts and the backfilling of the trenches shall conform to the requirements of the consent documentation. Services shall not be placed within any concrete except to cross that section of concrete i.e. services shall not run along ribs or edge beams. The maximum diameters of the services/ducts shall be as dictated in clause 6.3 of Section 1.

Where required, the services can be installed by removing unnecessary polystyrene and placing pipes within the pod depth. All pipes shall be held firmly in place and have temporary end covers. Any services crossing ribs or the edge beam horizontally shall be placed only within the middle third of the member. Except as noted in figure 12 (section 1) services crossing the ribs vertically shall also be constrained to the middle third of the width of the edge or internal load bearing rib. Except as noted in figure 12 (section 1) at no stage shall any of the reinforcement bars be relocated or cut to allow for the services (it is acceptable, however to cut the mesh). In some instances this will dictate the location of the ribs. The pods shall be cut to allow for this and if necessary, the spacing of the ribs shall be decreased locally. There shall be 600mm minimum clear spacing in each direction between penetrations through the system.

Except as noted in 6.3 of section 1, services shall be placed centrally within an opening 50mm greater in diameter than the service duct/pipe, where they pass through the system. This is to allow seismic tolerances to prevent shearing of the services during a seismic event. Where the services pass through the top of the system, the opening shall be sealed to

prevent materials entering the subfloor cavities. (This can be achieved with Denso tape and a type of easily compressible foam).

Larger penetrations or voids that are required, up to 450mm square (e.g. for shower waste/traps), shall be installed in accordance with all the conditions of this paragraph. These openings shall be trimmed with 1 HD12 bar (Grade 500E) 1500mm long placed along each side of the opening, tied to the mesh. One set of parallel bars shall be placed on top of the mesh and the other set placed under the mesh. These openings shall not be placed over a rib or edge beam. If necessary, the rib spacing shall be reduced or the pod layout altered to ensure that the opening occurs solely in the slab above a polystyrene pod. Penetrations such as these shall not be installed in garages or other areas where large (>3kN) point loads could be present. Only one penetration greater than 110mm is permitted in the slab above any single pod or part pod. Where two large openings are required to be in close proximity, an internal rib shall separate them. For these large penetrations/voids in the slab, the services shall not be within 25mm of the edges of the void through which they pass, and the opening shall be sealed to prevent materials entering the subfloor cavities. (This type of opening is normally only required for a shower waste/trap and the installation of the shower will ensure that the void is sealed/covered).

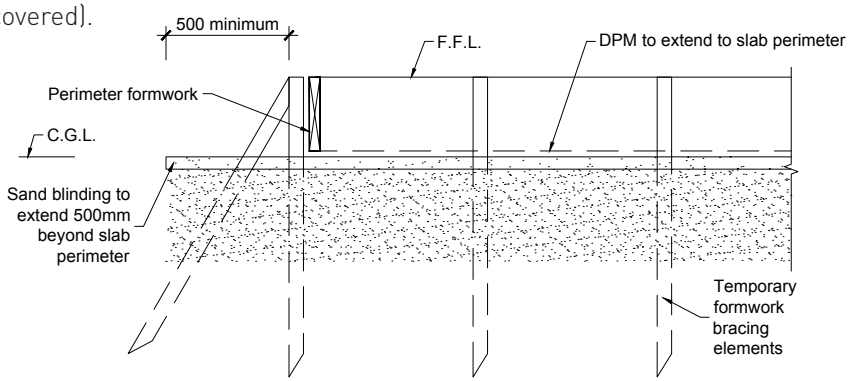

Figure 5 *Sand Blinding/DPM/Formwork Details*

3.5 Sand Blinding

A layer of sand shall be placed, screeded and compacted over the building platform, extending to at least 500mm beyond the system perimeter – refer Figure 5. The maximum thickness of this blinding layer shall be 50mm. The surface shall be level and a minimum of 305mm below finished floor level. A small plate compactor, vibrating roller or similar, should be used to compact the sand blinding layer. When the building platform is clay, it is essential that the blinding sand is compacted onto a clay surface that has not been softened by construction activities. If the clay has been softened (i.e. has a muddy surface layer due to construction activities), remove the softened material from under the RibRaft ribs before placing the sand. If excavation lowers the clay surface to more than 50mm below the underside of the RibRaft, fill shall be placed in accordance with Clause 7.5.3 of NZS 3604:2011 "Timber Framed Buildings". *The sand is required to be level to ensure that pods remain stable throughout the installation of the system.*

3.6 Damp Proof Membrane

The damp proof membrane (DPM) material shall be polyethylene sheet in accordance with NZS 3604:2011. The DPM shall be laid over the entire building platform directly on top of the sand blinding layer, extending to the outside of the edge beam – refer Figure 5 below. The joints shall be lapped not less than 150mm and sealed with pressure sensitive tape not less than 50mm wide. All penetrations of the DPM by plumbing and services or punctures during construction shall also be sealed with pressure sensitive tape. The DPM may extend beyond the edge of the slab i.e. underneath the formwork, or may be folded and stapled up the inside of the formwork. The minimum requirement is that the DPM extends to the outside of the edge beam. It is very important that the DPM is not bunched up at the formwork. The installer shall ensure a square and tidy finish at the underside and at all corners of the edge beam.

3.7 Edge Formwork

The edge formwork shall be constructed ensuring that the requirements of NZS 3109:1997 "Concrete Construction" are adhered to. The formwork shall be adequately supported and braced to prevent any buckling or warping. If the wall is to be constructed in masonry veneer, formwork for a masonry veneer rebate should be adequately fixed to the perimeter formwork.

Thorough cleaning of re-useable formwork and the use of release agents enhances the life and performance of formwork and maintains a quality surface finish.

3.8 Laying the Pods and Spacers

The Firth RibRaft polystyrene pods shall be laid out over the DPM in a regular waffle pattern ensuring direct contact with the ground across the entire pod. The edge beam shall be formed using the Firth approved 300mm spacers (refer figure 9). These shall be placed at a maximum of 1200mm centres along the perimeter of the slab and one per pod or part pod. Ribs supporting a load bearing wall shall be formed using a minimum of one Firth approved 300mm spacer along the edge of each pod or part pod.

Except where a 300mm wide rib is required, each pod or part pod shall always be separated by 100mm using a minimum of one Firth approved 100mm spacer along each edge of each pod or part pod. The ribs in both directions shall form a waffle pattern throughout the slab. It is essential that the ribs and edge beams are straight when the concrete is poured, i.e. the pods need to be lined up. Figure 6 shows a detailed layout of the pods and spacers.

Where the shape of the house plan dictates, it may be more practical to consider the floor to be made up of different segments. The pods in each segment shall be in a regular waffle pattern – refer right hand side of Figure 7. Where these segments meet, the pods shall be cut to suit and the ribs made to join. The non right-angle rib junctions created by this approach are acceptable.

Alternatively, it is also acceptable to keep the orientation of the pods constant throughout the plan and have non right-angle junctions between the ribs and edge beam – refer left hand side of Figure 7.

As can be seen from Figure 7, it is not necessary for the pods to line up perfectly with the edge beam. It is acceptable to cut the pods (i.e. use part pods).

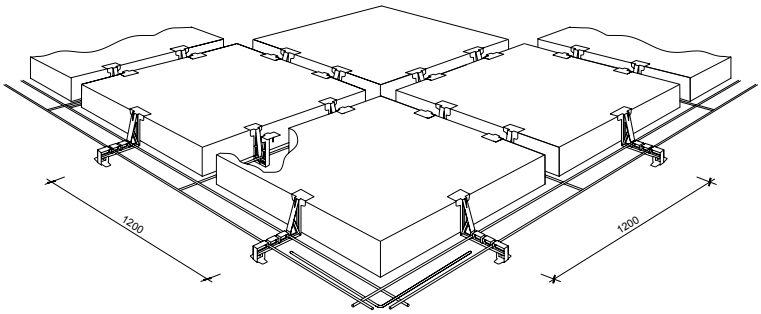

Figure 6 *Detailed Layout of Pods and Spacers (mesh and top steel omitted for clarity)*

3.9 Reinforcing Steel

Reinforcing bars shall conform to NZS 4671:2001 "Steel Reinforcing Materials". All bars shall be of deformed type (Grade 500E). All bends shall be made cold without fracture and in accordance with the bend diameters given in NZS 3109 "Concrete Construction". Welded lap joints are not permitted.

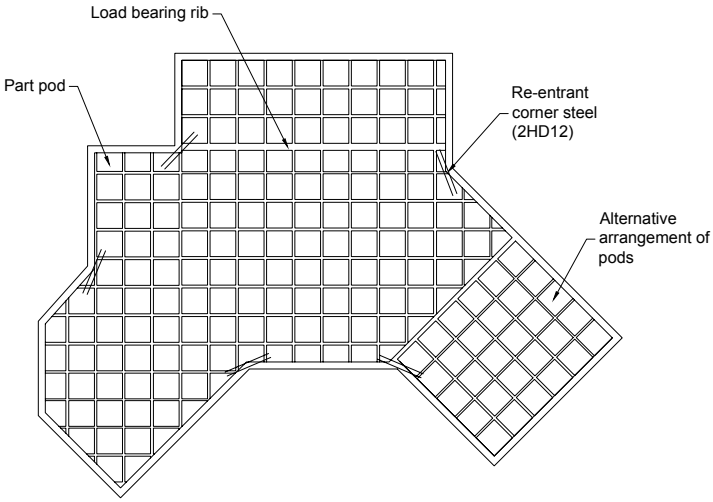

Figure 7 *Typical Pod and Rib Layout*

Reinforcing steel in the slab shall consist of Welded Reinforcing Mesh complying with AS/NZS 4671:2001 with a minimum weight of 2.27kg/m², a lower characteristic stress of 500MPa, square configuration of orthogonal bars between 150 to 300mm centres, and ductility class L or E, hereafter referred to as "665 mesh, or mesh".
Figure 10 shows the detailed layout of the spacers and the steel in the edge beam and the standard ribs.

3.9.1 Edge Beam Steel

Two edge beam reinforcing bars shall be placed in the bottom of the edge beam and supported in the correct position by the Firth spacers, as shown in Figure 10. One edge beam bar shall be tied below the mesh at the perimeter of the area covered by the polystyrene pods as shown in Figure 10.

All steel shall be lapped a minimum of 60 bar diameters (720mm for 12mm steel). Tying of the edge beam steel is only required at corners. Figure 8 shows the layout for the edge beam bottom steel bars at the corner. The inner bottom bars and the top bars shall cross each other and extend to 75mm from the outside face of the edge beam as shown. These bars shall be tied together where they cross.

3.9.2 Rib Steel

Rib reinforcing steel shall be placed in the bottom of the internal ribs and supported in the correct position by the Firth or Wilton Joubert spacers (WJ). Figure 9 shows the detail of the Firth and WJ spacers, and Figure 10 shows a detailed section identifying how the steel is located in the spacers. The 300mm spacer shall be used for the 300mm wide internal ribs. These spacers ensure that cover to DPM below the base is greater than 45mm and cover to the exterior perimeter is 75mm.

All steel shall be lapped a minimum of 60 bar diameters (720mm for 12mm steel). At the junction with the edge beam, each rib steel bar shall sit on top of the edge beam bars, and extend to the outermost bar. The 75mm cover to the edge of the beam shall still be allowed for. One HD12 bar (Grade 500E) shall be placed in each 100mm wide rib and two HD12 bars (Grade 500E) shall be placed in the bottom of each 300mm wide rib. For perimeter 300mm Ribs a HD12 bar is also required in the top at the beam.

3.9.3 Mesh Reinforcing

665 Mesh reinforcing shall be placed over the pods and supported on 40mm mesh chairs spaced at a minimum of 1200mm centres, with at least two mesh chairs placed per pod and at least one per part pod. The mesh shall be lapped 225mm minimum and tied at all laps.

3.9.4 Re-entrant Corner Steel

Two HD12 bars (Grade 500E), 1200mm long shall be placed across the corner, tied to the top of the mesh at re-entrant corners at 200mm centres, with 50mm cover from the internal corner as detailed in Figure 7 (this steel is to control cracking at this potential weak point).

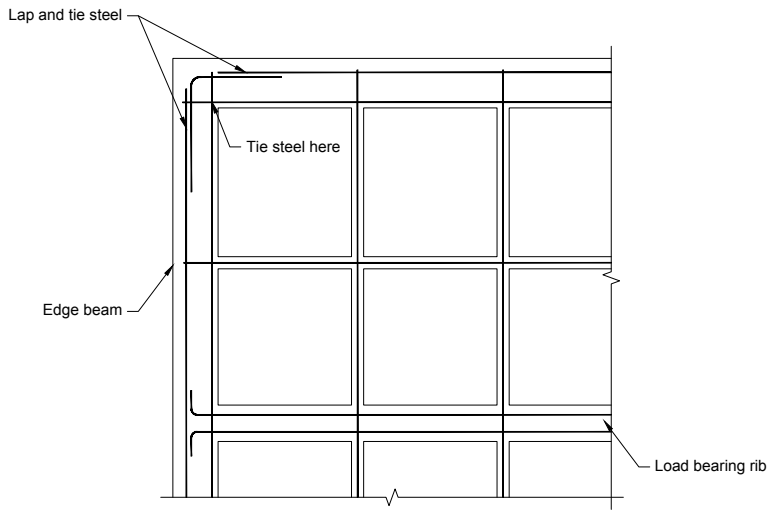

Figure 8 *Corner Steel Layout*

3.10 Concrete Installation

Concrete placing, finishing and curing shall be in accordance with NZS 3109:1997, Clause 7.

3.10.1 Placing

Only Firth Raftmix, Raftmix Pump, Raftmix25 or Raftmix Pump25 concrete shall be used in the floor. These two different concrete mixes shall be used in the following instances:

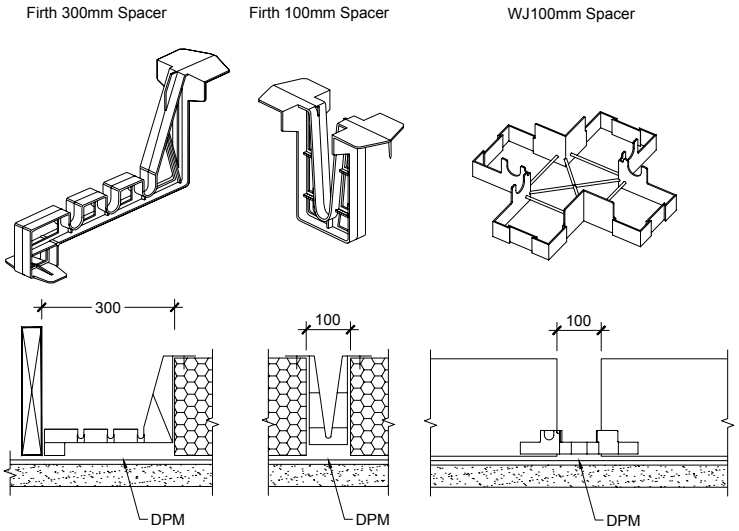

Figure 9 *Spacer Details*

- Raftmix – For placement in the floor directly from the concrete truck chute.
- Raftmix Pump – For placement in the floor by concrete pump.

Refer 2.4 of Section 1 for locations where RaftMix 25/ Raftmix 25 Pump is required.

The concrete supplied by Firth shall be poured in such a way to ensure that the pods remain in position during placing (Firth recommends that small amounts of concrete be placed on top of the pods prior to the ribs being filled). The concrete shall be compacted with the use of an immersion vibrator around all steel and into all corners of the formwork.

3.10.2 Finishing

Screeding with the aid of a level shall commence immediately after compaction. Unless specifically installed as a screeding datum, the top of the formwork shall not be assumed as level and thus shall not be used for screeding purposes. Final finishing with a trowel shall take place after all the bleed water has

evaporated. The edge of the slab and rebates shall be tooled to prevent chipping of the top of the slab.

Early age care of the slab shall be in accordance with good trade practice appropriate for the weather conditions. The surface shall be a blemish free surface to class U3 finish (refer NZS 3114:1987 "Specification for Concrete Finishes").

3.10.3 Curing

Proper curing of the concrete must take place immediately after finishing the concrete. One of the following methods of curing is recommended:

- Ponding or continuous sprinkling of water.
- Placing a wet covering or plastic membrane over the slab.
- The use of liquid membrane curing compounds.

When warm sunny days are followed by cool nights, the change in temperature can cause cracking. Immediate and continuous wet curing to reduce the maximum temperature and/or raise the minimum temperature can reduce the risk of this type of cracking.

3.11 Shrinkage Control Joints

Shrinkage control joints shall be saw cut after hardening. The saw cut shall be cut to a depth of 25mm and shall be cut no later than 24 hours in summer, or 48 hours in winter. The shrinkage control joints shall be positioned to coincide with major changes in floor plan. Where the concrete is to be exposed or brittle covering placed over, the maximum intermediate bay sizes shall be limited to 6m. Bay dimensions formed by shrinkage control joints shall be limited to a maximum ratio of length:width of 2:1.

Shrinkage control joint shall be placed over 100mm wide internal ribs wherever possible. Where a shrinkage control joint runs along the line of a 300mm wide load bearing rib then the joint shall be located directly above one edge of the 300mm rib. Supplementary reinforcing bars shall not be placed across any shrinkage control joints.

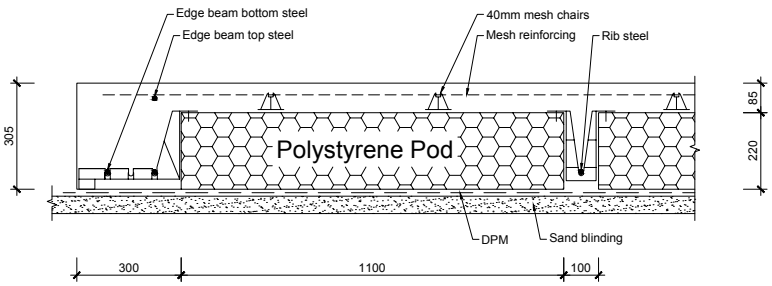

Figure 10 *Detailed Section*

3.12 Removal of Formwork

The formwork shall not be removed prior to 12 hours after the slab has been finished. No installation loads are to be placed on the system before adequate curing has taken place.

3.13 Masonry Veneer

Where the building is to be clad with masonry veneer, the rebate in the edge beam shall be waterproofed with a bituminous sealer due to the possibility of ponding of water. Firth recommends a Flintcote® or equivalent coating on both the vertical and horizontal faces of the rebate.

3.14 Landscaping/Paving

Landscaping and/or paving adjacent to the slab shall be kept as a minimum the specified distance below finished floor level as required by NZS 3604:2011. The landscaping shall allow for large trees to be kept sufficiently away from the edge of the slab. This is to prevent the tree roots from disturbing the soil moisture conditions under the slab. As a guide, trees should be as far away from the edge of the slab as they are tall when fully grown.

3.15 Ongoing Maintenance

The building owner shall ensure that the ground surrounding the system be maintained so that the integrity of the system is not jeopardised. In other words, at no time shall the ground immediately adjacent to the system be allowed to settle away to expose the underside of the slab.

This can also be ensured by maintaining the landscaping or providing a paved surface or similar around the edge of the building.

4 SHEAR KEYS

Shear keys, if required, shall be provided to conform to the requirements of Section 1 of this Manual. Holes for the shear keys shall be drilled at least 1000mm deep. Into the bottom of each hole a RibRaft Shear Key Support shall be placed. Every precaution shall be taken to ensure that the shear key support is laid level and at the base of the hole. The minimum depth of concrete placed on the support shall be 900mm. Refer to Figure 11 for construction details.

The connection steel (2HD12 Grade 500E) shall be secured in place and held during pouring to ensure

the bars are correctly located. The concrete for the shear keys shall be placed separately to the rest of the floor and shall be finished level to the top of the sand blinding layer. The top surface of the shear key shall be finished rough to ensure a good join to the Raftmix concrete in the system and the DPM shall be neatly cut around the shear keys.

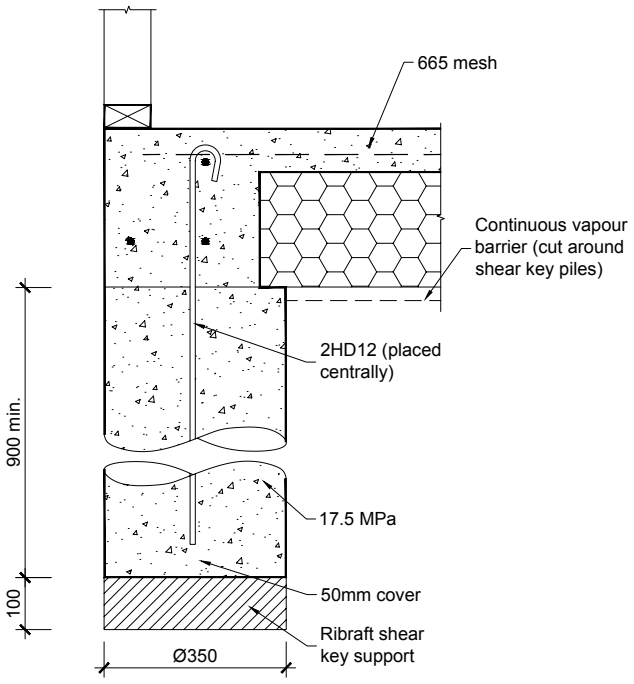

Figure 11 *Shear Pile Construction Detail*

FIRTH RIBRAFT FLOOR SYSTEM

SECTION 3: VERIFICATION

1 DESIGN

Verification that the design complies with the structural limitation outlined in this Manual is the responsibility of the designer, and shall be confirmed by the Building Control Authority issuing the Building Consent. Solutions outside the limitations outlined in this Manual will require specific engineering design.

2 CONSTRUCTION

The RibRaft foundation system has been designed to accommodate structures complying with the non specific design standards NZS3604 or NZS4229. With these types of structures the Building Control Authority specifies the inspections required and often conducts these. A similar construction verification process shall be applied to the RibRaft system.

To assist inspection the following checklist has been prepared for structures complying with the limitation:

Pre-pour Inspection Check list

	Confirmed
Good Ground confirmed as per NZS3604, clause 3.1.3.	
Vegetation, topsoil, organic or deleterious material removed.	
Proximity to slope-ground surface is always above dash line shown in figure 1.	
Shear piles (where required) in place and reinforcement protruding.	
Formation area extends at least 1m beyond building footprint.	
No steps in the formation.	

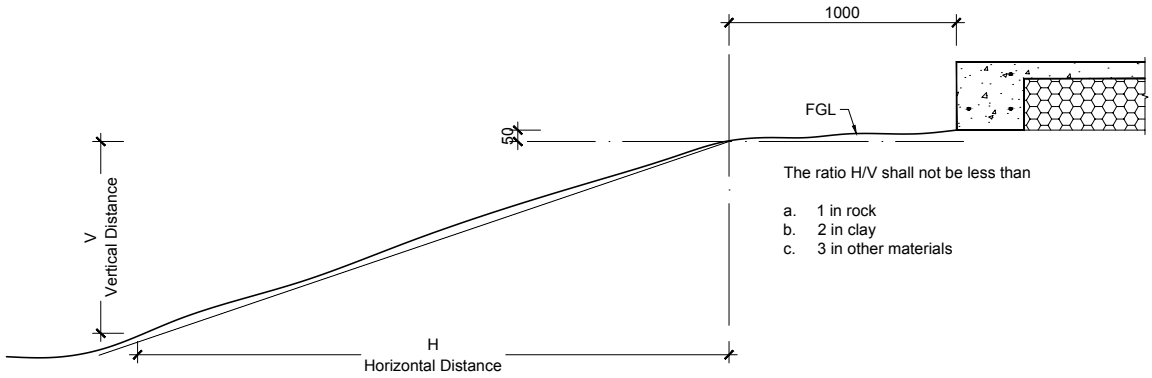

Figure 1 *Relationship of RibRaft to Sloping Ground Surface*

Pre-layout Inspection Check list

		Confirmed
Damp proof membrane in place.		
Perimeter foundation	Width 300mm [1].	
	Reinforcement 2 x HD12 bottom, 1 x HD12 top.	
	Firth supplied spacer used at 1.2m maximum centres.	
Internal Ribs	Width 100mm.	
	Reinforcement 1 x HD12.	
	Firth supplied spacer, max spacing of one per pod or part pod.	
Load Bearing ribs	Width 300mm.	
	Reinforcement 2 x HD12 bottom.	
	Firth supplied spacer, max spacing of one per pod or part pod.	
Pods	Firth supplied RibRaft pod.	
Mesh	40mm chairs, 1.2m max centres, min two per pod or one per part pod.	
	Mesh in place and 665 or equivalent area.	
	Mesh laps minimum of 225mm.	
Reinforcement	2 x HD12 bars 1.2m long provided at re-entrant corners.	
	Laps for 12mm reinforcement minimum of 720mm.	
Concrete	Cover to pods minimum of 85mm or 110mm if infloor heating used.	
	Firth Raftmix ordered.	
Service penetrations	No reinforcement (with exception of mesh) cut to allow passage of service pipes. Refer clause 6.3 of Section 1 for exceptions.	
	Diameter of opening for services 50mm greater that service pipe. Refer clause 6.3 of Section 1 for exceptions.	
	Diameter/size of penetrations as per Table 7, Section 1 of this manual.	

(1) At locations of service penetrations the width of the perimeter foundation maybe locally increased. Refer figure 12 section 1 for details.

SUSTAINABILITY: THE FIRTH CONCRETE & CONCRETE MASONRY SUSTAINABILITY LIFECYCLE

- ✔ Environmentally compliant manufacturing plants
- ✔ Surplus water and some aggregates recycled
- ✔ Low transport impacts
- ✔ Leftover concrete returned from construction sites
- ✔ Passive solar heated thermal mass makes completed buildings more energy-efficient
- ✔ Most wash water returned from construction sites
- ✔ Highly durable, low maintenance buildings and no rot
- ✔ High degree of noise control
- ✔ Inherent fire resistance
- ✔ Overall longer effective building life
- ✔ Demolished concrete can be recycled as hard fill or aggregate

For more on Firth's contribution to building a sustainable tomorrow today, visit www.firth.co.nz or call us on 0800 800 576 for our free brochure.

© Copyright Firth 2012 - All information within this document is copyright Firth 2012. Please contact Firth for prior consent should you wish to reproduce or utilise any of this information.

Jan 2012 Chalis FIR20960

Firth

Available in

PRODUCTSPEC

www.productspec.net

0800 800 576
www.firth.co.nz

Available in

masterspec

www.masterspec.co.nz

CERTIFICATE OF CONFORMITY

This is to certify that

RibRaft® Floor System

Product Description

The RibRaft® Floor System comprises of polystyrene pods, steel reinforcing rods, plastic spacers and Firth RaftMix concrete.

Product Purpose or Use

The RibRaft® Floor System is a method of concrete floor construction, offering an insulated floor with a quick, practical and efficient construction method.

Certificate Holder

Fletcher Concrete and Infrastructure Ltd
T/A Firth Industries
NZBN: 9429037777548
585 Great South Road
Penrose Auckland NZ 1061
Ph: 0800 800 576
W: www.firth.co.nz

Certification Body

CertMark International Pty Ltd
T/A CertMark New Zealand
ABN: 80 111 217 568
JAS-ANZ Accreditation No. Z4450210AK
PO Box 321 Tuakau 2121
www.CertMark.org

Complies with the Building Code of New Zealand:

1. NZBC Clause B1 Structure: B1.3.1, B1.3.2 & B1.3.3.
2. NZBC Clause B2 Durability: B2.3.1 (a).
3. NZBC Clause E2 External Moisture: E2.3.3.
4. NZBC Clause F2 Hazardous Building Materials: F2.3.1.
5. NZBC Clause H1 Energy Efficiency: H1.3.1. Refer to limitation c.

Subject to the following Conditions & Limitations:

a. Must be installed in accordance with the RibRaft® Technical Manual (CBI3100/3111/3112/4711) (Jan 12).
b. Specified products must be supplied by Firth Industries or an approved agency.
c. The energy efficiency rating of the RibRaft® Floor System relates only to NZS 4214:2006 - Methods of determining the total thermal resistance of parts of buildings and is applicable only to the thermal efficiency of the floor system.
d. This certification relates only the clauses of the NZBC as contained herein. Consequently the following clauses are excluded from the certification: C-E1-E3 these clauses are outside the scope of this Certificate. The need for compliance with the requirements of excluded clause in the use of the subject product are to be determined by the regulatory authority (building certifier or building surveyor).
e. This certification relates only to the product that is described above, and has to be read, considered and used as a whole document — it may be considered misleading and will be incomplete to be selective.
f. For futher information contact the certificate holder.

Originally issued under CMNZ-2012-0522
Initially Issued 22/05/2012

John Thorpe CertMark International Pty Ltd	22/05/2014 **Date of Issue**	CMA-CM40015 (Rev3) **Certificate Number** **Revised May 2015**

- This certificate is issued by an independent certification body accredited by the product certification accreditation body appointed by the Chief Executive of the Ministry of Business, Innovation & Employment (MBIE) under the Building Act 2004. MBIE does not in any way warrant, guarantee, or represent that the building method or product the subject of this certificate conforms to the New Zealand Building Code, nor accept any liability arising out of the use of the building method or product. MBIE disclaims, to the extent permitted by law, all liability (including negligence) for claims of losses, expenses, damages, and costs arising as a result of the use of the building method(s) or product(s) referred to in this certificate
- It is advised to check that this Certificate of Conformity is currently valid and not withdrawn, suspended or superseded by a later issue by referring to the MBIE website, www.mbie.govt.nz
- This certificate may only be reproduced in its entirety.

Garador™
Your Garage Door Specialists

Garage Framing Instructions

Planning & Installation

Roll-A-Door™

Note: Reduction of clear drive through opening height when door is fully open. With ongoing product developments, the manufacturers retain the right to change products and specifications without prior notification. If a specification is critical to the end use, please contact the manufacturer first.

Series 1

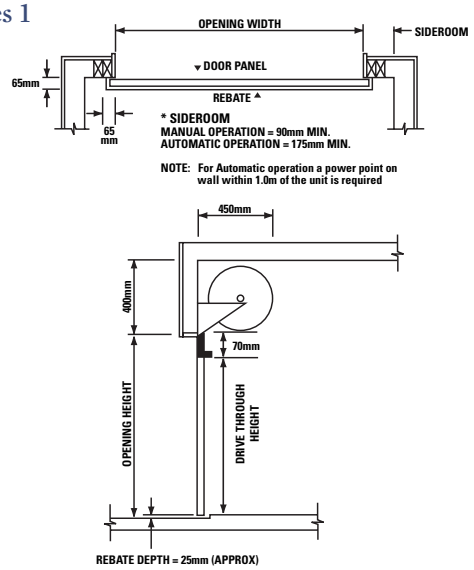

Series 3

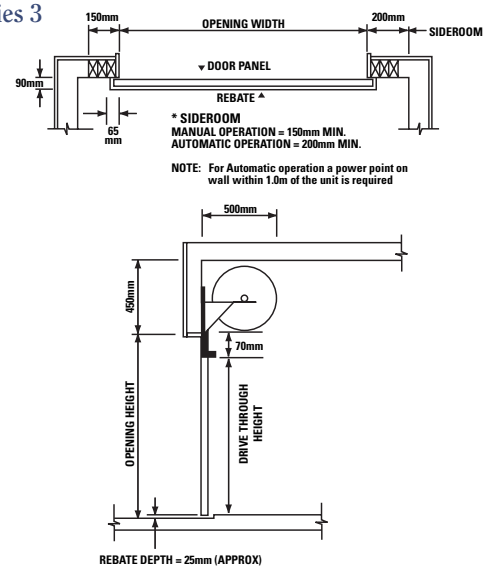

Tilt-A-Door™

With ongoing product developments, the manufacturers retain the right to change products and specifications without prior notification. If a specification is critical to the end use, please contact the manufacturer first.

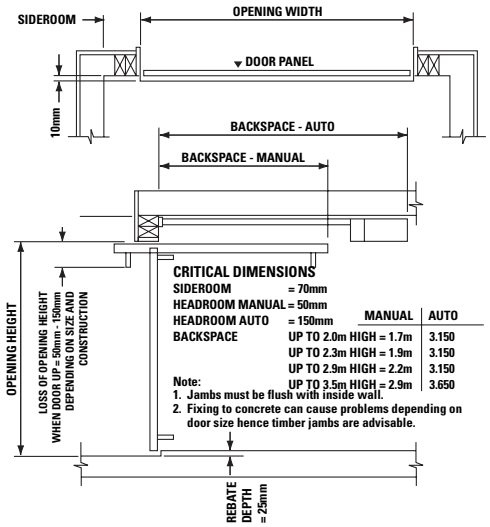

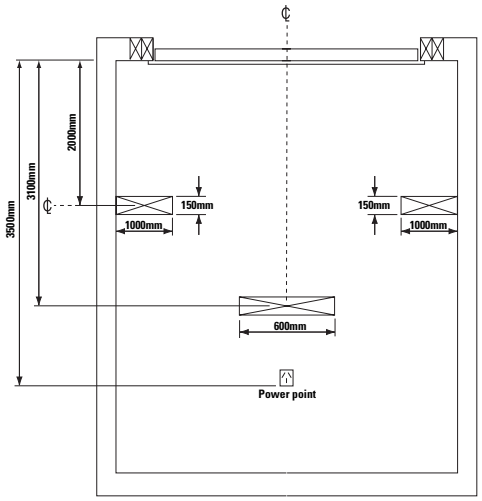

Sectional Panelift™

Note: With ongoing product developments, the manufacturers retain the right to change products and specifications without prior notification. If a specification is critical to the end use, please contact the manufacturer first.

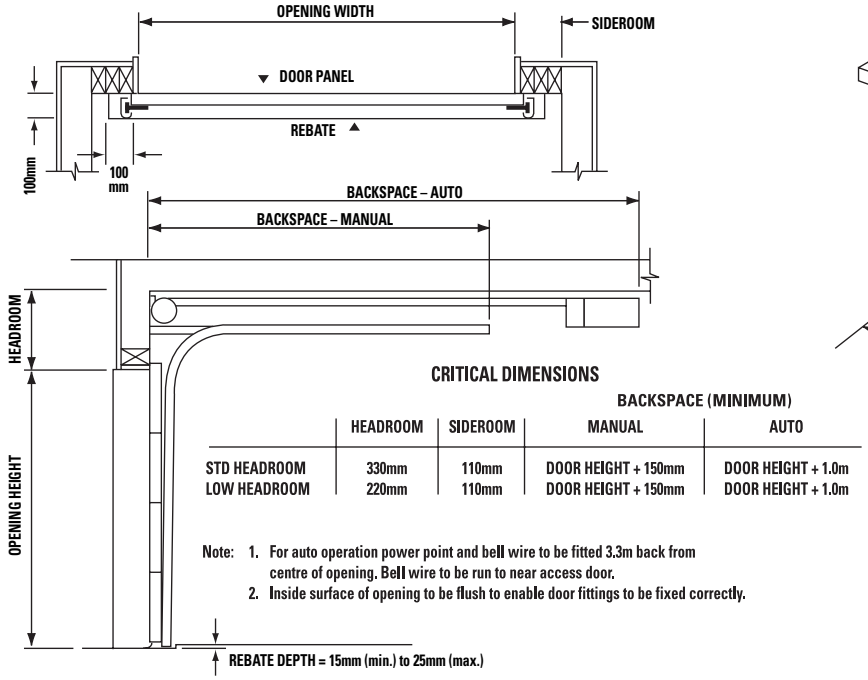

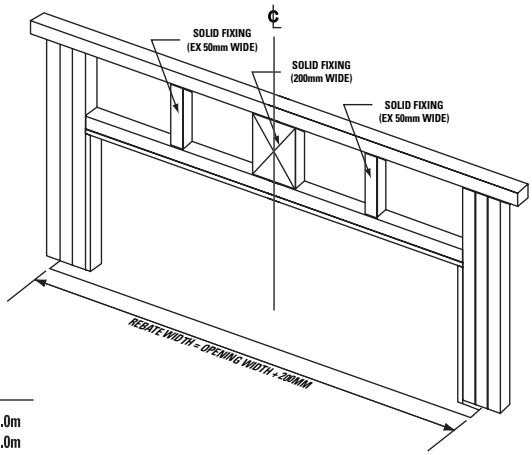

CRITICAL DIMENSIONS

	HEADROOM	SIDEROOM	BACKSPACE (MINIMUM) MANUAL	BACKSPACE (MINIMUM) AUTO
STD HEADROOM	330mm	110mm	DOOR HEIGHT + 150mm	DOOR HEIGHT + 1.0m
LOW HEADROOM	220mm	110mm	DOOR HEIGHT + 150mm	DOOR HEIGHT + 1.0m

Note:
1. For auto operation power point and bell wire to be fitted 3.3m back from centre of opening. Bell wire to be run to near access door.
2. Inside surface of opening to be flush to enable door fittings to be fixed correctly.

NOGGING DETAIL FOR SECTIONAL UP TO 2.3M HIGH (TRACK AND MOTOR FIXINGS)

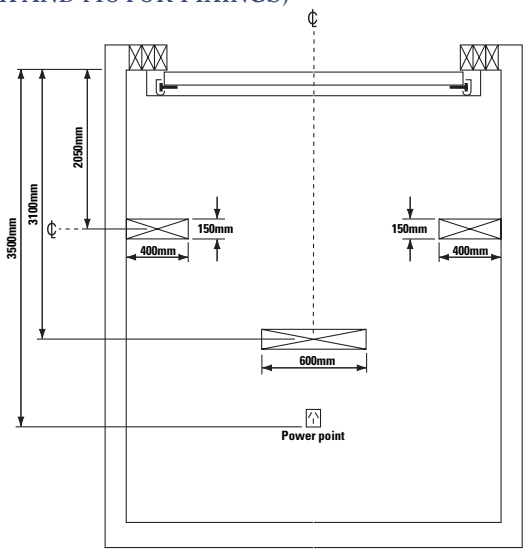

Note: The details shown are for 2.3m Maximum height Sectional Door with Standard 330mm Headroom. Also for Intermediate Headroom of 220mm with springing to front.

NOGGING DETAIL FOR SECTIONAL 2.35 – 3.35M HIGH (TRACK AND MOTOR FIXINGS)

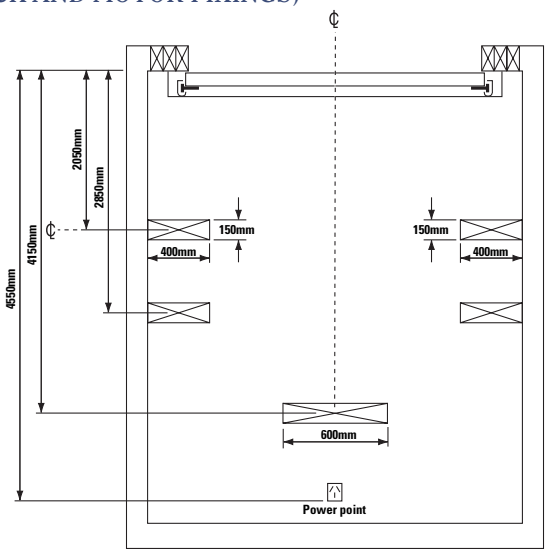

Note: The details shown are for 3.35m Maximum height Sectional Door with Standard 330mm Headroom. Also for Intermediate Headroom of 220mm with springing to front. Measurements for motor with 2.3m C-Rail and 1m extension.

Garador™
Your Garage Door Specialists

Notes / Information
a) The company reserves the right to make changes or improvements to the products or accessories without further notice and without incurring any obligation to make similar changes or improvements to goods previously ordered. Specifications subject to change without notice.
b) Prefixed Trademarks are trademarks of B&D Doors (NZ) Ltd.
c) Details correct at date of publication.

Garador is a brand of B&D doors (NZ) Ltd, an Alesco company. © Copyright 2008.

Your Garador™ Dealer:

For more information on this product or others in our range, phone 0800 GARADOR or visit www.garador.co.nz

Wood Fire Installation & Owner's Operation Manual

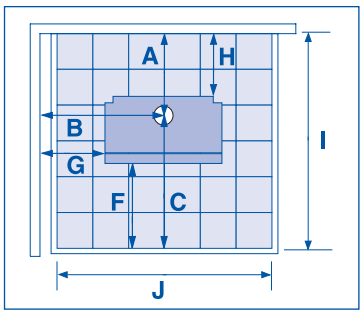

metrofires

Ambience Series

- Ambie One
- Ambie Plus

Installation important information 2
Assembling your Metro.....3
Clearances and specifications.....4
Wetback and flue installation 5
Operation important information 6
Where to install a Metro in your home....7
Optional wetbacks 7
Getting to know your Metro 7
Operating your Metro.....8
Cleaning and maintenance 8-9
Troubleshooting 10
Metro warranty.....11
Pioneer wood fire accessories 12

NZHHA New Zealand Home Heating Association Inc.

NEW ZEALAND MADE

PIONEER MANUFACTURING LIMITED

PO Box 11, Inglewood 4347, New Zealand
Ph (06) 756 6520 • Fax (06) 756 6540
info@metrofires.co.nz • www.metrofires.co.nz

M1120 10/14 © PIONEER MANUFACTURING LTD

⚠ WARNING! Important Information

- **WE HIGHLY RECOMMEND YOU READ THIS ENTIRE MANUAL AS INCORRECT OPERATION, MISUSE AND/OR LACK OF MAINTENANCE WILL VOID THE WARRANTY**
- **The appliance and flue-system shall be installed in accordance with AS/NZS2918 and the appropriate requirements of the relevant building code or codes**
- **Any modification of the appliance that has not been approved in writing by the testing authority is considered to be in breach of the approval granted for compliance with AS/NZS4013 and will void the warranty**
- **The appliance must be installed correctly. We recommend a competent and suitably qualified NZHHA installer**

⚠ CAUTION! Important Information

- **Mixing of appliance or flue-system components from different sources or modifying the dimensional specification or components may result in hazardous conditions. Where such action is considered, the manufacturer should be consulted in the first instance**
- **Do not install a Metro fire if there is any sign of visible damage to the product**
- **This appliance must be regularly maintained.**
- **Use authorised Metro replacement parts only. The use of unauthorised parts may void the warranty**
- **This manual must be left with the home owner**

This Metro wood fire has been tested to and complies with AS/NZS2918:2001 when installed in accordance with this manual. Please ensure you are fully conversant with this relevant standard and the contents of this manual. Correct installation is critical to the safe operation and performance of this wood fire.

Please take particular note of the following:

- It is recommended that Metro's be installed with a Metro ECO flue system which has been developed to enhance the performance of Metro wood fires. Any alternative flue system must have a minimum flue pipe length of 4.2 metres of 150mm diameter flue pipe & have been tested to AS/NZS2918:2001.
- The 150mm active flue pipe must be fully encased from the ceiling to the underside of the flashing cone at the top of the flue system, (i.e. there must not be any 150mm flue pipe exposed).
- All flue pipe joints must be sealed and riveted. The bottom of the flue pipe in particular MUST be fully sealed into the flue outlet of the Metro wood fire.
- In New Zealand, the Metro must be bolted through the floor protector into the floor to comply with the seismic restraint provisions of AS/NZS2918:2001
- All Metro's are extremely heavy, varying in weight from 85kgs up to 150kgs. During the installation process do not lift the appliance by yourself, and take care not to damage the panel coating.
- Please take care when lifting the Metro into place onto the hearth or floor protector as point loading may break tiles and/or scratch surfaces.

Parts guide for your Metro – Baffle, promet and wetback

Listed below are the parts and product codes for your Metro wood fire. The promet/baffle should be regularly checked and must always be in place during the operation of your fire.

Note: Cracks in the promet are not uncommon and have no adverse effect on the operation of your Metro. These cracks are the result of intense heat coupled with expansion and contraction and is normal wear & tear.

Your Metro wood fire must be regularly maintained and we recommended it is also serviced annually. If a wood fire is not regularly maintained and serviced, the life span will be reduced. If your Metro wood fire has been neglected, by not being regularly maintained and serviced, with authorised Metro parts replaced as required, your warranty may be declined.

Clean air models	Type of promet required / Type of steel baffle(s) required			Water heating options
• **Ambie One**		Ambie One Set 500-1540 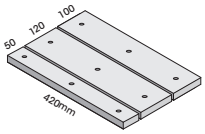 	Ambie One Complete 500-2030 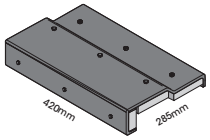 	No wetback if this fire is installed in a clean air zone. The LTD wetback can be fitted on properties 2Ha+ LTD 3kW Wetback 450-0100 or LTD 4kW Wetback 450-0150
• **Ambie Plus**	Ambie Plus Set 500-1545 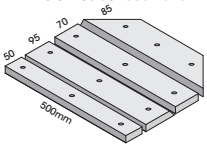 	Ambie Plus Front 500-2035 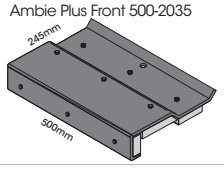 	ECO Mega Smart/Ambie Plus Rear 500-2500 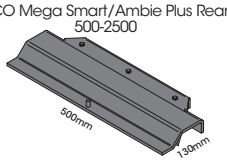 	ECO Wetback 450-0450

Assembling your Metro wood fire

Metro Ambience Series

To minimise freight damage, the pedestal base has been packaged inside the firebox and the pedestal mount plate has been packaged up against the door glass for added door glass protection during transit.

Please note: you should only assemble this wood fire if you are suitably experienced in wood fire assembly and installation.

To safely assemble your Metro, please proceed as follows: -

- Safely remove straps by cutting straps with scissors.
- Lift off carton, turn upside down (use to hold all discarded packaging).
- Remove the pedestal mount plate from the front of the wood fire.
- Lift off the top grill and place somewhere safe. Be careful not to chip the enamel coating.
- Open the door 90 degrees and lift the door off the hinge and place somewhere safe. Be careful not to chip the enamel coating.
- Remove pedestal base (use baffle lifters with Ambie Plus, instructions taped to front of inside firebox door opening)
- Remove the bolt bag and side brick pack, and baffle lifters if assembling the Ambie Plus.
- Fit the pedestal base to the pedestal mount using 4x M6 x 10mm socket screws with 4x M6 flat washers. Prior to doing this you can pre-mark the floor protector with the 2 fixing points, by placing the pedestal mount plate on the floor protector, using the (X) as detailed on diagram 1 as the flue centre point.
- Once the pedestal base is screwed to the pedestal mount plate, remove the 2 tek screws at the base of the inside of the firebox that are fixing the wood fire to the pallet.
- It is recommended that 2 people work together with this step. Grab the underneath top of the firebox door opening with one hand, holding the flue spigot with the other, slowly lift the front of the wood fire all the way back and rest the wood fire on it's rear heat shield on the floor. Remove the packaging pallet.
- Fit the pedestal to the wood fire as detailed in diagram 1, by using the 4x M6 set screws and M6 flat washers, secure the pedestal to the wood fire.
- It is recommended that 2 people work together with this step. Grab the flue spigot with one hand and the other hand underneath the top of the firebox door opening, lift upwards standing the wood fire onto it's pedestal.
- Re-fit the door and top grill.
- Open the door fully and fit the side bricks to each side of the fire box. Location lugs are fitted to the base and rear of the firebox to retain the side bricks in position. Refer to Diagram 2.

Diagram 1

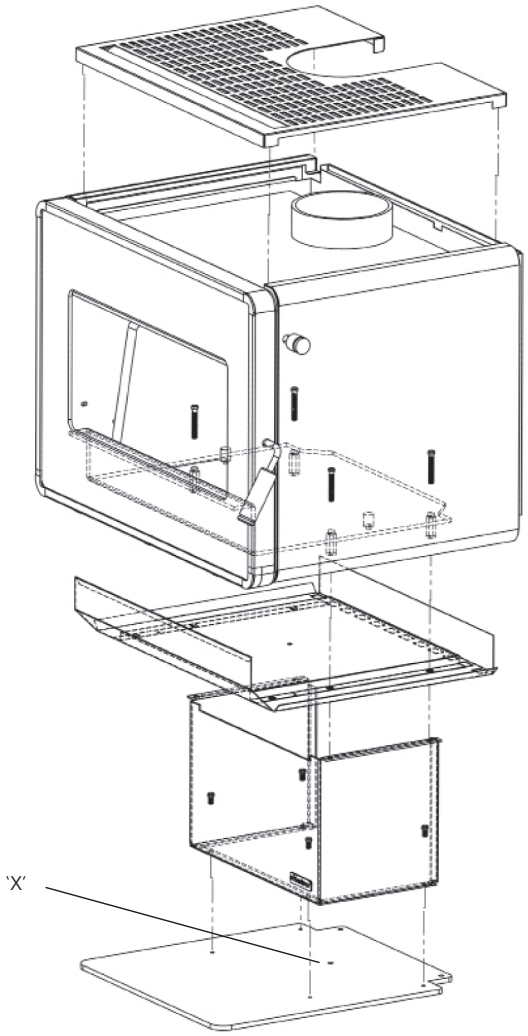

Diagram 2

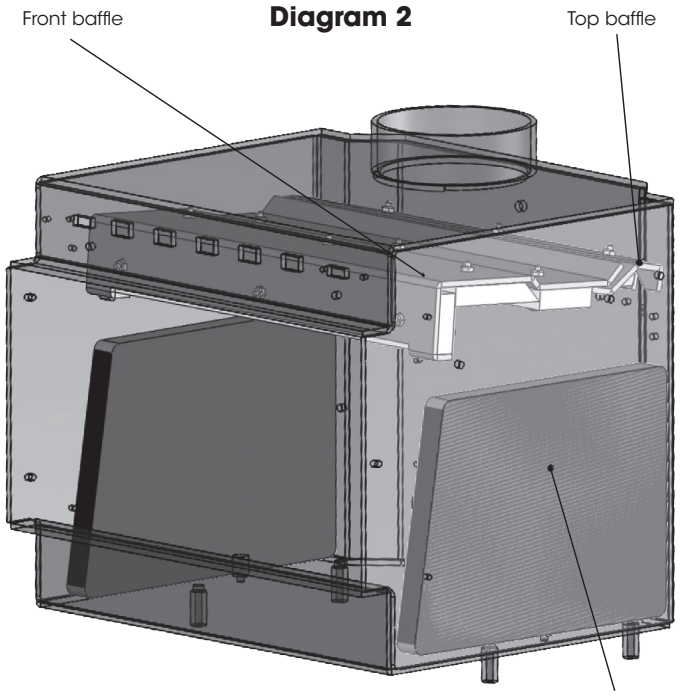

• Ambie One = 1 Piece Top Baffle
• Ambie Plus = 2 Piece Top Baffle

Floor protector size, construction and fitting

Pioneer manufacture an extensive range of what Pioneer term "Ash Floor Protectors" which comply with the minimum floor protector requirement of AS/NZS2918:2001, and can be installed with any freestanding Metro wood fire.

Metro freestanding wood fires do not require an insulated floor protector as they comply with the minimum floor protector requirements of AS/NZS2918:2001. These minimum floor protector requirements are;

- They must be of adequate size to give appropriate wall, rear and front clearances/projections as detailed in the clearance chart illustrated below. Note;
- The floor protector must extend 100mm horizontally to the rear and 200mm horizontally to each side directly below the door opening, and 300mm forward of the door opening.
- The upper surface of the floor protector must be made of non combustible material.
- A suitable floor protector for a Metro freestanding wood fire is therefore any non-combustible material which could include;
- Ceramic tiles with grouted joints fixed directly to timber flooring.
- A sheet of toughened glass, panel steel etc. laid directly onto a wooden or other combustible floor.

Note: If being installed onto a concrete or non-combustible floor a floor protector is not required.

Clearance chart

Measurements listed below are the minimum required, stated in millimetres. Measurements are taken from the following reference points as illustrated:

- From the nearest combustible wall or surface (A, B, D, E, G, H)
- From the Metro's flue centre (A, B, C, D)
- From the outermost point of the Metro's cabinet construction (E, F, G, H)
- To the edge of the ash floor protectors non-combustible surface (C, F, I, J, K, L, M)

Specifications were correct at the time of printing, but may alter and those detailed within should be used only as a guide. If in doubt, please consult your Metro retailer.

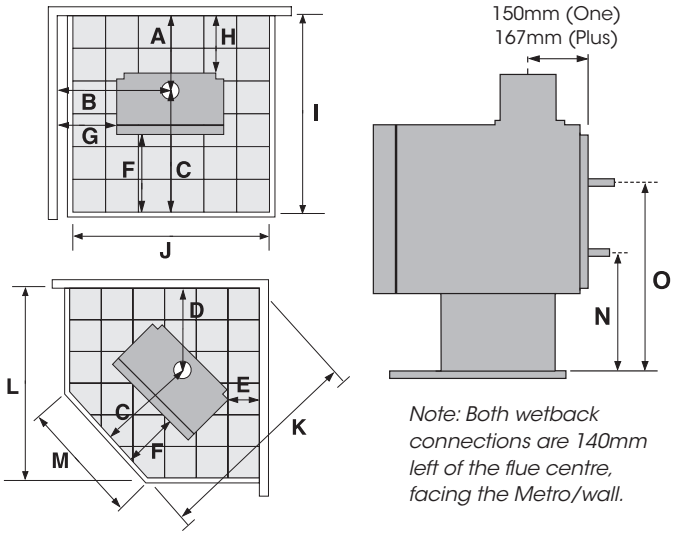

Note: Both wetback connections are 140mm left of the flue centre, facing the Metro/wall.

Metro clearances and specifications (Minimum clearances shown are in mm, with a Pioneer double flue shield fitted)

	Minimum installation clearances with a Pioneer double flueshield fitted (mm)													Wetback		Dimensions		
Clean Air Models	**A**	**B**	**C**	**D**	**E**	**F**	**G**	**H**	**I**	**J**	**K**	**L**	**M**	**N**	**O**	**Width**	**Depth**	**Height**
Ambie One	250	538	589	391	100	275	250	100	839	825	1142	960	427	350	540	577	464	717
Ambie Plus	267	685	658	462	125	275	350	100	925	905	1317	1110	506	360	550	671	550	761

Wetbacks

⚠ WARNING! Important Information

- **Do not connect to an unvented hot water system.**
- **Install in accordance with AS 3500.4.1 or NZS 4603 and the appropriate requirements of the relevant building code or codes.**

If the home is in a classified "clean air zone", and dependent on requirements/restrictions which may be imposed by your local council, you may or may not be able to install a water heating device. If in doubt consult your local Metro retailer. Only Pioneer's cast jacket wetback system should be fitted to a Metro; alternative wetbacks will void the Metro's emission approvals and may seriously affect the performance of the appliance and void the owner's warranty.

Note; Wetback systems are not suitable for use in locations where the water supply has lime content, lime build up inside the coil will eventually block the coil causing the wetback to fail.

The wetback is fitted to the inside rear of the firebox, unless as detailed in the points below. The connection pipe heights are illustrated and detailed on the previous page 4. Please note:

- Wetback connections for the Ambience models are 140mm left of the flue centre, facing the Metro/wall; the return pipe connection is directly above the inlet connection.
- Reduced height pedestals are available for certain models to reduce wetback connection heights.
- It is recommended the return pipe has a minimum rise of 1 in 12; performance will reduce as the distance to the storage cylinder increases.

To fit the wetback proceed as follows:

1. Remove the rear panel of the Metro by removing the four pozi drive screws. Remove the two pre-punched knockouts from this panel.
2. Two further knockouts will be visible on the inner rear heatshield; remove these also. Once these are removed 6mm nuts will be visible through the knockout holes.
3. Open the Metro's door and locate two bolts securing the pressed washers which are visible on the left hand side of the firebox for both inlet and outlet connection points.
4. A further three bolt heads will also be visible on the inside rear wall of the firebox; these are threaded into the 6mm thick firebox. Remove all three.
5. Using the tube of sealant supplied with the wetback, apply a liberal bead of sealant around both the two connection pipes and also the outer circumference of the wetback which will face and press against the inside rear wall of the firebox. This will completely seal the wetback to the inside rear wall of the fire on installation.
6. Fit the wetback into the firebox and carefully pass the connection pipes through the holes in the rear of the firebox. Securely attach the wetback using the three bolts previously removed from the rear face of the firebox, fitting them through the slots provided in the wetback's jacket.
7. The wetback is now ready for connection to the storage cylinder by a registered plumber.

Flue installation

It is recommended that all Metro freestanding wood fires be installed with the energy efficient Metro ECO flue system which comes complete with a detailed installation manual. This installation manual must be presented with your application to gain consent with your local council.

A copy of the installation manual can be downloaded from www.metrofires.co.nz, or a copy can be obtained from your Metro retailer. Any alternative flue system must comply with and be installed as detailed in AS/NZS2918:2001, and a copy of the installation manual must also be presented with your application to gain consent with your local council.

All Metro's require a 150mm diameter flue. Please note:

- All joints in the flue pipe must be sealed with Pioneer fire cement (or similar) and riveted.
- The base of the flue pipe must be sealed into the outlet of the Metro's flue outlet. This is critical for optimum operation.
- Refer "Important Information" on page 2.
- The flue systems 150mm diameter flue pipe must terminate a minimum of 4.6 metres above the top surface of the floor protector.

Pioneer Double Flue Shield

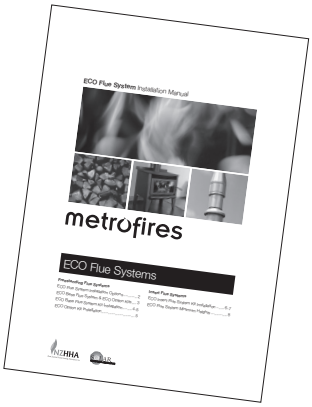

All Metro's have been tested with a Pioneer double flue mounted shield. For the Metro to be installed with minimal clearances as the clearance chart states, only the Pioneer double mounted flue shield can be used. All other flue shields will invalidate the installation.

The Metro can be installed without a flue shield, if this is the case it needs to be installed as AS/NZS2918:2001 stipulates.

⚠ WARNING! Important Information

- **WE HIGHLY RECOMMEND YOU READ THIS ENTIRE MANUAL AS INCORRECT OPERATION, MISUSE AND/OR LACK OF MAINTENANCE WILL VOID THE WARRANTY**
- **Any modification of the appliance that has not been approved in writing by the testing authority is considered as breaching AS/NZS 4013 and will void the warranty**
- **Do not use flammable liquids or aerosols in the vicinity of this appliance when it is operating**
- **Never operate your Metro with the top grill removed**
- **Do not dry clothes on or near this appliance**
- **Do not use flammable liquids or aerosols to start or rekindle the fire OR store fuel within the Metro's specified installation clearances**
- **Never operate your Metro with the door ajar, except on initial start up**
- **Open the air control fully before opening the Metro's door**

⚠ CAUTION! Important Information

- **This appliance should be maintained & operated at all times in accordance with this instruction manual**
- **This appliance should not be operated with cracked door glass, over worn, faulty or missing door seals**
- **Do not use driftwood, treated or unseasoned (wet) fuel, the use of most types of preservative treated wood as fuel can be hazardous and will damage your appliance**
- **Burning unseasoned (wet) fuel or incorrect operation on extended low burn cycles will cause excessive creosote to form. Creosote is very corrosive and excessive buildups will result in the flue pipe, flue spigot and upper burn chamber failing. Failure of the applicance and/ or flue system due to creosote damage is not covered under warranty. The formation of such is not an appliance issue it is a fuel and operational issue**
- **This appliance must be regularly maintained and replacement parts must be authorised Metro parts only**
- **Do not empty ash into a combustible container**

Congratulations on the purchase of your Metro wood fire

This low-emission, slow combustion appliance is designed to give you many years of warmth and service, subject to the following key factors. These key factors, if not adhered to are the major causes of unsafe installation, poor performance and flue blockages and potential product failure.

1. Your Metro wood fire must be installed correctly. Metro recommend a competent and suitably qualified NZHHA installer.
2. The only fuel to be used in this appliance shall be wood that meets the following criteria.
   - Less than 25% moisture content
   - Has not been treated with preservatives or impregnated with chemicals or glue,
   - Is not chipboard, particle board, or laminated board,
   - Is not painted, stained or oiled
   - Is not driftwood or other salt impregnated wood
3. The appliance shall be operated at all times in accordance with the "Installation and Operating Instructions" supplied with each appliance.
4. It is preferable that Metro wood fires should be installed with a Metro ECO Flue System.
5. Coal must not be used as a fuel.

Please also note the following important points:

- In New Zealand a building consent is required from your local building authority. The homeowner is responsible for obtaining this consent.
- As correct installation is critical to the performance and safe operation of your Metro, it is recommended your Metro be installed by a NZHHA registered installer or a person suitably qualified in the installation of wood fires. Your Metro retailer will be able to arrange professional installation for you.
- During the very first fire your Metro will give off an odour and fumes as the firebox paint cures. Do not be alarmed; open all windows and externally opening doors in that room and close any internally opening doors. This curing process will last for approximately one hour and is likely to happen this one time.
- Properly seasoned (dry) timber is necessary for the Metro to operate efficiently; firewood that contains a high moisture content will result in flue pipe blockages, reduce heat output and create other issues.

Note: Once split, Softwood usually takes 12 months to season - Hardwood can take up to 24 months to season - Wood must be stored in a location that enables air circulation. Unseasoned wood stored in a closed woodshed without air circulation will still be unseasoned 12 months later.

- It is critical that the fire not be operated with over worn, faulty or missing door seals. Door seals will harden over time and become over-worn (3-4 year's) this will cause air to leak into the fire, causing the appliance to 'over fire'.
- It is critical that the fire not be operated with over worn, faulty or missing bricks, baffle plate, baffle extension (white board on the baffle plate)
- It is critical that the fire not be operated with cracked, or broken door glass.

Please note, the above 3 points require regular inspection/ maintenance (every time the ash bed is cleaned out, generally 3-5 times a season) and if not maintained will void the firebox warranty. A glowing firebox or lower fluepipe is just one sign you are over firing your appliance. Please ensure you keep your proof of purchase/receipt on any parts you purchase.

- For optimum performance fuel must be loaded so the logs lay "front to rear" in preference to laying across the width of the firebox. Spaces should be left between the logs to enable oxygen to get to as much of the surface of the fuel as possible.
- A small hot fire loaded frequently is more efficient than a large fire burning on a low setting.
- Your Metro is covered by a full unconditional 12 month warranty on replacement parts, and a 10 year firebox warranty.

Where to install a Metro wood fire in your home

Wood fires are usually installed in the main living area, which is the section of the home that is usually kept the warmest, being the area in the home most frequently occupied. However, before deciding on the best location for your Metro wood fire you may wish to consider:

- Water heating. If you are intending to have a wetback it is important that the wood fire is as close as practically possible to the water storage cylinder.
- Split level homes are best heated when the wood fire is installed on the lower level, as the heated air will rise to the higher levels.
- Building construction is another consideration. Specified clearances from walls, curtains etc must be maintained and you need to ensure no structural beams or internal gutters etc are directly above your preferred site. If you have a two storey dwelling you need to consider the second storey to ensure you don't have the flue directly outside a second storey window.

Generally, you can install your Metro in your home anywhere that suits you; Pioneer offer various fan systems to transfer heat to other sections of the home that are not heated sufficiently. It is necessary if using a fan system that the Metro you have purchased has sufficient output to heat the total area you wish to heat. Your Metro retailer or installer will be able to advise if you are uncertain.

Optional wetbacks

If your home is in a classified "clean air zone", and dependent on requirements/restrictions which may be imposed by your local territorial authority (council) you may or may not be able to install a water heating device. If in doubt consult your local Metro retailer.

Water heating is another key feature of your Metro wood fire, and on offer are a number of options depending on the model you have purchased. The Ambie One cannot be fitted with a wetback in a clean air zone, but can be fitted with a wetback if installed on a 2HA+ rural property. The Ambie Plus can be fitted with the ECO wetback in a clean air zone, or either the 3kW or 4kW LTD wetback if installed on a 2HA+ rural property.

Note: Wetbacks are not suitable for use in locations where the water supply has lime content. Lime build up inside the coil will eventually block the coil causing the wetback to fail.

Other considerations are:

- Distance from your Metro to the storage cylinder will affect the amount of hot water produced.
- Your climate & the manner in which you will 'fire' your Metro will determine the amount of hot water produced.

Cost Savings

Wetbacks can enable substantial power savings, dependent on the climate in the area in which you live. If you live in a cold climate you are likely to use your Metro for many months of the year, in which case a Pioneer wetback will reduce or even eliminate your water heating costs over those months. If however you live in a warmer climate and use your Metro for only a few hours a day over the colder months, electricity savings will be considerably less.

Water Pressure

A common misconception is that you must have a low-pressure system to have a wetback; this is not true. You must have a "vented" system and high-pressure cylinders are usually not vented. However you can install an "indirect" cylinder which contains a secondary coil inside the storage cylinder, enabling you to have a wetback while retaining a high-pressure system.

Getting to know your Metro wood fire

Operating your Metro wood fire is simple and you will quickly learn how to get the best from it. First take a minute to familiarise yourself with your new Metro.

- Lift the door handle towards you until the latch releases, then slowly pull the door open.
- There is a single air control making your Metro easy to adjust. This control moves from left to right, which is "low to high".

Simply pull out to increase burn rate or push in to reduce burn rate. This is a pre-set "low" position. Your Metro must not be operated at a lower burn rate than this pre-set low allows.

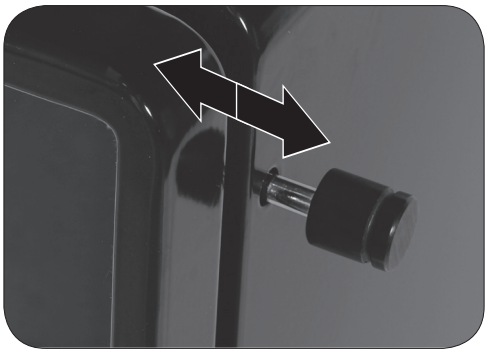

Ambience Series air control

Operating your Metro wood fire

If your Metro has only been installed within the past few days, the fire cement seal at the base of the flue will not be fully cured. To ensure the cement sets without blistering it is recommended you burn 2-3 sheets of loosely crumpled newspaper at a time, approximately once every hour over a 6-8 hour period.

During the very first fire your Metro will give off an odour and fumes as the firebox paint cures. Do not be alarmed. Open all windows and externally opening doors in that room and close any internally opening doors. This curing process will last for approximately one hour and is likely to happen this one time.

Start up

Place a quantity of loosely crumpled newspaper on the base of the firebox until it is approximately 50% full of paper, or place firelighters on the base of the firebox. Add dry kindling and move the air control knob fully to the right, being the "full open" position.

Light the paper at two or three locations across the front of the door opening and leave the door slightly ajar resting on the latch pin if necessary for a few minutes while the fire establishes. Once the kindling is burning well, open the door and add 2-3 small logs at a time until you have a well-established fire. Usually this will take approximately 30 minutes, during which time the air control should be set on "high" and the door should be closed, except for the initial few minutes and when fuel is being added.

Normal operation

Once the fire is well established, regulate the air control to achieve the desired burn rate and heat output. As you move the air control to the right, burn rate, firebox temperature and heat output will increase, if you move the control to the left they will decrease.

Please note:

- Always open the air control fully prior to opening the door, then open the door slowly.
- When loading logs, place them end-on, "front to back"; air spaces should be left between the logs to enable oxygen to get to as much of the surface of the fuel as possible.
- Every time you refuel, leave the air control on "high" for a minimum of 20-25 minutes.
- Never use the door to force wood into the firebox, as this is likely to break the glass.

Cooking

All Metro's are designed to enable cooking of soups, stews and casseroles etc, and your Metro will easily boil a flat bottom stainless steel kettle. The Radiant Series have a dedicated cooking top enabling large pots to be placed on the cook top, while all other models have a lift-off grill.

Note: Metro's supplied with a lift-off top grill have this feature to enable the grill to be removed for cleaning if you have a spill. The lift-off top grill must be left on when cooking, because if removed the wall temperatures next to the appliance may become excessive and the top of the firebox is generally too hot to cook on directly. Please note: Although very durable, Metro's in a satin stainless look are not recommended to be used to cook on.

Cleaning and maintenance for your Metro wood fire

The Ambience Series wood fires outer panels are coated with vitreous enamel.

- Vitreous enamel is extremely durable and designed to last the life of the appliance. As vitreous enamel is glass, a solid or heavy object dropped or banged against a panel could chip the enamel surface.

All model Metro's can be cleaned with a cloth when the appliance is not operating.

- This appliance must be regularly maintained and replacement parts must be authorised Metro parts only.

Door glass and glass replacement

Providing your fuel is properly seasoned, under normal operating conditions the air-wash design of the Metro's firebox will keep the door glass clear. If the glass requires cleaning you may use either a razor blade scraper or an oven cleaner.

If your door glass breaks it must be replaced with 5mm thick ceramic glass which is available from your local Metro retailer.

Refer specific glass replacement instruction below.

1. Take the door off your Metro.
2. Remove the 4 cap screws protruding through the back of the door frame.
3. Release the 6 [8 for Ambie Plus] tensioning screws by turning clockwise, these are accessible through holes in the back of the door frame. Take care not to screw these in any further than necessary which is flush with the cast hinge boss as you run the risk of the screw busting out the back and breaking the glass.
4. Unbolt and remove the bottom section of the door frame.
5. Remove the 6mm nut securing the latch to the spindle, gently tap the latch plate until it comes loose on the spindle, remove the plate and extract the door handle spindle from the frame.
6. You can now extract the cast backing plate from the door frame, take care not to drop the casting as it may break.
7. The glass can now be removed out the same opening.
8. Replacement is the reverse of the above procedure with the following notes.
9. Fully tighten the 4 removable section securing screws before attempting to tension the glass in the frame.
10. Fit the 4 long locating screws leaving them protruding by approx 4mm, this correctly locates the casting inside the frame.

11. Now start tensioning the frame to the glass by gently turning the adjusting screws counterclockwise working your way diagonally around the 6 screws [8 for Ambie Plus]. Do not over tighten.
12. You will need to go around 2 or 3 times as the glass tape compresses, take care not to over tighten as you will bend the frame edges. An approximate force of 5 to 10Kg on the end of the Allen key is enough.
13. Now retighten the 4 external locating screws and refit the latch assembly.

Door seals

Over time, usually 3-4 years, the door and glass seals will become hard and cause air to leak into the firebox, causing the appliance to 'over fire'. Your Metro retailer stocks replacement woven fibreglass door and glass seals, which need replacing when they become hard and over worn.

The door of your Metro is easily removed. Hold it in both hands and lift the hinge end of the door up and over the top hinge pin, then lower the door from the bottom hinge pin.

Side bricks

Hair-line cracks are not uncommon and are a result of the intense heat within the Metro's firebox, coupled with mechanical damage caused by accidental impact when fuel is being loaded. However if the side bricks become cracked to the extent that they start to break up, they must be replaced.

Door adjustment

From time to time as the door rope and glass tapes compress it becomes necessary to adjust the door. There are 2 areas that can be adjusted.

1. Door latch pin, using a 6mm hex key hold the cap screw and loosen the nut inside the firebox, gently tap the latch pin assembly to the rear of the fire a couple of millimeters, retighten and try the door, repeat if required, make sure the roller is still free to rotate. Be sure not to set the pin too far back as this latch design requires very little force from the user to obtain a good seal, it should be just firm at the final latching movement.
2. Door hinge, as you close the door you should feel the door rope should start to contact the firebox lip when the door latch is about 30mm away from the latch pin, if it doesn't or you can see a gap looking down between the rope and the firebox at the hinge end when the door is closed, open the door and loosen the top hinge bolt and screw the top jacking screw clockwise 1 full turn, nip the bolt up then loosen the bottom retaining bolt and unscrew counterclockwise the bottom jacking screw 1 full turn while pushing down on the opened door this will force the hinge to rotate around the top bolt until the bottom jack screw bears against the jacking plate, retighten both bolts and close the door, repeat if required.

Ash removal

Over a period of time ash will build up in the base of the Metro's firebox and require removal. The time this build-up takes depends on the density and cleanliness of your fuel.

To remove the excess ash your Metro should not be operating.

- Open the door, and using a hearth shovel or similar, empty the excess ash directly into a steel or non-combustible container.
- If the ash is not disposed of immediately, be careful where you store it, as the ash can retain heat for many days and become a fire hazard.
- You must leave a bed of ash in the base of the firebox approximately 10mm deep; this insulates the base of the firebox and improves combustion.

Top baffle

This is a 'sacrificial' wear part of the firebox and should be checked monthly. Usually only the "Promet" (white board) front/underneath section needs to be replaced when it starts to disintegrate.

Note: Cracks in the promet are not uncommon and have no adverse effect on the operation of your Metro. These cracks are the result of intense heat coupled with expansion and contraction. Burning wood which is not properly seasoned, i.e. 25% moisture content or more, will over time cause the promet to disintegrate and require replacement.

Flue systems

Should be checked annually, particularly the bottom end of the lower flue section at its rear lock formed joint. If deterioration is noticed contact your Metro retailer or installer.

The flue pipe should also be swept a minimum of once a year, or as required during the winter season. If smoke enters the room when you open the Metro's door this usually indicates the flue pipe is becoming restricted and needs cleaning. The frequency of flue pipe cleans depends on many factors, with the main variables being:

- The seasoning of the wood. If not properly seasoned you will require frequent flue pipe cleans.
- The density of the wood. Softwoods generally result in more deposits building up in the flue pipe.

To clean the flue pipe of your Metro, proceed as follows:-

- Open the Metro's door fully, reach inside with the palm of your hand face-up and extended, lift the top baffle approximately 20mm, then lift it forward out through the door opening, placing it on a sheet of newspaper you have placed on the front of the floor protector.

  Note: Some appliances have a two piece top baffle.
- Close the door and slide the air control to the left.
- Once on the roof, remove the cowl from the top of flue system and sweep the flue pipe using a 150mm-diameter flue pipe brush as detailed in the instructions provided with the fluebrush.
- Once the flue pipe is clear, clean and refit the cowl. Remove the excess soot which has fallen into the firebox, leaving a layer of ash 10mm deep on the base of the firebox, then refit the top baffle.

Note: The baffle must be fitted so its rear is touching the back of the firebox; if uncertain refer to page 3 in the installation section at the front of this manual, which shows illustrations of the baffle location.

Troubleshooting your Metro wood fire

If your Metro is installed correctly, your fuel is dry and you operate your fire correctly, you will find it to be a pleasure to use. Metro's many years of experience within the wood heating industry has shown that dissatisfaction is mainly due to:

- unseasoned fuel
- faulty installation
- operational error
- or a combination of the above 3 points.

The following may be of assistance if you are experiencing any of these problems.

SMOKE ENTERS THE ROOM WHEN THE METRO'S DOOR IS AJAR (Possible reasons and solutions)

Check flue pipe joins:

If the flue pipe joins are not sealed correctly, the flue pipe will not draw as well as it should. The flue pipe join connecting into the flue spigot on top of the Metro is most critical, if this is not sealed correctly, smoke will enter the room when the door is ajar. To check this join is sealed correctly, run a match or lighter flame around the join. If the flame is sucked into the spigot then it is not sealed correctly. This check needs to be done when the fire is not going. Ensure you check the rear of the flue pipe/ spigot join, as due to the seam in the flue pipe, this is the most common area for not being sealed correctly.

Ensure the fuel you are using is correctly seasoned:

If you are burning unseasoned fuel (wet), the fire will cause nothing but problems. The Metro won't deliver much heat, it will be lazy, smoke will enter the room when the door is ajar, and the door glass will run black. Unseasoned fuel is the main contributor to excessive creosote deposits which can be corrosive to your appliance and flue system.

Flue pipe length is too short:

Add more flue pipe as the longer the flue system, the better the draw of the flue pipe. Please note, if you did not purchase the Metro ECO Flue System, you will not have the ECO Cowl which increases draw. We highly recommend the Metro ECO Cowl is fitted as this will increase the draw. If you already have an ECO Cowl and smoke is still entering the room, please add another 600mm length of flue pipe.

Downdraft:

If you have checked all of the above and the fire is still smoking into the room, it's possible there may be a down draft issue. Down draft is environmental and can be caused by many variables, and it is purely trial and error to ascertain the cause. Solutions may be:

- 'H' Cowl, designed purely for downdraft issues, but if you have an ECO Cowl fitted as standard, you will also need to add another 600mm of flue pipe to compensate as the H Cowl is shorter in length.
- Directional Cowl, designed for high wind areas.

Air control setting:

Ensure the air control setting is on high before opening the door to reload, as this increases the draw up the flue pipe. Open the door slowly.

If your Metro did not smoke, but its starting too and is getting worse:

The flue pipe is in need of a clean. It is recommended that the flue pipe be cleaned every season, however if you are burning the fire on low a lot, or are using unseasoned fuel, flue pipe cleans will be required more frequently.

Correct operation:

Modern day wood fires need to be operated hard and fast, more so than low and lazy to ensure the firebox and flue pipe runs hot and efficiently. If the fire and flue pipe is up to temperature it will perform extremely well, the smoke will draw up the flue pipe with ease, and the fire will produce good amounts of heat.

If the fire is operated on low a lot of the time, the door glass will run black, the flue pipe will tend to block up more frequently and the fire will end up smoking into the room when reloading. It's better to have a small fire running hard and fast, rather than a big fire running low and lazy.

OTHER ISSUES YOU MAY EXPERIENCE

I can smell smoke in the room after a low burn cycle:

The smell is creosote that will be seeping through the flue pipe join or out of the flue spigot onto an external surface, thus creating the smell in your room. The cause will be either unseasoned fuel, fuel mass too large, incorrect operation on low burn cycles or a combination. Creosote is very corrosive and excessive buildups will result in the flue pipe and potentially the flue spigot and upper burn chamber failing. The formation of excessive creosote is not an appliance issue, it is a fuel and operational issue. Failure of flue pipe or firebox due to creosote build up is not covered under warranty as excessive creosote build up is only possible from either unseasoned fuel or incorrect operation.

The Metro is noisy as it heats up and cools down:

There will always be some expansion and contraction noise as the Metro heats and cools. This can usually be reduced by loosening three nuts at the rear of the appliance. To remedy, locate the 25mm deep cavity at the rear of your Metro between the 'rear panel' and the 'inner rear heat shield'. You will see a 6mm nut and two 6mm bolt heads in this cavity. Using a 10mm ring or open ended spanner, loosen all three so they are finger tight only.

On all non-DV model Metro's the air channel that allows the combustion air to enter the fire is fitted to the top underneath of the door opening. It is fitted with two M6 bolts. Slightly loosen both of these bolts. Note: This does not apply to the ECO DV models.

The Metro won't turn down as much as it did

The door itself may need readjusting, the hinge and latch is slotted and allows for movement. Loosening the hinge and moving it back a few mm will make the door seal tighter and stop air leaking into the fire. The door and glass seals may be in need of replacing, which is generally required every 3-4 years.

Familiarise yourself with the instructions on page 9 before proceeding with this maintenance.

Warranty details for your Metro wood fire

Metro wood fires are manufactured in New Zealand, using the highest quality of materials, workmanship and the latest manufacturing techniques, which is why we offer a full 10 year firebox warranty and 1 year parts warranty for peace of mind.

METRO WARRANTY
(NZ Consumer laws apply to this warranty)

Pioneer Manufacturing Limited (Pioneer) warrants the steel firebox against defective materials and workmanship which would render it unfit for normal domestic use, from the date of purchase by the original consumer, for a period of 10 years.

Components including panel coating, door retainers, door seals, glass, trim, baffle & bricks are warranted for a period of 1 year from the date of original purchase for normal domestic use against defective materials and workmanship.

All associated accessories including, but not limited to, fans, flue systems, flue shields, wetbacks, tool sets, ash pots etc, are covered by a 1 year warranty against defective materials and workmanship.

It is recommended, but not a condition of this warranty, that a full service/inspection of the Metro wood fire be carried out at the end of each winter season.

Warranty Conditions:

- The Metro wood fire must be installed, operated and maintained strictly in accordance with the building code and this installation and operation manual.
- The Metro wood fire must be installed and used in a domestic application.
- This warranty covers appliance like for like replacement or repair at the manufacturer's discretion but excludes freight, travel, installation, labour and/or any other associated costs.
- Pioneer or their agents are not liable for any loss or expense direct or indirect arising from the failure of any part or operation of the appliance.
- Operation of this appliance in violation of the warnings in this operation and installation manual will void this warranty.
- Your Metro wood fire must be regularly maintained and we recommended it is also serviced annually. Proof of servicing may be required. If a wood fire is not regularly maintained and serviced, the life span will be reduced. If your Metro wood fire has been neglected, by not being regularly maintained and serviced, warranty may be declined.
- It is critical that the fire not be operated with over worn, faulty or missing door seals. Door seals will harden over time and become over-worn (3-4 year's) this will cause air to leak into the fire, causing the appliance to 'over fire'.
- It is critical that the fire not be operated with over worn, faulty or missing bricks, baffle plate or baffle extension (white board on or under the baffle plate)
- It is critical that the fire not be operated with cracked, or broken door glass.

⚠ IMPORTANT INFORMATION

Note: The above 3 points require regular inspection/ maintenance (every time the ash bed is cleaned out, generally 3-5 times a season) and if not maintained will void the firebox warranty. Please ensure you keep your proof of purchase/receipt on any parts you buy.

- A claim under this warranty should be directed to the retailer who supplied the Metro wood fire. If this is not possible write directly to the manufacturer stating details of fault, model and serial number of your Metro, date and proof of purchase and name of retailer where the Metro was purchased.

Warranty Exclusions:
This manufacturer's warranty does not cover:

- Service calls which are not related to any defect in the product (i.e. operational, installation or fuel issues). The cost of a service call will be charged if the problem is not found to be a product fault.
- Defects caused by factors other than normal domestic use or use in accordance with the product's operation manual.
- Defects caused through the product being operated in an "over-fired" manner resulting in sections of the firebox operating excessively hot to the point that sections glow red. (Note – This will result in distortion of the firebox)
- Defects to the product caused by accident, neglect, misuse or act of God.
- The cost of repairs carried out by non-authorised repairers or the cost of correcting such unauthorised repairs.
- Required maintenance as set out in this manual.

Service under this manufacturer's warranty must be provided by a repairer authorised by Pioneer Manufacturing Ltd. Such service shall be provided during normal business hours.

⚠ WARNING! Complete and retain these details at time of purchase:

Purchase Date _____

Serial Number _____

Model _____

Colour _____

Retailer _____

Metro - Visit us online today www.metrofires.co.nz

Metro Wood Fire Specifications

Metro have a Specifications Brochure available which details relevant compliance data for every model. This brochure is updated annually and details the minimum clearances and specifications for all models, which is generally required when applying for a building consent. See your Metro retailer to obtain a copy, or visit www.metrofires.co.nz

metrofires.co.nz

Visit the Metro website: www.metrofires.co.nz to view Metro's 'video demos' showing the latest in wood fire technology energy saving options. You can view the entire Metro product range, find out where your nearest Metro retailer is located or simply check out the latest specifications, installation requirements and emission and efficiency data for the Metro of your choice.

Pioneer heating accessories

Metro Accessories

Metro offer a range of heating accessories designed to compliment your Metro wood fire. See below for some of the products within our heating accessory range.

This range of accessories includes floor protectors, heat transfer systems, child guards, baffles, bricks and more. For further details ask your Metro retailer for a copy of the Metro heating accessories brochure, or visit www.metrofires.co.nz

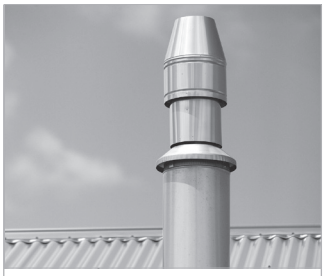

ECO Flue Systems

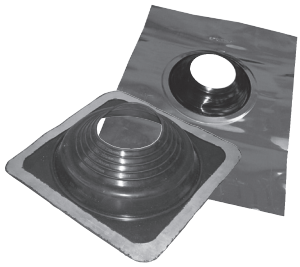

Flashrites and Versatiles

Wetbacks

High Temperature Paint

Child Guards

Heat Transfer Systems

Universal Door Seal Kits

Fire Cement And Silicone

Corner and Wall Floor Protectors

Glass Tape

Door Seal Rope

Chubb Smoke Detectors

ECO Flue System Installation Manual

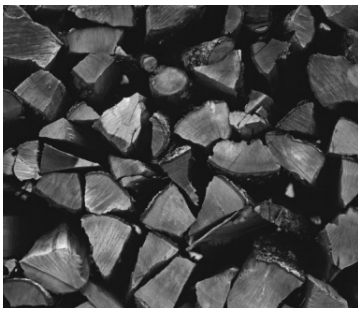

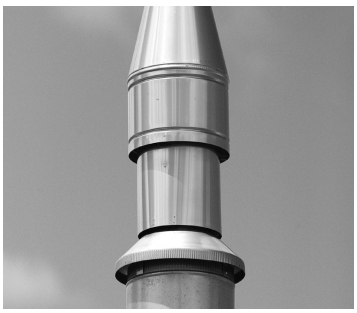

metrofires

ECO Flue Systems

Freestanding Flue Systems

ECO Flue System Installation Options.....2
ECO Base Flue Kit / ECO Option Kit 3
ECO Base Flue Kit Installation 4-5
ECO Option Kit Installation.....5-6

Insert Flue Systems

ECO Insert Flue Kit Installation 7
ECO Flue System Minimum Heights 8

03/16 © PIONEER MANUFACTURING LTD

NZHHA New Zealand Home Heating Association Inc.

NEW ZEALAND MADE

PIONEER MANUFACTURING LIMITED

PO Box 11, Inglewood 4347, New Zealand
Ph (06) 756 6520 • Fax (06) 756 6540
info@metrofires.co.nz • www.metrofires.co.nz

⚠ WARNING! Important Information

- **Metro ECO Flue Systems must be installed to allow unrestricted air supply from either the ceiling cavity for an ECO Base Flue Kit, or above the roof line if the Base & Option Kits are both installed. Please read these instructions and familiarise yourself with the installation options and various components of the ECO Flue Systems**
- **The ECO Base Flue Kit must be installed into a "vented" flat ceiling cavity, or have an ECO Option Kit added to the flue system to provide an external air supply**
- **The ECO Flue Systems shall be installed in accordance with AS/NZS2918:2001 and the appropriate requirements of the relevant building codes**
- **Any modification to this flue system that has not been approved in writing by the testing authority is considered to be in breach of all approvals granted**

⚠ CAUTION! Important Information

- **Mixing of flue system components from different sources or modifying the dimensional specification or components may result in hazardous conditions. Where such action is considered, the manufacturer should be consulted.**
- **Prior to installing the assembled flue pipe into a masonry chimney cavity, take careful note to ensure there are no overhead power lines in close proximity.**

ECO Flue Systems Installation Options

Detailed below are the more common installation methods for installing Metro ECO Flue Systems. To ensure a safe and efficient installation, this flue system must be installed as detailed below by either a registered installer, or someone competent in installing solid fuel appliances.

Single Storey Installations

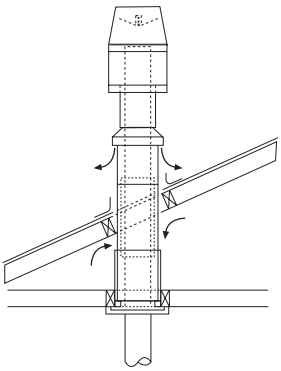

Flat Cavity Ceiling

ECO Base Flue Kit only required as air is drawn into the flue system direct from the ceiling cavity.

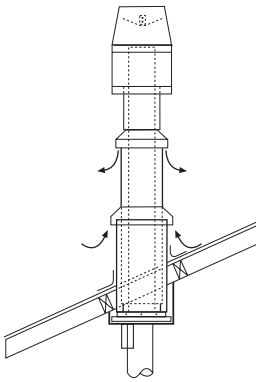

Sloping Ceiling

Both the ECO Base Flue Kit and ECO Option Kit are required to enable air to be drawn from outside the home.

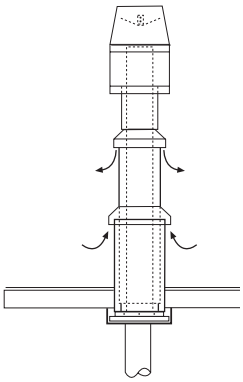

Flat Ceiling/Roof

Requires both ECO Base Flue Kit and ECO Option Kit as per sloping ceiling unless a vented ceiling cavity exists.

Two Storey Installations

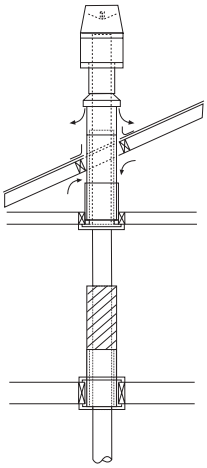

2nd Floor - Exposed Flue pipe

Requires an ECO Base Flue Kit only with additional lengths of flue pipe.

Additional components below are not supplied by Metrofires but are also required for this installation*

- A floor penetration kit
- 1x 1200mm long mesh/screen

*In accordance with AS/NZS2918:2001

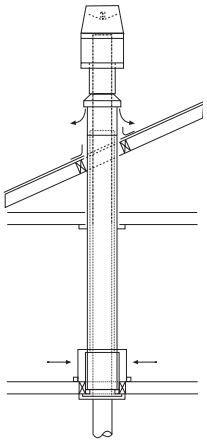

2nd Floor - Enclosed Flue pipe

Requires an ECO Base Flue Kit only with additional lengths of flue pipe.

Additional components below are not supplied by Metrofires but are also required for this installation*

- 200mm & 250mm inner/outer combination liners.
- 2nd floor vent cover and an additional ceiling plate with a 250mm diameter hole

*In accordance with AS/NZS2918:2001

ECO Base Flue Kit & ECO Option Kit Component Checklist

Metro offers both the ECO Base Flue Kit, which is designed to be installed on its own and the ECO Option Kit which is designed to be installed in conjunction with the ECO Base Flue Kit. The specific application for each of these two options is detailed below.

Metro ECO Base Flue Kit - Metro ECO Base Flue Kit is designed for installation into a building that has a "ceiling cavity" with unrestricted air supply as is the case with conventional homes. A vented ceiling cavity is required as the Base Kit draws its cooling air from the ceiling cavity.

Metro ECO Option Kits - The Metro ECO Option Kit is designed to be "added to" the Metro ECO Base Flue Kit for installations that do not have a vented ceiling cavity and require the flue systems cooling air to be drawn in from above the roofline (outside the building).

ECO BASE FLUE KIT ASSEMBLED

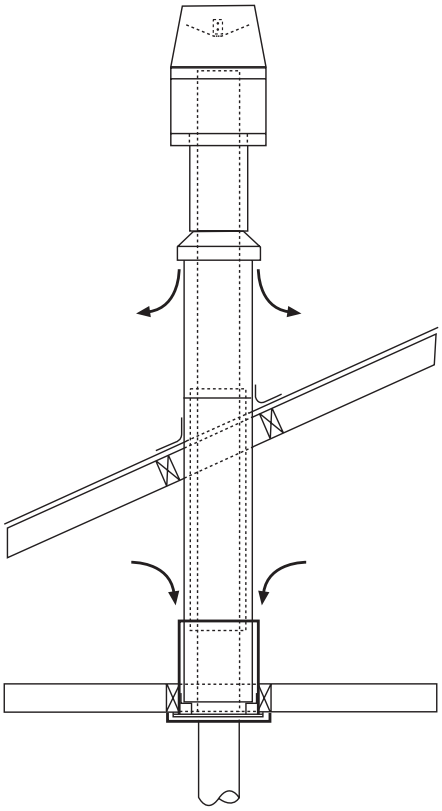

ECO BASE FLUE KIT COMPONENTS

(A) 1 x Stainless steel weather butterfly

(B) 1 x Stainless steel ECO cowl housing

(C) 1 x 225mm x 200mm diameter stainless steel outer casing extension

(D) 1 x 480mm long stainless steel flue pipe extension with flashing cone

(E) 1 x 1200mm x 150mm diameter stainless steel flue pipe

(F) 1 x 1200mm x 250mm diameter galvanised outer casing with 750mm long slip section

(G) 1 x 800mm x 200mm diameter galvanised inner casing

(H) 1 x Galvanised mounting plate with brackets and 300mm long x 300mm diameter casing attached

(I) 1 x insulation gasket

(J) 1 x black clip-on ceiling plate

(K) 2 x 1200mm lengths of 150mm diameter stainless steel flue pipe painted metallic black

(+) 1 x Plastic bag of assembly bolts

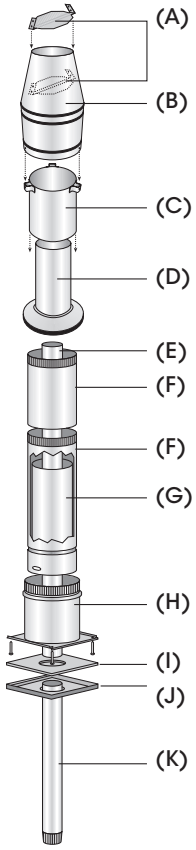

ECO BASE FLUE KIT & ECO OPTION KIT ASSEMBLED

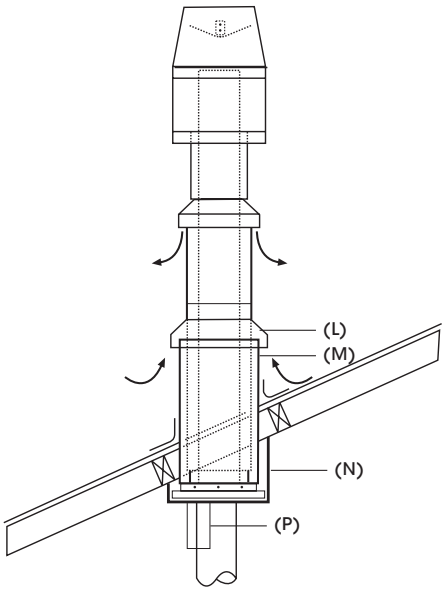

ECO OPTION KIT COMPONENTS

(L) External intake flashing cone

(M) 1x 780mm x 300mm diameter outer liner extension

(N) Drop box infill panel

(O) Drop box edge covers

(P) Ceiling plate mounted heat shield

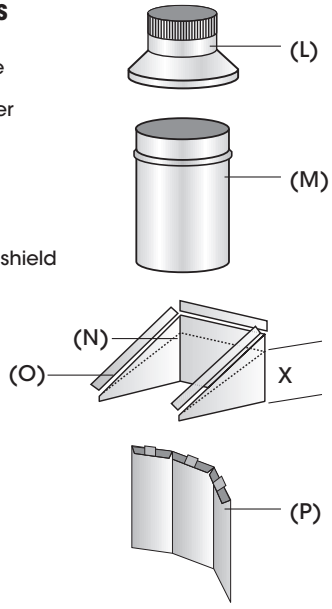

ECO BASE FLUE KIT COMPONENTS

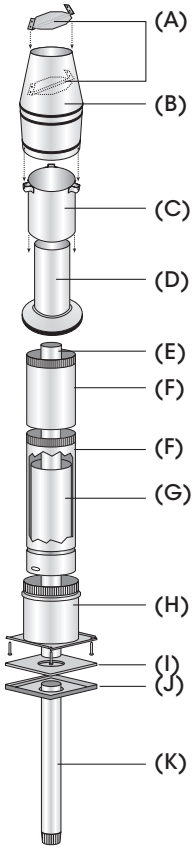

ECO OPTION KIT COMPONENTS

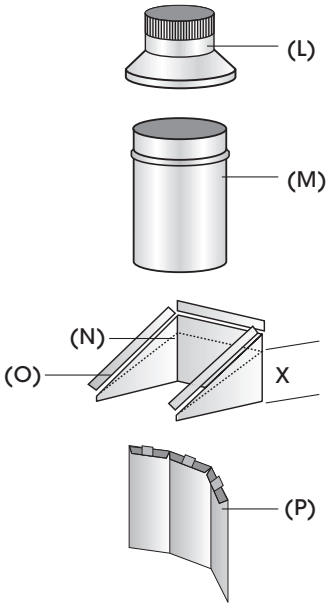

Having positioned the wood fire in the desired location, check to ensure the wood fire and floor protector have adequate clearances/projections, and that the flue system is clear of ceiling joists, trusses etc. (refer to the Wood Fire Installation and Operation Manual).

Note: ECO Flue Systems use stainless steel brackets enabling movement due to expansion, while centralising flue pipes and casings. These brackets may require resetting after transport, if they are too loose or tight during assembly;

1. At a point directly above the wood fires flue centre, cut a 300mm square hole through the ceiling and a 250mm diameter hole through the outer roof lining providing it is non combustible (iron, tiles etc) otherwise cut a 250mm square hole through the roof lining. "Trim out" the top face of the ceiling using timber nog's creating a square aperture measuring 300mm internally.

   Note: Certain flashing manufacturers detail specific size and shape of the aperture to be cut for their flashing, which must be adhered to.

2. Fit mounting plate (H) into the ceiling by sliding the 300mm diameter casing attached to the mounting plate up into the ceiling until the two upturned edges rest against the under side of the ceiling. Square the mounting plate to the wall and secure it in location with the four coach screws supplied, into the nogs just fitted. To further improve the rigidity of the installation, nail through the 300mm diameter casing at 4 points into the timber nogs.
3. Moving onto the roof with the 1200mm x 250mm diameter galvanised outer casing (F) with 750mm long slip section fitted, lower the slotted end of this casing (F) into the roof cavity until it locates inside the brackets on the top face of the mounting plate. Return back into the room and using the 3 x 6mm bolts and washers supplied, securely bolt the base of the 250mm diameter outer casing into the rivet nuts pre-fitted into the mounting plate brackets.

   Note: As there are three bolts, the outer casing can be rotated to ensure the lock-form seam is sheltered as much as possible from the prevailing weather direction.

4. Return back onto the roof and using a suitable flashing, weather proof the joint where the 250mm diameter outer casing penetrates the roof. Ensure the flashing used is compatible with the roofing material, and if fitting instructions are supplied with the flashing, these must be adhered to. Prior to fitting the flashing, by fitting brackets securing the outer casing (F) to the roof material will further improve rigidity of the installation.
5. While on the roof fit the 800mm x 200mm diameter galvanised inner casing (G).

   Note: This inner casing has a top and bottom, the bottom end has both internal and external brackets while the top end has external only. Fit the bottom end of this inner casing (G) down into the 250mm diameter outer casing (F) until the casings lower external brackets locate on the internal swadge of the outer casing.

⚠ WARNING! Important Information

- **If there is timber or combustibles within 25mm of the outer casing (F) in a zone "above the top end of the inner casing (G) and below the roof line" an additional 200mm inner casing must be fitted.**

6. Moving back into the home, remove the plastic film from the ceiling plate (J) and place it black side down over the flue outlet of the wood fire. Using a high temperature black aerosol, spray around the hole in the centre of the white insulation gasket, and when dry lay this centrally on the ceiling plate.
7. Unwrap the two painted flue pipes (K) taking care not to mark the painted surface (use a metallic black Pioneer aerosol for touch ups) and proceed to assemble the three flue pipe sections as described below;

- Smear an adequate amount of Pioneer fire cement inside the "top/un-crimped" end of both painted flue pipes (K).
- Taking the unpainted stainless steel flue pipe (E) insert its top "un-crimped" end up through the mounting plate (H) and up into the casings until its bottom "crimped" end is 1250mm above the top of the wood fire.
- Take one of the two painted stainless steel flue pipes (K) and fit its lower "crimped" end into the Metro wood fires flue outlet. Now lower the unpainted stainless steel flue (E) which is protruding down from the mounting plate so that it fully connects into the lower painted flue pipe (K). Ensure these two flue pipe sections are firmly connected and aligned, then secure with three stainless steel or monel rivets spaced equally around the joint.
- Lift the two assembled flue pipe sections so the bottom of the lower section is 1250mm above the top of the wood fire, and repeat the above procedure to fit the remaining painted flue pipe (K).

ECO Base Flue Kit Installation Instructions - continued

- With all three flue pipe sections securely joined, lift this three section assembly out of the wood fires flue outlet, then move it slightly off centre and lower the flue pipe assembly "on top" of the wood fires flue outlet. Smear an adequate amount of Pioneer fire cement inside the wood fires flue outlet (move the flue pipe assembly as required to ensure the entire flue outlet is coated in fire cement) then lower the flue pipe back into the wood fires flue outlet, with the vertical flue seam facing the rear.

8. Taking the ceiling plate (J) with insulation gasket (I) fitted which are laying on top of the wood fire, with the flue pipe passing through them. Carefully lift them up the flue pipe trying not to mark the painted flue, and clip the ceiling plate onto the mounting plate.

9. While still on the ground, assemble the ECO vertical discharge cowl as follows;

- Take the stainless steel weather butterfly (A) so the angled sections are facing up.

- With both arms and angled sections of the stainless steel weather butterfly (A) facing up, fit it into the stainless steel cowl housing (B), and secure in position through the holes provided with stainless steel rivets.

  Note: Once fitted the weather butterfly will be slightly angled within the cowl housing.

- Now fit the base of the cowl housing (B) over the brackets of the outer casing extension (C) ensuring the 3 x pre-punched holes punched in its lower skirt align centrally over the three brackets attached to the casing extension as illustrated. Push the cowl housing down fully until its internal swage rests on the casing extension brackets (the brackets should be "just but fully" inside the base of the cowl housing). Drill through the three pre-punched holes in the cowl housing through the three brackets and secure with stainless steel rivets.

10. Making your way back onto the roof, slide the 750mm long slip section of the outer casing (F) until the top of this slip section is "level" **(+ or -10mm)** with the top of the 150mm stainless steel flue pipe, then secure this slip section of the outer casing with rivets.

11. Fit the 480mm long flue pipe extension/flashing cone (D), with the flashing cone at the bottom, fit its short flue section inside the top of the already installed 150mm diameter flue pipe. Ensure the three brackets extended below the flashing cone fit "outside" the outer casing slip section. Drill through the pre-punched hole in all three brackets into the outer casing slip and secure with rivets.

12. Taking the removable section of the ECO cowl, position it over the top of the stainless steel flue pipe extension, and slide it down fully. This removable section does not require riveting and enables easy removal for future flue cleaning.

Installation Instructions with the ECO Option Kit

Dependent on whether you are installing into a flat roof/ceiling or sloping ceiling situation as detailed on page 2, will determine if you require all the components of the ECO Option Kit. If installing into a flat ceiling/roof you will not require the drop box or drop box edge covers.

Note: The 300mm diameter outer liner extension (M) supplied with the ECO Option Kit is supplied at the maximum length it has been tested, and must not be extended.

1. Slip the 300mm outer extension liner supplied with the ECO Option Kit over the 300mm outer liner "stub" attached to the mounting plate (H) supplied with the Base Kit. Permanently secure these two components together by drilling four evenly spaced holes around the circumference and rivet with stainless steel rivets.

2. At a point directly above the wood fires flue centre, cut a 300mm square hole through the ceiling and a 300mm diameter hole through the outer roof lining providing it is non combustible (iron, tiles etc) otherwise cut a 300mm square hole through the roof lining. "Trim out" the top face of the ceiling using timber nog's creating a square aperture measuring 300mm internally.

   Note: Certain flashing manufacturers detail specific size and shape of the aperture to be cut for their flashing, which must be adhered to.

3. Fit mounting plate (H) into the ceiling by sliding the 300mm diameter casing attached to the mounting plate up into the ceiling until the two upturned edges rest against the under side of the ceiling. Square the mounting plate to the wall and secure it in location with the four coach screws supplied, into the nogs just fitted. To further improve the rigidity of the installation, nail through the 300mm diameter casing at 4 points into the timber nogs.

- **If the ceiling is angled,** it is critical that the mounting plate is correctly positioned so the drop box in-fill panel can be fitted. Ensure the two "upturned folds" on the mounting plate are aligned parallel to the roof joists, i.e pointing towards the apex.

  You will only be able to use two of the securing holes provided in the mounting plate. To give additional support to the installation nail through the 300mm diameter outer liner into the timber framing, access is through the 200mm hole in the base of the mounting plate.

4. Moving onto the roof with the 1200mm x 250mm diameter galvanised outer casing (F) with 750mm long slip section fitted, lower the slotted end of this casing (F) into the roof cavity until it locates inside the brackets on the top face of the mounting plate. Return back into the room and using the 3 x 6mm bolts and washers supplied, securely bolt the base of the 250mm diameter outer casing into the rivet nuts pre-fitted into the mounting plate brackets. Return back onto the roof and using a suitable flashing, weather proof the joint where the 300mm diameter outer casing penetrates the roof. Ensure the flashing used is compatible with the roofing material, and if fitting instructions are supplied with the flashing, these must be adhered to.

Prior to fitting the flashing, by fitting brackets securing the outer casing (F) to the roof material will further improve rigidity of the installation.

Note: As there are three bolts, the outer casing can be rotated to ensure the lock-form seam is sheltered as much as possible from the prevailing weather direction.

5. Fit the external "intake" flashing cone supplied with the Option Kit as illustrated, and secure it to the top of the 300mm diameter extension liner through the 4 x brackets which protrude below the base of the external "intake" flashing cone.
6. While on the roof fit the 800mm x 200mm diameter galvanised inner casing (G).

Note: This inner casing has a top and bottom, the bottom end has both internal and external brackets while the top end has external only. Fit the bottom end of this inner casing (G) down into the 250mm diameter outer casing (F) until the casings lower external brackets locate on the internal swadge of the outer casing.

7. Moving back into the home, remove the plastic film from the ceiling plate (J) and place it black side down over the flue outlet of the wood fire. Using a high temperature black aerosol, spray around the hole in the centre of the white insulation gasket, and when dry lay this centrally on the ceiling plate.
8. Unwrap the two painted flue pipes (K) taking care not to mark the painted surface (use a metallic black Pioneer aerosol for touch ups) and proceed to assemble the three flue pipe sections as described below;

- Smear an adequate amount of Pioneer fire cement inside the "top/un-crimped" end of both painted flue pipes (K).
- Taking the unpainted stainless steel flue pipe (E) insert its top "un-crimped" end up through the mounting plate (H) and up into the casings until its bottom "crimped" end is 1250mm above the top of the wood fire.
- Take one of the two painted stainless steel flue pipes (K) and fit its lower "crimped" end into the Metro wood fires flue outlet. Now lower the unpainted stainless steel flue (E) which is protruding down from the mounting plate so that it fully connects into the lower painted flue pipe (K). Ensure these two flue pipe sections are firmly connected and aligned, then secure with three stainless steel or monel rivets spaced equally around the joint.
- Lift the two assembled flue pipe sections so the bottom of the lower section is 1250mm above the top of the wood fire, and repeat the above procedure to fit the remaining painted flue pipe (K).
- With all three flue pipe sections securely joined, lift this three section assembly out of the wood fires flue outlet, then move it slightly off centre and lower the flue pipe assembly "on top" of the wood fires flue outlet. Smear an adequate amount of Pioneer fire cement inside the wood fires flue outlet (move the flue pipe assembly as required to ensure the entire flue outlet is coated in fire cement) then lower the flue pipe back into the wood fires flue outlet, with the vertical flue seam facing the rear.

9. Taking the ceiling plate (J) with insulation gasket (I) fitted which are laying on top of the wood fire, with the flue pipe passing through them. Carefully lift them up the flue pipe trying not to mark the painted flue, and clip the ceiling plate onto the mounting plate.
10. While still on the ground, assemble the ECO vertical discharge cowl as follows;

- Take the stainless steel weather butterfly (A) so the angled sections are facing up.
- With both arms and angled sections of the stainless steel weather butterfly (A) facing up, fit it into the stainless steel cowl housing (B), and secure in position through the holes provided with stainless steel rivets.

Note: Once fitted the weather butterfly will be slightly angled within the cowl housing.

- Now fit the base of the cowl housing (B) over the brackets of the outer casing extension (C) ensuring the 3 x pre-punched holes punched in its lower skirt align centrally over the three brackets attached to the casing extension as illustrated. Push the cowl housing down fully until its internal swage rests on the casing extension brackets (the brackets should be "just but fully" inside the base of the cowl housing). Drill through the three pre-punched holes in the cowl housing through the three brackets and secure with stainless steel rivets.

11. Measure dimension "X" as shown on page 3 and transfer this measurement to the drop box in-fill panel as shown.

- Cut the in-fill panel to the correct size and fit the 3 x edge covers.

Note: The side edge covers will require trimming on the ends to suit the angle of the ceiling.

- Secure the in-fill panel in position by fitting three rivets to each side through the holes provided.

12. Back in the room, lift the ceiling plate then attach the "ceiling plate mounted heat shield" to the lower face of the ceiling plate so that it acts as a deflector shield between the flue pipe and the lower side of the ceiling (refer assembled diagram on page 3). This heat shield has three tabs on its top face enabling it to be "clipped" into the 160mm diameter hole in the ceiling plate. Attach the ceiling plate by clipping it onto the mount plate and the installation is now complete.

⚠ WARNING! Important Information

- **If there is timber or combustibles within 25mm of the outer casing (F) in a zone "above the top end of the inner casing (G) and below the roof line" an additional 200mm inner casing must be fitted.**

ECO Insert Flue Kit Installation Instructions & Component Checklist

Please read these instructions fully prior to installation of the Insert Flue System and familiarise yourself with all the various components as illustrated right and listed below.

Note: Rivets, fire cement and chimney flashing plate are not included as they are supplied by the installer.

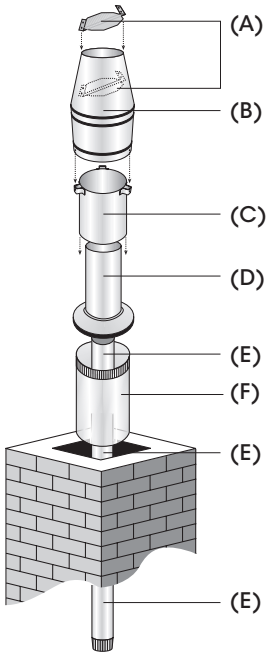

ECO INSERT FLUE KIT COMPONENTS

(A) 1 x Stainless steel weather butterfly

(B) 1 x Stainless steel ECO cowl housing

(C) 1 x 225mm x 200mm diameter stainless steel outer casing extension

(D) 1 x 480mm long stainless steel flue pipe extension with flashing cone

(E) 3 x 1200mm x 150mm diameter stainless steel flue pipe

(F) 1 x 600mm x 250mm diameter galvanised outer casing

This flue system has been manufactured and complies with AS/NZS2918:2001. To ensure a safe and efficient installation, this flue system must be installed as detailed below by either a registered installer, or someone competent in installing solid fuel appliances.

1. Check the masonry chimney for structural soundness and make any repairs that are necessary.

   Note: Most councils require the masonry chimney to be inspected prior to installation. The masonry chimney cavity must also be swept prior to installation.

2. Once the fireplace insert has been installed correctly as per the manufacturers instructions, look directly down the chimney to ensure the wood fire flue spigot is in line with the masonry chimney. (A torch will be required).
3. If you cannot see the flue spigot, a flue pipe offset will be required. If so, install the flue pipe offset so the top of it can be clearly seen from the top of the masonry chimney.
4. If an offset is required, an adjustable telescopic type is recommended. Measure the amount of offset required and adjust the telescopic offset to suit, after smearing an adequate amount of Pioneer fire cement onto the slip section of the offset to ensure a good seal, then rivet the offset in three locations around its circumference. (If the offset is used in its fully compressed form, it will be necessary to modify the end of the female slip section otherwise it will restrict the internal diameter) Apply a liberal amount of Pioneer fire cement into the flue outlet of the fireplace insert, and fit the lower crimped end of the offset into position inside the flue outlet, and bolt into position.

   Note: In some installations where it is not possible to fit offsets or rigid flue pipe due to the shape of the masonry chimney cavity, "Flexi flue" may be used.

5. Secure the flue pipes together and ensure the flue seams are in line. Flue pipe joints must be fully compressed with a considerable amount of fire cement to ensure a good seal, and then riveted together at three even points around the flue join. Prior to installing the assembled flue pipe into the masonry chimney cavity, take careful note to ensure there are no overhead power lines in close proximity.
6. Lower the flue pipe into the masonry chimney, with the crimped end fitting into the fireplace insert flue outlet/offset, and securely attach with three rivets (offset/bend must be riveted to the flue pipe). For installations where extra lengths of flue pipe are required, or when the weather is poor, it will be easier to assemble the flue pipe lengths as they are lowered into the masonry chimney.
7. Secure the outer casing to the masonry chimney with suitable fasteners. A masonry chimney flashing plate will be required to weatherproof/seal the masonry chimney top. Note: The top of the outer casing must be "level" **(+ or -10mm)** with the top of the 150mm stainless steel flue pipe.
8. Assemble the ECO vertical discharge cowl as follows;

- Take the stainless steel weather butterfly (A) so the angled sections are facing up.
- With both arms and angled sections of the stainless steel weather butterfly (A) facing up, fit it into the stainless steel cowl housing (B), and secure in position through the holes provided with stainless steel rivets.

  Note: Once fitted the weather butterfly will be slightly angled within the cowl housing.

- Now fit the base of the cowl housing (B) over the brackets of the outer casing extension (C) ensuring the 3 x pre-punched holes punched in its lower skirt align centrally over the three brackets attached to the casing extension as illustrated. Push the cowl housing down fully until its internal swage rests on the casing extension brackets (the brackets should be "just but fully" inside the base of the cowl housing). Drill through the three pre-punched holes in the cowl housing through the three brackets and secure with stainless steel rivets.

  The removable section of the ECO cowl is now fully assembled.

9. Making your way back onto the roof, fit the 480mm long flue pipe extension/flashing cone (D), with the flashing cone at the bottom. Fit the short flue section inside the top of the already installed 150mm diameter flue pipe. Ensure the three brackets extended below the flashing cone fit "outside" the outer casing slip section. Drill through the pre-punched hole in all three brackets into the outer casing slip and secure with rivets.
10. Taking the "removable section of the ECO cowl" assembled in section (8) above, position it over the top of the stainless steel flue pipe extension, and slide it down fully. This removable section does not require riveting and therefore enables easy removal for future flue cleaning.

Minimum Heights for all Metro Flue Systems In compliance with AS/NZS2918:2001

The Metro ECO Flue Systems comply with AS/NZS2918:2001 and its 4.6 metre height requirement (4.6 metre minimum from the top of the floor protector to the top of the flue pipe). However as external structures and the proximity of other buildings will differ for every installation, some situations will require additional flue height to comply with the standard. Refer to Diagrams 3 and 4 below. (All measurements in mm)

Note: AS/NZS2918:2001 Section 4, details flue system installation requirements in full.

DIAGRAM 3

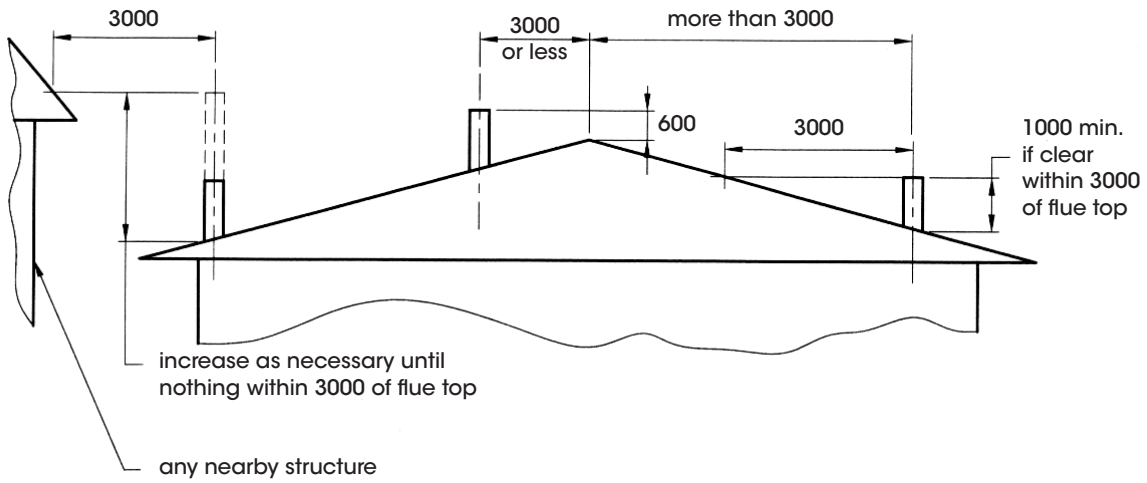

DIAGRAM 4

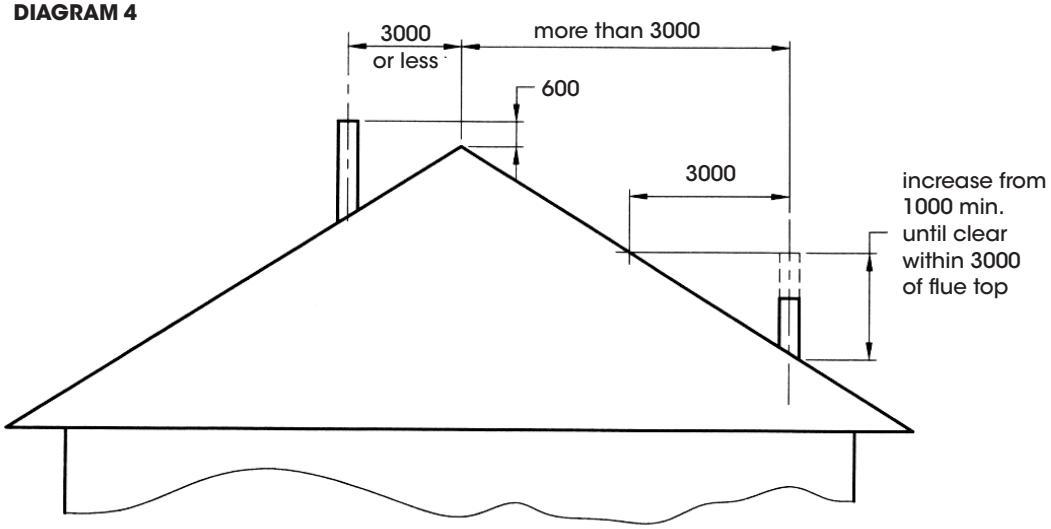

04/2013

BOWMAC®

BOTTOM PLATE SCREW BOLT

M10 X 140 BOWMAC BLUE HEAD

- ★ Complies with Clause 7.5.12.2 NZS 3604:2011 Proprietary Post Fixed Anchors
- ★ BRANZ tested. Ref# ST0895 Oct. 2012
- ★ Suitable for both external and internal wall frame anchor to concrete slab or masonry header blocks
- ★ Complies with durability requirements for “All Zones” in a “CLOSED” environment as defined in Table 4.1 NZS 3604:2011
- ★ See reverse side for installation details

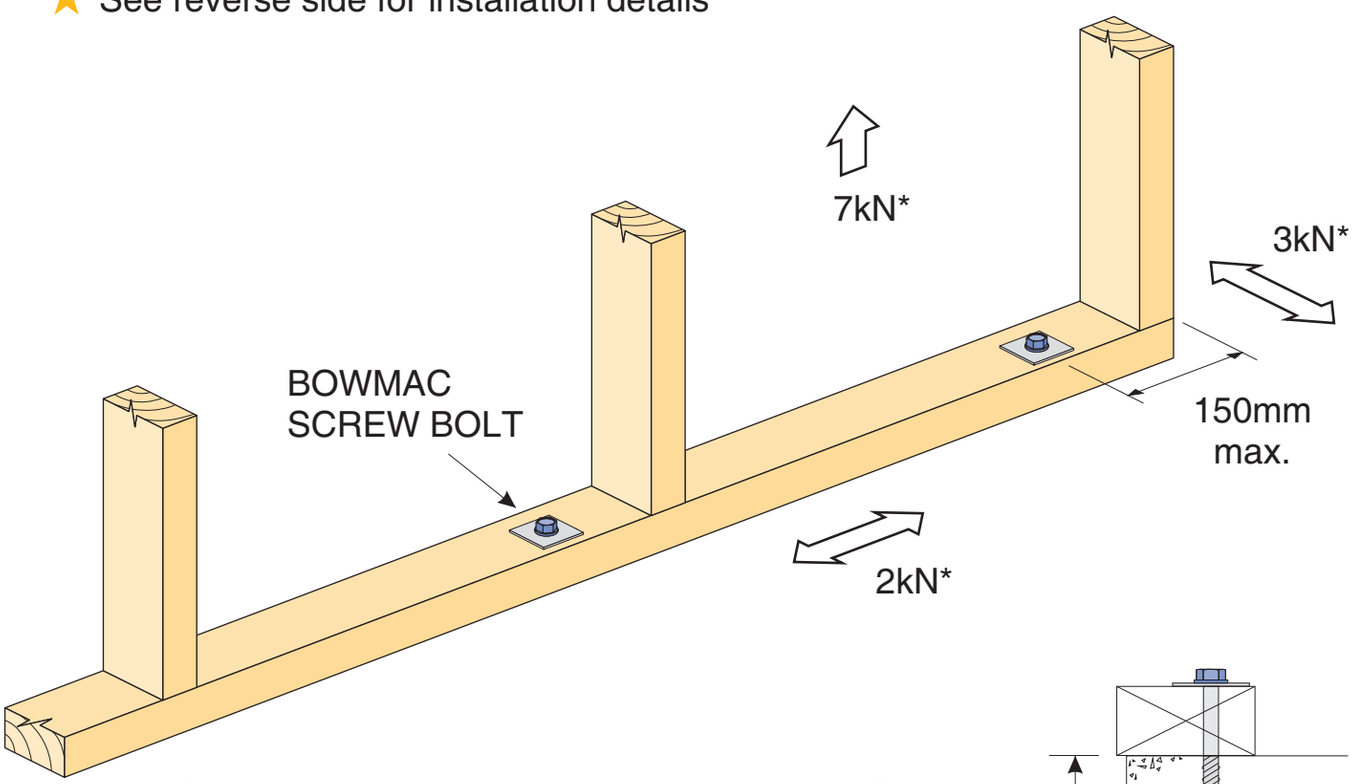

* Min. load capacity per anchor
from Clause 7.5.12.3 NZS 3604:2011

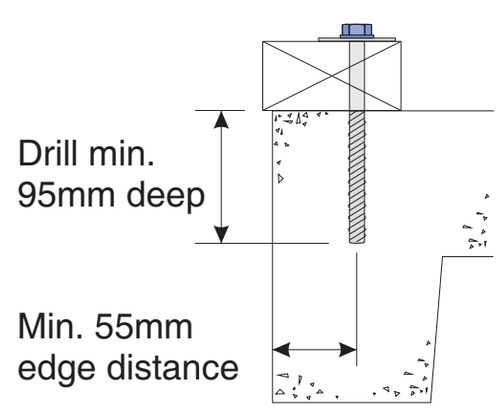

Available from leading Builders Supply Merchants throughout New Zealand

MiTek®

© Copyright 2013 MiTek Holdings, Inc.
All rights reserved.

Installation Details

★ Install BOWMAC SCREW BOLT and washer supplied to concrete slabs at 900mm max. crs., or 600mm max. crs. when using masonry header blocks.

★ SCREW BOLT must be located within 150mm from end of timber wall frame.

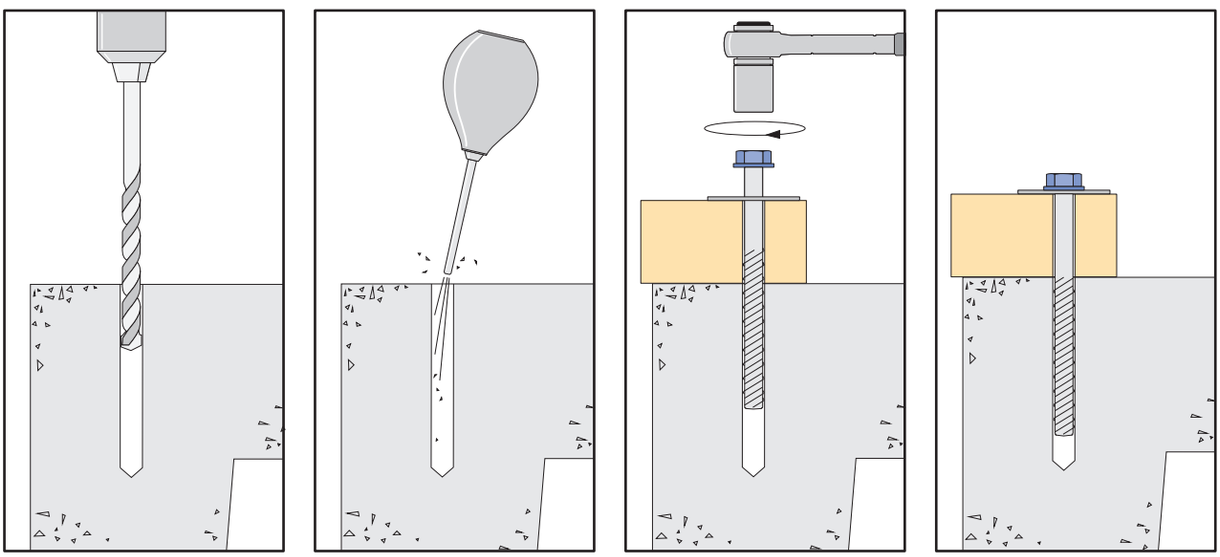

- Use a 10mm diameter masonry bit for drilling into concrete substrate.
- Drill a hole into the concrete base to a minimum depth of 95mm and clean out dust and debris from hole prior to installation of BOWMAC SCREW BOLT.
- Insert SCREW BOLT through washer and timber and into the hole.
- Begin tightening SCREW BOLT by applying downward pressure when engaging the first thread.
- Additional downward pressure may be required for installation in high strength, dense concrete.
- Continue tightening SCREW BOLT until the head is firmly seated against the washer.
- In extremely dense material, use of an impact wrench is recommended.
- Ensure SCREW BOLT is at the required embedment depth.
- Don't exceed the maximum clamping torque of 80Nm.
- The installation is now complete.

Installation Tips

- Use quality hexagonal socket with a ratchet spanner.
- Where substrate allows, a torque controlled wrench can be used.
- During installation debris or dust created by the thread cutting action may cause some resistance to be experienced. This is easily overcome by unscrewing the BOWMAC SCREW BOLT for one turn, or more and then continue to fix to the full embedment.

Code: **BPS**
Packed: **10 SCREW BOLTS & washers per bag**
5 bags per carton outer

MiTek New Zealand Limited

AUCKLAND
PO Box 58-014, Botany 2163
Phone: 09-274 7109
Fax: 09-274 7100

CHRISTCHURCH
PO Box 8387, Riccarton 8440
Phone: 03-348 8691
Fax: 03-348 0314

www.miteknz.co.nz

MITEK® LUMBERLOK® BOWMAC®

© Copyright 2013 MiTek Holdings, Inc.
All rights reserved.

BRANZ Appraised

Appraisal No. 651 [2009]

THERMAKRAFT COVERTEK 407 FIRE RETARDANT SELF-SUPPORTING ROOF UNDERLAY

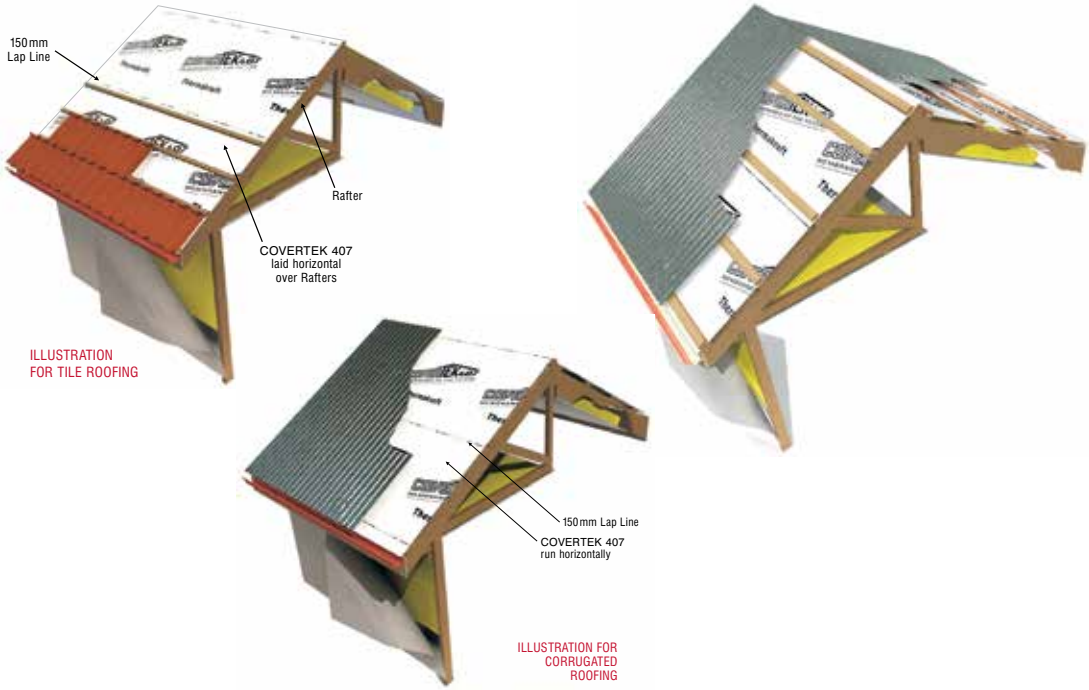

Appraisal No. 651 (2009)

Amended 02 September 2013.

BRANZ Appraisals

Technical Assessments of products for building and construction.

Thermakraft Industries (NZ) Ltd

PO Box 58 112
Greenmount
Auckland

Tel: 09 273 3727

Fax: 09 273 3726

Free phone: 0800 806 595

www.thermakraft.co.nz

BRANZ

1222 Moonshine Rd,
RD1, Porirua 5381
Private Bag 50 908
Porirua 5240,
New Zealand
branz.co.nz

Product

1.1 Thermakraft Covertek 407 Fire Retardant Self-Supporting Roof Underlay is a synthetic building underlay for use under roof claddings. The product consists of a micro-porous water resistant film laminated to two layers of non woven spun-bonded polyolefin.

Scope

2.1 Thermakraft Covertek 407 Fire Retardant Self-Supporting Roof Underlay has been appraised for use as a self-supporting roof underlay on buildings within the following scope:

- the scope limitations of NZBC Acceptable Solution E2/AS1, Paragraph 1.1 with regards to building height and floor plan area; and,
- with masonry tile roof cladding; and,
- with metal tile and profiled metal roof cladding; and,
- situated in NZS 3604 Wind Zones up to, and including Extra High.

Building Regulations

New Zealand Building Code (NZBC)

3.1 In the opinion of BRANZ, Thermakraft Covertek 407 Fire Retardant Self-Supporting Roof Underlay, if used, designed, installed and maintained in accordance with the statements and conditions of this Appraisal, will meet, or contribute to meeting the following provisions of the NZBC:

Clause B2 DURABILITY: Performance B2.3.1 (a), not less than 50 years, B2.3.1 (b), 15 years and B2.3.2. Thermakraft Covertek 407 Fire Retardant Self-Supporting Roof Underlay meets these requirements. See Paragraphs 9.1 and 9.2.

Clause E2 EXTERNAL MOISTURE: Performance E2.3.2. When used as part of the roof cladding system, Thermakraft Covertek 407 Fire Retardant Self-Supporting Roof Underlay will contribute to meeting this requirement. See Paragraphs 12.1 and 12.2.

Clause F2 HAZARDOUS BUILDING MATERIALS: Performance F2.3.1. Thermakraft Covertek 407 Fire Retardant Self-Supporting Roof Underlay meets this requirement and will not present a health hazard to people.

3.2 This is an Appraisal of an **Alternative Solution** in terms of the New Zealand Building Code compliance.

Readers are advised to check the validity of this Appraisal by referring to the Valid Appraisals listing on the BRANZ website, or by contacting BRANZ.

Technical Specification

4.1 Thermakraft Covertek 407 Fire Retardant Self-Supporting Roof Underlay is a synthetic building underlay for use under roof claddings. The product consists of a micro-porous water resistant film laminated to two layers of non woven spun-bonded polyolefin. Thermakraft Covertek 407 Fire Retardant Self-Supporting Roof Underlay is coloured white on the top bottom faces.

4.2 The product is supplied in rolls 1.250 m wide x 20 m and 40 m long. The product is printed with the Thermakraft Covertek 407 Fire Retardant Self-Supporting Roof Underlay logo repeated along the length of the roll. The rolls are wrapped in clear polythene film.

Accessories

4.3 Accessories used with Thermakraft Covertek 407 Fire Retardant Self-Supporting Roof Underlay which are supplied by the installer are:

- Fixings - stainless steel staples, clouts, screws or proprietary underlay fixings, or other temporary fixings to attach the roof underlay to the framing.

Handling and Storage

5.1 Handling and storage of the product, whether on or off site, is under the control of the installer. The rolls must be protected from damage and weather. They must be stored on end, under cover, in clean, dry conditions and must not be crushed.

Technical Literature

6.1 Refer to the Appraisals listing on the BRANZ website for details of the current Technical Literature for Thermakraft Covertek 407 Fire Retardant Self-Supporting Roof Underlay. The Technical Literature must be read in conjunction with this Appraisal. All aspects of design, use, installation and maintenance contained in the Technical Literature and within the scope of this Appraisal must be followed.

Design Information

Timber and Steel Framing

7.1 Timber and steel roof framing must be provided in accordance with the requirements of the NZBC and the roof cladding manufacturer.

General

7.2 Thermakraft Covertek 407 Fire Retardant Self-Supporting Roof Underlay is intended for use as an alternative to conventional kraft paper roof underlays, which are fixed over timber or steel framed roofs in order to limit the entry of wind into the roof cavity, and to assist in the moisture management of the roof cladding system.

7.3 The material also provides a degree of temporary weather protection during early construction. However, the product will not make the roof weathertight and some wetting of the underlying structure is always possible before the roof cladding is installed. Hence, the entire building must be closed-in and made weatherproof before moisture sensitive materials such as ceiling linings and insulation materials are installed.

7.4 Thermakraft Covertek 407 Fire Retardant Self-Supporting Roof Underlay is suitable for use under roof claddings on buildings as a roof underlay as called up in NZBC Acceptable Solution E2/AS1, Table 23. Refer to Table 1 for the material properties of Thermakraft Covertek 407 Fire Retardant Self-Supporting Roof Underlay.

Readers are advised to check the validity of this Appraisal by referring to the Valid Appraisals listing on the BRANZ website, or by contacting BRANZ.

Table 1: NZBC E2/AS1 Table 23 Requirements

NZBC E2/AS1 Table 23 Roof Underlay Properties	Property Performance Requirement	Results
Absorbency	≥ 100 g/m^2	Pass > 150 g/m^2
Vapour Resistance	≤ 7 MN s/g	Pass
Water Resistance	≥ 100 mm	Pass
pH of Extract	≥ 6 and ≤ 9	Pass
Shrinkage	≤ 0.5%	Pass
Mechanical	Edge tear and tensile strength	Edge tear (Average): Machine direction = 320 N Cross direction = 289 N Tensile strength (Average): Machine direction = 6.0 kN/m Cross direction = 5.8 kN/m

7.5 Thermakraft Covertek 407 Fire Retardant Self-Supporting Roof Underlay is suitable for use at pitches less than 8° (minimum 3°). When used at pitches less than 8°, Thermakraft Covertek 407 Fire Retardant Self-Supporting Roof Underlay must be installed horizontally. At pitches greater than 8°, Thermakraft Covertek 407 Fire Retardant Self-Supporting Roof Underlay can be installed vertically or horizontally and must span no greater than 1200 mm in one direction.

Structure

8.1 Thermakraft Covertek 407 Fire Retardant Self-Supporting Roof Underlay is suitable for use in all Wind Zones of NZS 3604 up to, and including, Extra High.

Durability

9.1 Thermakraft Covertek 407 Fire Retardant Self-Supporting Roof Underlay meets code compliance with NZBC Clause B2.3.1 (a), not less than 50 years for roof underlays used where the roof cladding durability requirement or expected serviceable life is not less than 50 years, e.g. behind masonry roof tile cladding, and code compliance with NZBC Clause B2.3.1 (b), 15 years for roof underlays used where the roof cladding durability requirement is 15 years.

Serviceable Life

9.2 Provided it is not exposed to the weather or ultra-violet light for a total of more than 7 days, and provided the roof cladding is maintained in accordance with the cladding manufacturer's instructions and the roof cladding remains weather resistant, Thermakraft Covertek 407 Fire Retardant Self-Supporting Roof Underlay is expected to have a serviceable life equal to that of the roof cladding.

Control of Internal Fire and Smoke Spread

10.1 Thermakraft Covertek 407 Fire Retardant Self-Supporting Roof Underlay has an AS 1530 Part 2 flammability index of not greater than 5 and therefore meets the requirements of NZBC Acceptable Solutions C/AS2 to C/AS6, Paragraph 4.17.8 b), for the surface finish requirements of suspended flexible fabric used as an underlay to exterior cladding that is exposed to view in occupied spaces. It may therefore be used with no restrictions in all buildings.

Readers are advised to check the validity of this Appraisal by referring to the Valid Appraisals listing on the BRANZ website, or by contacting BRANZ.

Prevention of Fire Occurring

11.1 Separation or protection must be provided to Thermakraft Covertek 407 Fire Retardant Self-Supporting Roof Underlay from heat sources such as fire places, heating appliances, flues and chimneys. Part 7 of NZBC Acceptable Solutions C/AS1 – C/AS6 and NZBC Verification Method C/VM1 provide methods for separation and protection of combustible materials from heat sources.

External Moisture

12.1 Thermakraft Covertek 407 Fire Retardant Self-Supporting Roof Underlay must only be used under roof claddings that meet the requirements of the NZBC, such as those covered by NZBC Acceptable Solution E2/AS1, or roof claddings covered by a valid BRANZ Appraisal.

12.2 Thermakraft Covertek 407 Fire Retardant Self-Supporting Roof Underlay, when installed in accordance with the Technical Literature and this Appraisal, will assist in the total cladding system's compliance with NZBC Clause E2.

Installation Information

Installation Skill Level Requirements

13.1 Installation must always be carried out in accordance with the Thermakraft Covertek 407 Fire Retardant Self-Supporting Roof Underlay Technical Literature and this Appraisal, by competent tradespersons with an understanding of roof underlay installation.

Underlay Installation

14.1 Thermakraft Covertek 407 Fire Retardant Self-Supporting Roof Underlay must be fixed at maximum 300 mm centres to all framing members with large-head clouts 20 mm long, 6-8 mm stainless steel staples, self drilling screws or proprietary underlay fixings. The membrane must be pulled taut over the framing before fixing.

14.2 Thermakraft Covertek 407 Fire Retardant Self-Supporting Roof Underlay may be run vertically or horizontally at roof pitches greater than 8° and must be laid horizontally at roof pitches less than 8°. It must extend from the ridge and overhang the fascia board by 20-25 mm. Vertical laps must be no less than 150 mm wide. Horizontal laps must also be no less than 150 mm, with the direction of the lap ensuring that water is shed to the outer face of the underlay. End laps must be made over framing and be no less than 150 mm wide. To assist with achieving the correct lap dimension, Thermakraft Covertek 407 Fire Retardant Self-Supporting Roof Underlay has a 150 mm lap line printed continuously along the top face.

14.3 When fixing the product in windy conditions, care must be taken due to the large sail area created.

14.4 Any damaged areas of Thermakraft Covertek 407 Fire Retardant Self-Supporting Roof Underlay, such as tears, holes or gaps around service penetrations, must be repaired. Damaged areas can be repaired by covering with new material lapping the damaged area by at least 150 mm and taping, or by taping small tears.

Inspections

14.5 The Technical Literature must be referred to during the inspection of Thermakraft Covertek 407 Fire Retardant Self-Supporting Roof Underlay installations.

Readers are advised to check the validity of this Appraisal by referring to the Valid Appraisals listing on the BRANZ website, or by contacting BRANZ.

Basis of Appraisal

The following is a summary of the technical investigations carried out:

Tests

15.1 The following tests have been carried out on Thermakraft Covertek 407 Fire Retardant Self-Supporting Roof Underlay in accordance with NZBC Acceptable Solution E2/AS1, Table 23: tensile strength, edge-tear resistance and resistance to water vapour transmission in accordance with AS/NZS 4200.1, shrinkage in accordance with AS/NZS 4201.3, resistance to water penetration in accordance with AS/NZS 4201.4, surface water absorbency in accordance with AS/NZS 4201.6 and pH of extract in accordance with AS/NZS 1301.421s. A range of these tests were completed before and after Thermakraft Covertek 407 Fire Retardant Self-Supporting Roof Underlay was exposed to ultra-violet light.

15.2 The Flammability Index of Thermakraft Covertek 407 Fire Retardant Self-Supporting Roof Underlay has been evaluated in accordance with AS 1530.2.

Other Investigations

16.1 A durability opinion has been given by BRANZ technical experts.

16.2 An evaluation of the expected performance of Thermakraft Covertek 407 Fire Retardant Self-Supporting Roof Underlay in direct contact with metal roof cladding has been completed by BRANZ.

16.3 The practicability of installation of Thermakraft Covertek 407 Fire Retardant Self-Supporting Roof Underlay has been assessed by BRANZ and found to be satisfactory.

16.4 The Technical Literature, including installation instructions, has been examined by BRANZ and found to be satisfactory.

Quality

17.1 The manufacture of Thermakraft Covertek 407 Fire Retardant Self-Supporting Roof Underlay has been examined by BRANZ, including methods adopted for quality control. Details regarding the quality and composition of the materials used were obtained by BRANZ and found to be satisfactory.

17.2 The quality of supply to the market is the responsibility of Thermakraft Industries (NZ) Ltd.

17.3 Building designers are responsible for the design of the building, and for the incorporation of the roof underlay into their design in accordance with the instructions of Thermakraft Industries (NZ) Ltd.

17.4 Quality of installation is the responsibility of the installer in accordance with the instructions of Thermakraft Industries (NZ) Ltd.

Sources of Information

- AS 1530.2: 1993 Test for Flammability of Materials.
- AS/NZS 1301.421s: 1988 Determination of the pH value of aqueous extracts of paper, board and pulp - cold extraction method.
- AS/NZS 4200.1: 1994 Pliable building membranes and underlays - materials.
- AS/NZS 4201.3: 1994 Pliable building membranes and underlays - Methods of test – Shrinkage.
- AS/NZS 4201.4: 1994 Pliable building membranes and underlays - Methods of test – Resistance to water penetration.
- AS/NZS 4201.6: 1994 Pliable building membranes and underlays - Methods of test – Surface water absorbency.
- NZS 3604: 2011 Timber-framed buildings.
- Compliance Document for New Zealand Building Code External Moisture Clause E2, Department of Building and Housing, Third Edition July 2005 (Amendment 5, 1 August 2011).
- Ministry of Business, Innovation and Employment Record of Amendments for Compliance Documents and Handbooks.
- The Building Regulations 1992.

Readers are advised to check the validity of this Appraisal by referring to the Valid Appraisals listing on the BRANZ website, or by contacting BRANZ.

Amendments:

Amendment No. 1, dated 14 August 2009.

This Appraisal has been amended to change the use of Thermakraft Covertek 407 to a self-supporting underlay.

Amendment No. 2, dated 1 April 2010.

This Appraisal has been amended to cover the use of Thermakraft Covertek 407 in direct contact with metal based roof cladding, and to include current flammability test information which removes the restrictions on the use of the material.

Amendment No. 3, dated 23 July 2010.

This Appraisal has been amended to change the colour of Thermakraft Covertek 407 from red/white to white/white.

Amendment No. 4, dated 31 January 2012.

This Appraisal has been amended to update clause changes as required by the introduction of NZS 3604: 2011 and NZBC Acceptable Solution E2/AS1 Third Edition, Amendment 5.

Amendment No. 5, dated 2 September 2013.

This Appraisal has been amended to update clause changes as required by the introduction of NZBC Fire Clauses C1 – C6 Protection from Fire and A3 Building Importance Levels.

Readers are advised to check the validity of this Appraisal by referring to the Valid Appraisals listing on the BRANZ website, or by contacting BRANZ.

In the opinion of BRANZ, Thermakraft Covertek 407 Fire Retardant Self-Supporting Roof Underlay is fit for purpose and will comply with the Building Code to the extent specified in this Appraisal provided it is used, designed, installed and maintained as set out in this Appraisal.

The Appraisal is issued only to Thermakraft Industries (NZ) Ltd, and is valid until further notice, subject to the Conditions of Appraisal.

Conditions of Appraisal

1. This Appraisal:
   a) relates only to the product as described herein;
   b) must be read, considered and used in full together with the Technical Literature;
   c) does not address any Legislation, Regulations, Codes or Standards, not specifically named herein;
   d) is copyright of BRANZ.
2. Thermakraft Industries (NZ) Ltd:
   a) continues to have the product reviewed by BRANZ;
   b) shall notify BRANZ of any changes in product specification or quality assurance measures prior to the product being marketed;
   c) abides by the BRANZ Appraisals Services Terms and Conditions.
   d) Warrants that the product and the manufacturing process for the product are maintained at or above the standards, levels and quality assessed and found satisfactory by BRANZ pursuant to BRANZ's Appraisal of the product.
3. BRANZ makes no representation or warranty as to:
   a) the nature of individual examples of, batches of, or individual installations of the product, including methods and workmanship;
   b) the presence or absence of any patent or similar rights subsisting in the product or any other product;
   c) any guarantee or warranty offered by Thermakraft Industries (NZ) Ltd.
4. Any reference in this Appraisal to any other publication shall be read as a reference to the version of the publication specified in this Appraisal.
5. BRANZ provides no certification, guarantee, indemnity or warranty, to Thermakraft Industries (NZ) Ltd or any third party.

For BRANZ

Pieter Burghout
Chief Executive

Date of Issue:
27 May 2009

Readers are advised to check the validity of this Appraisal by referring to the Valid Appraisals listing on the BRANZ website, or by contacting BRANZ.

CERTIFICATE OF CONFORMITY

This product Certificate is issued under Section 269 of the Building Act 2004 for:

Thermakraft Covertek 407

Product Description

Thermakraft Covertek 407 Fire Retardant Self-Supporting Roof Underlay is a synthetic building underlay for use under roof claddings. The product consists of a micro-porous water resistant film laminated to two layers of non woven spun-bonded polyolefin. Thermakraft Covertek 407 Fire Retardant Self-Supporting Roof Underlay is coloured white on the top bottom faces.

Product purpose and use

Thermakraft Covertek 407 Fire Retardant Self-Supporting Roof Underlay has been assessed for use as a self-supporting roof underlay on buildings within the following scope:

- the scope limitations of NZBC Acceptable Solution E2/AS1 (Amendment 6, February 2014), Paragraph 1.1 with regards to building height and floor plan area; and,
- with masonry tile roof cladding; and,
- with metal tile and profiled metal roof cladding; and,
- situated in NZS 3604-2011 Wind Zones up to, and including Extra High.

Thermakraft Covertek 407 Fire Retardant Self-Supporting Roof Underlay is supplied in rolls 1.250 m wide x 20 m and 40 m long. The product is printed with the Thermakraft Covertek 407 Fire Retardant Self-Supporting Roof Underlay logo repeated along the length of the roll. The rolls are wrapped in clear polythene film.
Accessories used with Thermakraft Covertek 407 Fire Retardant Self-Supporting Roof Underlay which are supplied by the installer are:

- Fixings - stainless steel staples, clouts, screws or proprietary underlay fixings, or other temporary fixings to attach the roof underlay to the framing.

For use as an alternative to kraft paper roofing underlays: fixed over timber or steel framed roofs in order to limit the entry of wind into the roof cavity and to assist in the moisture management of the cladding system.

Certificate holder

Thermakraft Industries (NZ) Ltd www.thermakraft.co.nz
11 Turin Place, East Tamaki Auckland, New Zealand
Tel: +64 9 2733727

CodeMark Certification Body		11/3/2013	9/6/2016	9/6/2019	GM-CM30028-RevB
Global-Mark Pty Ltd, Suite 4.07, 32 Delhi Road, North Ryde NSW 2113, Australia Tel: +61 (0)2 9886 0222 www.Global-Mark.com.au	Herve Michoux Managing Director	Date of issue	Last update	Date of next re-certification	Certificate Number

The purpose of construction site audits is to confirm the practicability of installing the product; and to confirm the appropriateness and accuracy of installation instructions. In issuing this certificate, Global-Mark has relied on the independent expert and/or laboratory advise or reports.
This certificate is issued by Global-Mark Pty Limited, an independent certification body accredited by the product certification accreditation body (JAS-ANZ) appointed by the Chief Executive of the Ministry of Business Innovation and Employment under the Building Act 2004. The Ministry of Business Innovation and Employment does not in any way warrant, guarantee, or represent that the building method or product the subject of this certificate conforms with the New Zealand Building Code, nor accept any liability arising out of the use of the building method or product. The Ministry of Business Innovation and Employment disclaims, to the extent permitted by law, all liability (including negligence) for claims of losses, expenses, damages, and costs arising as a result of the use of the building method(s) or product(s) referred to in this certificate. This Certificate may only be reproduced in its entirety.
It is advised to check that this Certificate of Conformity is currently valid and not withdrawn, suspended or superseded by a later issue by referring to the Ministry of Business Innovation and Employment website, http://www.mbie.govt.nz/
New Zealand Building Code (NZBC) references the Building Code in force at the time of issuing the product certificate.

CERTIFICATE OF CONFORMITY

This product Certificate is issued under Section 269 of the Building Act 2004 for:

Thermakraft Covertek 407

Compliance with the New Zealand Building Code (NZBC):

- **Clause B2 DURABILITY:** Performance B2.3.1(a), not less than 50 years, B2.3.1(b), 15 years and B2.3.2. Thermakraft Covertek 407 Fire Retardant Self-Supporting Roof Underlay meets these requirements.
- **Clause C3 FIRE AFFECTING AREAS BEYOND THE FIRE SOURCE:** Performance C3.4 (c) Thermakraft Covertek 407 Fire Retardant Self-Supporting Roof Underlay meets this requirement.
- **Clause E2 EXTERNAL MOISTURE:** Performance E2.3.2. When used as part of the roof cladding system, Thermakraft Covertek 407 Fire Retardant Self-Supporting Roof Underlay will contribute to meeting this requirement.
- **Clause F2 HAZARDOUS BUILDING MATERIALS:** Performance F2.3.1. Thermakraft Covertek 407 Fire Retardant Self-Supporting Roof Underlay meets this requirement and will not present a health hazard to people.

Subject to the following conditions and limitations:

- Certificate holder will notify Global-Mark Pty Ltd in accordance with Regulation 15 of the Building (Product Certification) Regulations 2008
- Maintaining the validity of BRANZ Appraisal No. 651 (2009) Thermakraft Covertek 407 Fire Retardant Self Supporting Roof Underlay. (refer to www.branz.co.nz)

Design and Installation Conditions:

- **Timber and Steel Framing**

Timber and steel roof framing must be provided in accordance with the requirements of the NZBC and the roof cladding manufacturer.

- **General**

Table 1: NZBC E2/AS1 (Amendment 6, February 2014) Table 23 Requirements

Roof Underlay Properties	Property Performance Requirement	Results
Absorbency	≥ 150 g/m^2	Pass > 150 g/m^2
Vapour Resistance	≤ 7 MN s/g	Pass
Water Resistance	≥ 100 mm	Pass
pH of Extract	≥ 6 and ≤ 9	Pass
Shrinkage	≤ 0.5%	Pass
Mechanical	Edge tear and tensile strength	Edge tear (Average): • Machine direction = 320 N • Cross direction = 289 N Tensile strength (Average): • Machine direction = 6.0 kN/m • Cross direction = 5.8 kN/m

Thermakraft Covertek 407 Fire Retardant Self-Supporting Roof Underlay is intended for use as an alternative to conventional kraft paper roof underlays, which are fixed over timber or steel framed roofs in order to limit the entry of wind into the roof cavity, and to assist in the moisture management of the roof cladding system.
The material also provides a degree of temporary weather protection during early construction. However, the product will not make the roof weathertight and some wetting of the underlying structure is always possible before the roof cladding is installed. Hence, the entire building must be closed-in and made weatherproof before moisture sensitive materials such as ceiling linings and insulation materials are installed.
Thermakraft Covertek 407 Fire Retardant Self-Supporting Roof Underlay is suitable for use under roof claddings on buildings as a roof underlay as called up in NZBC Acceptable Solution E2/AS1 (Amendment 6, February 2014), Table 23. Refer to Table 1 for the material properties of Thermakraft Covertek 407 Fire Retardant Self-Supporting Roof Underlay.

Thermakraft Covertek 407 Fire Retardant Self-Supporting Roof Underlay is suitable for use at pitches less than 8° (minimum 3°). When used at pitches less than 8°, Thermakraft Covertek 407 Fire Retardant Self-Supporting Roof Underlay must be installed horizontally. At pitches greater than 8°, Thermakraft Covertek 407 Fire Retardant Self-Supporting Roof Underlay can be installed vertically or horizontally and must span no greater than 1200 mm in one direction.

- **Structure**

Thermakraft Covertek 407 Fire Retardant Self-Supporting Roof Underlay is suitable for use in all Wind Zones of NZS 3604-2011 up to, and including, Extra High.

- **Durability**

Thermakraft Covertek 407 Fire Retardant Self-Supporting Roof Underlay meets code compliance with NZBC Clause B2.3.1 (a) (Amendment 7, April 2011), not less than 50 years for roof underlays used where the roof cladding durability requirement or expected serviceable life is not less than 50 years, e.g. behind masonry roof tile cladding, and code compliance with NZBC Clause B2.3.1 (b), 15 years for roof underlays used where the roof cladding durability requirement is 15 years.

- **Serviceable Life**

Provided it is not exposed to the weather or ultra-violet light for a total of more than 7 days, and provided the roof cladding is maintained in accordance with the cladding manufacturer's instructions and the roof cladding remains weather resistant, Thermakraft Covertek 407 Fire Retardant Self-Supporting Roof Underlay is expected to have a serviceable life equal to that of the roof cladding.

- **Control of Internal Fire and Smoke Spread**

Thermakraft Covertek 407 Fire Retardant Self-Supporting Roof Underlay has an AS 1530 Part 2 – 1993 (including Amendment 1) flammability index of not greater than 5 and therefore meets the requirements of NZBC Acceptable Solutions C/AS2 to C/AS6 (July 2014), Paragraph 4.17.8 (b), for the surface finish requirements of suspended flexible fabric used as an underlay to exterior cladding that is exposed to view in occupied spaces. It may therefore be used with no restrictions in all buildings.

- **Prevention of Fire Occurring**

Separation or protection must be provided to Thermakraft Covertek 407 Fire Retardant Self-Supporting Roof Underlay from heat sources such as fire places, heating appliances, flues and chimneys. Part 7 of NZBC Acceptable Solutions C/AS1 – C/AS6 (July 2014), and NZBC Verification Method C/VM1 (July 2014) provide methods for separation and protection of combustible materials from heat sources).

- **External Moisture**

Thermakraft Covertek 407 Fire Retardant Self-Supporting Roof Underlay must only be used under roof claddings that meet the requirements of the NZBC, such as those covered by NZBC Acceptable Solution E2/AS1 (Amendment 6, February 2014). Thermakraft Covertek 407 Fire Retardant Self-Supporting Roof Underlay, when installed in accordance with the Application and Installation document May 2012, will assist in the total cladding system's compliance with NZBC Clause E2 (Amendment 6, February 2014).

- **Underlay Installation**

Thermakraft Covertek 407 Fire Retardant Self-Supporting Roof Underlay must be fixed at maximum 300 mm centres to all framing members with large-head clouts 20 mm long, 6-8 mm stainless steel staples, self drilling screws or proprietary underlay fixings. The membrane must be pulled taut over the framing before fixing.

Thermakraft Covertek 407 Fire Retardant Self-Supporting Roof Underlay may be run vertically or horizontally at roof pitches greater than 8° and must be laid horizontally at roof pitches less than 8°. It must extend from the ridge and overhang the fascia board by 20-25 mm. Vertical laps must be no less than 150 mm wide. Horizontal laps must also be no less than 150 mm, with the direction of the lap ensuring that water is shed to the outer face of the underlay. End laps must be made over framing and be no less than 150 mm wide. To assist with achieving the correct lap dimension, Thermakraft Covertek 407 Fire Retardant Self-Supporting Roof Underlay has a 150 mm lap line printed continuously along the top face.

When fixing the product in windy conditions, care must be taken due to the large sail area created.

Any damaged areas of Thermakraft Covertek 407 Fire Retardant Self-Supporting Roof Underlay, such as tears, holes or gaps around service penetrations, must be repaired. Damaged areas can be repaired by covering with new material lapping the damaged area by at least 150 mm and taping, or by taping small tears.

- **Installation Conditions**

Shall be carried out by:

- A Licensed Building Practitioner with experience in roof cladding installation; or,
- By competent tradespersons with an understanding of roof underlay installation.

The installer shall also:

Comply with all relevant technical information relating to the products use, including information contained within the Thermakraft Covertek 407 Fire Retardant Self-Supporting Roof Underlay Application and Installation document May 2012 and the BRANZ Appraisal (refer to www.branz.co.nz).

End of record

BRANZ Appraised

Appraisal No. 329 [2005]

SUPERCOURSE 500 DAMP-PROOF COURSE AND CONCEALED FLASHING

Appraisal No. 329 (2005)

This Appraisal replaces BRANZ Appraisal No. 329 (1996) issued October 1996.

Amended 30 August 2013.

BRANZ Appraisals

Technical Assessments of products for building and construction.

Thermakraft Industries (NZ) Ltd

PO Box 58 112
Greenmount
Auckland

Tel: 09 273 3727

Fax: 09 273 3726

Free phone: 0800 806 595

www.thermakraft.co.nz

BRANZ

1222 Moonshine Rd,
RD1, Porirua 5381
Private Bag 50 908
Porirua 5240,
New Zealand
branz.co.nz

Product

1.1 Supercourse 500 is a single layer black polyethylene, embossed on both faces to produce a small diamond pattern. It is for use as a general damp-proof course (DPC), and also as a concealed flashing for brick veneer cladding.

Scope

2.1 Supercourse 500 has been appraised for use as a damp-proof course within the following scope:

- for separating timber, wood-based products and metal from concrete, masonry or brick; and,
- as a moisture barrier and flashing in masonry veneer constructed in accordance with NZS 3604 and NZS 4229.

2.2 Supercourse 500 has also been appraised for use as a concealed flashing at jambs and sills of aluminium window and door joinery in masonry veneer walls constructed in accordance with NZS 3604.

Building Regulations

New Zealand Building Code (NZBC)

3.1 In the opinion of BRANZ, Supercourse 500 Damp-Proof Course and Concealed Flashing, if used, designed, installed and maintained in accordance with the statements and conditions of this Certificate, will meet, or contribute to meeting the following provisions of the NZBC:

Clause B2 DURABILITY: Performance B2.3.1 (a), 50 years. Supercourse 500 meets this requirement. See Paragraph 8.1.

Clause E2 EXTERNAL MOISTURE: Performance E2.3.2 and E2.3.3. When used as a DPC, Supercourse 500 will meet the requirements of E2.3.3. When used as a flashing as part of a masonry veneer cladding system, Supercourse 500 will contribute to meeting the requirements of E2.3.2. See Paragraphs 11.1 and 11.2.

Clause F2 HAZARDOUS BUILDING MATERIALS: Performance F2.3.1. Supercourse 500 meets this requirement and will not present a health hazard to people.

3.2 This Certificate appraises an **Alternative Solution** in terms of the New Zealand Building Code compliance.

Readers are advised to check the validity of this Appraisal by referring to the Valid Appraisals listing on the BRANZ website, or by contacting BRANZ.

Technical Specification

4.1 Supercourse 500 is 0.5 mm thick, extruded polyethylene film. It consists of a single layer of black polyethylene, embossed on both faces to produce a small diamond pattern. The total thickness of the product after embossing is 0.75 mm. Supercourse 500 is supplied in rolls 20 m long and is available in widths of 50, 75, 90, 100, 150, 200, 250, 300, 400, 500 and 1000 mm. Other widths are available upon request.

4.2 Each roll is labelled with the product name, dimensions, standards reference, and manufacturer's information.

Handling and Storage

5.1 Handling and storage of the product, whether on or off site, is under the control of the installer. The rolls must be protected from damage and weather and must be stored under cover, in clean, dry conditions.

Technical Literature

6.1 Refer to the Appraisals listings on the BRANZ website for details of the current Technical Literature for Supercourse 500. The Technical Literature must be read in conjunction with this Certificate. All aspects of design, use, installation and maintenance contained in the Technical Literature and within the scope of this Certificate must be followed.

Design Information

General

7.1 Supercourse 500 is a suitable moisture impermeable alternative to bituminous DPC's and flashings. It is intended for use as a DPC separating timber and wood-based products from concrete or masonry elements, or where required, timber jack studs or bearers from timber piles, e.g. where required by NZBC Acceptable Solution E2/AS1, Paragraph 10.2.3, or NZS 3604, Paragraph 2.3.3.

7.2 When used as a DPC, the roll width selected must enable the Supercourse 500 to extend at least 6 mm beyond each face of the timber in accordance with the requirements of NZBC Acceptable Solution E2/AS1, Paragraph 10.2.3(b), or NZS 3604, Paragraph 2.3.3(b).

7.3 Supercourse 500 is also suitable for use as a flashing material for weather sealing window and door joinery installations in masonry veneer wall claddings as detailed in the Technical Literature.

Timber Treatment

7.4 Supercourse 500 when used as a DPC or concealed flashing, is suitable for use in contact with timber treated with light organic solvent preservative (LOSP) or water-based timber preservatives.

Durability

Serviceable Life

8.1 Supercourse 500 is expected to have a serviceable life in excess of 50 years when it is installed in accordance with the requirements of this Certificate and the Technical Literature, provided it is not exposed to the weather or ultra-violet (UV) light for a total of more than 30 days, and is never exposed to chemicals, or solvents that will degrade polyethylene.

Control of Internal Fire and Smoke Spread

9.1 Damp-proof courses and flashings are exempt from the surface finish requirements of NZBC Acceptable Solutions C/AS1 – C/AS6 by NZBC Acceptable Solution C/AS1 Paragraph 4.2.2 e), and NZBC Acceptable Solutions C/AS2 – C/AS6 Paragraph 4.17.6 e).

Readers are advised to check the validity of this Appraisal by referring to the Valid Appraisals listing on the BRANZ website, or by contacting BRANZ.

Prevention of Fire Occurring

10.1 Separation or protection must be provided to Supercourse 500 from heat sources such as fire places, heating appliances, flues and chimneys. Part 7 of NZBC Acceptable Solutions C/AS1 – C/AS6 and NZBC Verification Method C/VM1 provide methods for separation and protection of combustible materials from heat sources.

External Moisture

11.1 Supercourse 500, when used as a DPC in accordance with this Certificate, prevents walls, floors and structural elements in contact with the ground from absorbing or transmitting moisture in quantities that could cause undue dampness or damage to building elements to meet the performance requirements of Clause E2.3.3.

11.2 Supercourse 500, when installed as a flashing in accordance with the Technical Literature and this Certificate, will assist in the masonry veneer cladding system meeting the performance requirements of Clause E2.3.2.

Installation Information

Installation Skill Level Requirements

12.1 Installation must always be carried out in accordance with the Technical Literature and this Certificate, by competent tradespersons with an understanding of DPC and flashing installation.

Supercourse 500 Installation

General

13.1 Strips of Supercourse 500 may be cut to length with a sharp knife.

DPC Installation

13.2 The surfaces to be separated must be smooth and flat, free from projections such as small stones or sharp ridges that may puncture the membrane when pressure is applied.

13.3 When used to separate timber and wood-based products from concrete or masonry, Supercourse 500 should be temporarily held in place with small hot-dip galvanised clouts or zinc plated staples. The strip of DPC must be wide enough to fully protect the width of the material in contact with the concrete or masonry. Refer also to Paragraph 7.2.

13.4 When used under timber plates fixed over concrete floor slabs and foundation walls, a small slit should be made in the material before pushing down over the bolts or fixings. Alternatively, a small hole can be formed by gently tapping the product resting on top of the bolt until a puncture is formed.

Flashing Installation

13.5 Supercourse 500 must be fixed in place to framing members at maximum 300 mm centres with small hot-dip galvanised clouts.

13.6 Horizontal and vertical joints must be no less than 75 mm wide, with the direction of the lap ensuring that water is shed to the outer face of the flashing.

13.7 At the sill/jamb junction, the jamb flashing must overlap the sill flashing.

Basis of Appraisal

The following is a summary of the technical investigations carried out:

Tests

14.1 The following tests have been carried out on Supercourse 500 by Amdel Ltd, a NATA Certified laboratory: Water permeability, thickness, mass per unit area, pigment, impact resistance, and labelling, all in accordance with AS/NZS 2904 and AS/NZS 4347. The test results have been reviewed by BRANZ experts and found to be satisfactory.

Readers are advised to check the validity of this Appraisal by referring to the Valid Appraisals listing on the BRANZ website, or by contacting BRANZ.

Other Investigations

15.1 Durability and weathertightness opinions were given by BRANZ technical experts.

15.2 The practicability of installation has been assessed by BRANZ and found to be satisfactory.

15.3 The Technical Literature, including installation instructions, has been examined by BRANZ and found to be satisfactory.

Quality

16.1 The manufacture of Supercourse 500 has been examined by BRANZ, and details of the methods adopted for quality control and the quality of the materials used, have been obtained.

16.2 The quality management system of the Supercourse 500 manufacturer, Cromford Pty Ltd, has been assessed and registered as meeting the requirements of ISO 9001: 2000 by SAI Global, Certificate Number QEC8059.

16.3 The quality of supply to the market is the responsibility of Thermakraft Industries (NZ) Ltd.

16.4 Building designers are responsible for the design of the building, and for the incorporation of Supercourse 500 into their design in accordance with the instructions of Thermakraft Industries (NZ) Ltd.

16.5 Quality of installation is the responsibility of the installer in accordance with the instructions of Thermakraft Industries (NZ) Ltd.

Sources of Information

- AS/NZS 2904: 1995 Damp-proof courses and flashings.
- AS/NZS 4347 Damp-proof courses and flashings - Methods of test.
- NZS 3604: 1999 Timber Framed Buildings.
- NZS 4229: 1999 Concrete masonry buildings not requiring specific engineering design.
- Compliance Document for the New Zealand Building Code External Moisture Clause E2, Department of Building and Housing, Third Edition July 2005.
- Ministry of Business, Innovation and Employment Record of Amendments for Compliance Documents and Handbooks.
- The Building Regulations 1992.

Amendments

Amendment No. 1, dated 30 August 2013.

This Appraisal has been amended to update clause changes as required by the introduction of NZBC Fire Clauses C1 – C6 Protection from Fire and A3 Building Importance Levels.

Readers are advised to check the validity of this Appraisal by referring to the Valid Appraisals listing on the BRANZ website, or by contacting BRANZ.

BRANZ

In the opinion of BRANZ, Supercourse 500 Damp-Proof Course and Concealed Flashing is fit for purpose and will comply with the Building Code to the extent specified in this Appraisal provided it is used, designed, installed and maintained as set out in this Appraisal.

The Appraisal is issued only to Thermakraft Industries (NZ) Ltd, and is valid until further notice, subject to the Conditions of Appraisal.

Conditions of Appraisal

1. This Appraisal:
   a) relates only to the product as described herein;
   b) must be read, considered and used in full together with the Technical Literature;
   c) does not address any Legislation, Regulations, Codes or Standards, not specifically named herein;
   d) is copyright of BRANZ.
2. Thermakraft Industries (NZ) Ltd:
   a) continues to have the product reviewed by BRANZ;
   b) shall notify BRANZ of any changes in product specification or quality assurance measures prior to the product being marketed;
   c) abides by the BRANZ Appraisals Services Terms and Conditions.
   d) Warrants that the product and the manufacturing process for the product are maintained at or above the standards, levels and quality assessed and found satisfactory by BRANZ pursuant to BRANZ's Appraisal of the product.
3. BRANZ makes no representation or warranty as to:
   a) the nature of individual examples of, batches of, or individual installations of the product, including methods and workmanship;
   b) the presence or absence of any patent or similar rights subsisting in the product or any other product;
   c) any guarantee or warranty offered by Thermakraft Industries (NZ) Ltd.
4. Any reference in this Appraisal to any other publication shall be read as a reference to the version of the publication specified in this Appraisal.
5. BRANZ provides no certification, guarantee, indemnity or warranty, to Thermakraft Industries (NZ) Ltd or any third party.

For BRANZ

P Robertson
Chief Executive

Date of Issue:
23 September 2005

Readers are advised to check the validity of this Appraisal by referring to the Valid Appraisals listing on the BRANZ website, or by contacting BRANZ.

scyon® SECURA™ INTERIOR FLOORING

Installation Manual

FEBRUARY 2013 I NEW ZEALAND

James Hardie® a smarter way™

Content

1 INTRODUCTION 3
Product Description 4
Accessories 4
2 SAFE WORKING PRACTICES 5
3 DESIGN 6
3.1 General 6
3.2 Loading Consideration 6
3.3 Framing 6
3.4 Sub Floor Ventilation 7
3.5 Fastener Durability 7
4 SCYON SECURA INTERIOR FLOORING INSTALLATION 7
4.1 Panel Layout 7
4.2 Installation Steps 7
4.3 Control Joints 8
4.4 Preformed Trays and Bases 9
5 WATERPROOFING MEMBRANE 10
6 FINISHES 11
6.1 General 11
6.2 Preparation 11
6.3 Vinyl 11
6.4 Screeds 11
6.5 Selection of Tiles 11
6.6 Tile Adhesives 11
6.7 Tiling 11
6.8 Tiling Practice 11
7 MAINTENANCE 11
8 PRODUCT INFORMATION 12
8.1 General 12
8.2 Product Mass 12
8.3 Durability 12
8.4 Fire Properties 12
PRODUCT WARRANTY 15

WE VALUE YOUR FEEDBACK

To continue with the development of our products and systems, we value your input. Please send any suggestions, including your name, contact details, and relevant sketches to:

Ask James Hardie™
Fax 0800 808 988
literaturefeedback@jameshardie.co.nz

1 Introduction

Scyon® Secura™ Interior Flooring is a substrate which has been specifically engineered for use in internal wet and dry areas such as bathrooms, toilets and laundries to overlay with tiles, heavy grade vinyl or carpeting. Scyon Secura Interior Flooring provides a durable, stable and moisture resistant substrate.

Scyon Secura Interior Flooring is manufactured using James Hardie's unique Scyon advanced lightweight fibre cement composite technology, making it easier to cut and gun nail.

Scyon Secura Interior Flooring is a 19mm thick structural tongue and groove flooring which is an alternative to timber, particle board or plywood flooring. It's lighter than traditional James Hardie 18mm HardiePanel™ Compressed Sheet thus making it easier to handle and install.

The 19mm thickness and tongue and groove joining means Scyon Secura Interior Flooring is compatible with other 19mm flooring products on the market and eliminates the need for timber blocking along the tongue and groove joint. The moisture-resistant sealer on all six sides combined with the high strength Scyon® technology makes it suitable for use in wet and dry areas. Tiles and heavy grade vinyl linings can be directly fixed to this substrate without the need for an underlay sheet.

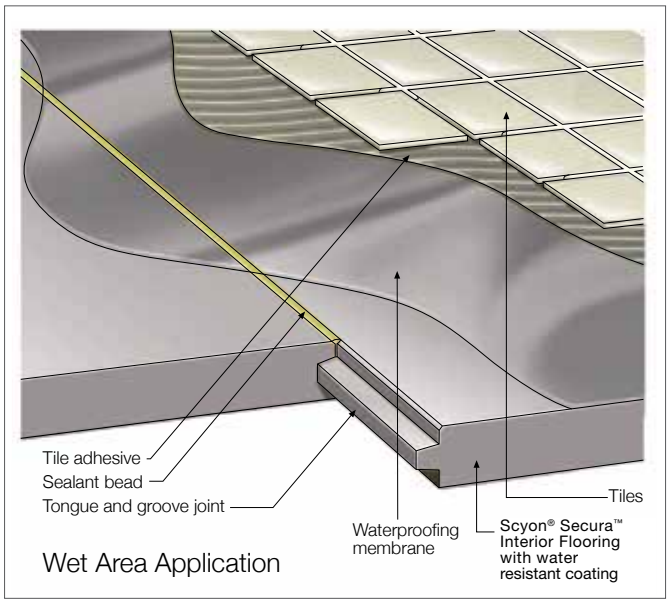

The specifier or other responsible party for the project must ensure the information and details in this manual are appropriate for the intended application and specific design and detailing is undertaken for areas which fall outside the scope of this documentation. This manual must be read in conjunction with the New Zealand Building Code (NZBC) and other relevant standards/regulations relating to wet/dry area construction.

Note: Scyon Secura Interior Flooring is not suitable for exterior flooring applications.

Scope

This installation manual covers the use of Scyon Secura Interior Flooring in wet and dry areas of buildings within the scope of NZS 3604 or specific engineering design (SED) projects where the loading concentrations do not exceed those specified in NZS 3604 or mentioned in section 3.2.

Make sure your information is up to date

When specifying or installing James Hardie products, ensure you have the current manual. If you're not sure you do, or you need more information, visit www.jameshardie.co.nz or Ask James Hardie™ on 0800 808 868.

Table 1

James Hardie product information			
Product	**Description**	**Size (MM)**	**Code**
	A structural flooring product sealed on all six sides for both tiled or heavy grade vinyl covered internal wet area flooring applications Long edges have a tongue and groove for easy jointing across the joists. **Tiled applications:** Install sheet with label 'This side down for Tiles' facing down **Vinyl or Carpet applications:** Install sheet with label 'This side UP for Vinyl' facing up	2700 x 600	**404260**

All dimensions provided are approximate only and subject to manufacturing tolerances

Table 2

Accessories supplied by James Hardie		
Accessories	**Description**	**Code**
	HardieBlade™ Saw Blade HardieBlade Saw Blade 185mm diameter Used to cut Scyon Secura Interior Flooring	**300660**

Accessories not supplied by James Hardie			
James Hardie recommends the following products for use in conjunction with its flooring products. James Hardie does not supply these products and does not provide a warranty for their use. Please contact the component manufacturer for information on their warranties and further information on their products.			
Accessories	**Description**	**Accessories**	**Description**
	Backing rod PEF backing rod to be used with sealant in control joints.		**Waterproofing membrane** Used over the Scyon Secura Interior Flooring in wet areas. Use the recommended products and applications. Refer table 4.
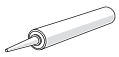	**Sealant** Sealant used in v joint in tiled applications, Ensure the sealant is compatible with the waterproofing membrane system selected.	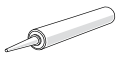	**Adhesive** Adhesive used over joists prior to installation of Scyon Secura Interior Flooring. Bostik Seal 'n' Flex 1 Sika Sikaflex 11FC Holdfast 220LM
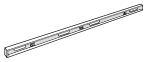	**Level/straight edge** For checking straightness of underlying flooring.	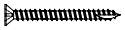	**Screws for timber** 10g x 40mm wood thread self embedding screws.
	Paslode Impulse FrameMaster or **Paslode Pneumatic Nailer**		**Screws for steel** 8-10g x 40-45mm wing tek min. class 3 coating.
			50 x 2.87mm stainless steel ring RounDrive nail 50 x 2.87mm Dekfast HD galvanised RounDrive nail

2 Safe working practices

WARNING – DO NOT BREATHE DUST AND CUT IN A WELL VENTILATED AREA

James Hardie products contain sand, a source of respirable crystalline silica which is considered by some international authorities to be a cause of cancer from some occupational sources. Breathing excessive amounts of respirable silica dust can also cause a disabling and potentially fatal lung disease called silicosis, and has been linked with other diseases. Some studies suggest smoking may increase these risks. During installation or handling: (1) work in outdoor areas with ample ventilation; (2) minimise dust when cutting by using a HardieBlade™ Saw Blade and dust-reducing circular saw attached to a HEPA vacuum; (3) warn others in the immediate area to avoid breathing dust; (4) wear a properly-fitted, approved dust mask or respirator (e.g P1 or P2) in accordance with applicable government regulations and manufacturer instructions to further limit respirable silica exposures. During clean-up, use HEPA vacuums or wet cleanup methods - never dry sweep. For further information, refer to our installation instructions and Safety Data Sheets available at www.jameshardie.co.nz.

FAILURE TO ADHERE TO OUR WARNINGS, SAFETY DATA SHEETS, AND INSTALLATION INSTRUCTIONS MAY LEAD TO SERIOUS PERSONAL INJURY OR DEATH.

James Hardie recommended safe working practices
CUTTING OUTDOORS
1. Position cutting station so that wind will blow dust away from user or others in working area. 2. Use the following method to cut Scyon Secura Interior Flooring: **BEST** • Dust reducing circular saw equipped with HardieBlade™ Saw Blade and HEPA vacuum extraction. **GOOD** • Dust reducing circular saw with HardieBlade™ Saw Blade.
SANDING/DRILLING/OTHER MACHINING
When sanding, drilling or machining you should always wear a P1 or P2 dust mask and warn others in the immediate area.
IMPORTANT NOTES:
1. For maximum protection (lowest respirable dust production), James Hardie recommends always using “Best” - level cutting methods where feasible. 2. NEVER use a power saw indoors 3. NEVER use a circular saw blade that does not carry the HardieBlade logo 4. NEVER dry sweep - Use wet suppression or HEPA Vacuum 5. NEVER use grinders 6. ALWAYS follow tool manufacturer’s safety recommendations
P1 or P2 respirators can be used in conjunction with above cutting practices to further reduce dust exposures. Additional exposure information is available at www.jameshardie.co.nz to help you determine the most appropriate cutting method for your job requirements. If concern still exists about exposure levels or you do not comply with the above practices, you should always consult a qualified industrial hygienist or contact James Hardie for further information.

3 Design

Working instructions

Refer to recommended Safe Working Practices before starting any cutting or machining of product.

HardieBlade Saw Blade

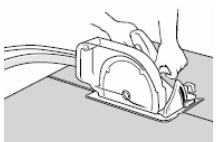

The HardieBlade Saw Blade used with a dust-reducing saw and HEPA vacuum extraction allows for fast, clean cutting of Scyon Secura Interior Flooring. A dust-reducing saw uses a dust deflector or a dust collector connected to a vacuum system. When sawing, clamp a straight-edge to the sheet as a guide and run the saw base plate along the straight edge when making the cut.

Hole-Forming

For smooth clean cut circular holes:
Mark the centre of the hole on the sheet. Pre-drill a 'pilot' hole.

Using the pilot hole as a guide, cut the hole to the appropriate diameter with a hole saw fitted to a heavy duty electric drill.

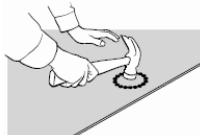

For irregular holes:
Small rectangular or circular holes can be cut by drilling a series of small holes around the perimeter of the hole then tapping out the waste piece from the sheet face.

Tap carefully to avoid damage to sheets, ensuring that the sheet edges are properly supported.

Storage and handling

To avoid damage, all James Hardie building products should be stored with edges and corners of the sheets protected from chipping.

James Hardie building products must be installed in a dry state and protected from rain during transport and storage. The product must be laid flat under cover on a smooth level surface clear of the ground to avoid exposure to water, moisture, etc.

Quality

James Hardie conducts stringent quality checks to ensure that any product manufactured falls within our quality spectrum. It is the responsibility of the builder to ensure that the product meets aesthetic requirements before installation. James Hardie will not be responsible for rectifying obvious aesthetic surface variations following installation.

3.1 GENERAL

All construction must be carried out in accordance with the relevant building regulations and standards.

Prior to installation of Scyon Secura Interior Flooring, ensure the supporting framing is suitable and is in accordance with this manual.

A solvent free waterproofing membrane must be applied over the Scyon Secura Interior Flooring in internal wet areas prior to the installation of tiles.

3.2 LOADING CONSIDERATION

Scyon Secura Interior Flooring in this manual has been designed to satisfy the requirements for wet and dry areas for buildings within the scope of NZS 3604, 'Timber Framed Buildings', NASH 3405 'An Alternative Solution for Steel Framed Buildings' and load specified under domestic and residential activities of Table 3.1, (Category A) of AS/NZS 1170.1 'Structural Design Actions – Permanent, Imposed and Other Actions'.

Note: The Standard AS/NZS 1170 also specifies higher loads for areas in public buildings which are subject to crowd loading, storage of materials and heavy wheel loadings. For these applications James Hardie HardiePanel Compressed Sheet shall be used. Refer to Flooring Installation Manual.

If in doubt, contact your builder, designer or engineer or Ask James Hardie 0800 808 868.

Notes:

- Scyon Secura Interior Flooring must NOT to be used on concrete slabs. To build up height of concrete, purpose-made concrete levelling compounds are more suitable
- For tiling of walls use James Hardie Villaboard® Lining

3.3 FRAMING

3.3.1 Timber frame

Timber floor joists must either be in accordance with NZS 3604: 'Timber Framed Buildings' or be specifically designed as per NZS 3603 'Timber Structure Standard' considering the maximum loading specified in AS/NZS 1170 'Structural Design Actions' as explained above.

Floor joists must be 45mm minimum wide. The joist spacing must not exceed those given in Table 3.

Table 3

Scyon Secura Interior Flooring Fixing	
JOIST SPACING CENTRES (MAXIMUM)	**FASTENER MAXIMUM SPACING CENTRES**
450mm	200mm

In addition to any lateral support required, the floor joists must also be supported by continuous blocking or strutting as per section 7 of NZS 3604.

Moisture content in timber floor joists must not exceed 20% at the time of installation of Scyon Secura Interior Flooring.

For further timber treatment and allowable moisture content information refer to NZS 3602 'Timber and Wood-Based Products for use in Buildings' and NZS 3640 'Chemical Preservation of

Round Sawn Timber' for minimum timber treatment selection and treatment requirements. Also refer to framing manufacturer's literature for further guidance on timber selection. Framing must be protected from moisture on site in accordance with the recommendations of the framing manufacturers.

Note: Tiles, tile grouts and adhesives can be detrimentally affected by even small deflections. Therefore it is recommended that for tiled applications reduce joist spans by 20% as specified in NZS 3604.

3.3.2 Steel Frame

The use of steel framing must be in accordance with NASH 3405 Steel Frame Guide and the framing manufacturers' specifications. Framing members must be 0.75mm to 1.9mm BMT.

Steel frame must have appropriate level of coating to meet the durability requirement of Clause B2 of NZBC.

3.4 SUB FLOOR VENTILATION

Check that adequate ventilation exists under all framed floors (especially new floors) and that the sub floor area is free from dampness. Refer to NZS 3604 for ventilation requirements.

3.5 FASTENER DURABILITY

Fasteners must meet the minimum durability requirements of the NZBC.

Contact fastener manufacturers/suppliers for more information.

4 Scyon Secura Interior Flooring Installation

For floor joist spacing and sizes refer to Section 3.

4.1 PANEL LAYOUT

Scyon Secura Interior Flooring must always be installed across the floor joists with short sheet edges fully supported on joists. Scyon Secura Interior Flooring must be laid in staggered pattern. See Figure 1. No blocking is required under the tongue and groove joints.

When using the site cut sheet pieces, the minimum length of the cut sheet to be used must be 900mm or more.

Tile and Vinyl Applications.

The sheets are laid in a staggered pattern. Ensure the sheets are facing the correct way down depending on the final finish ie. tiles or vinyl.

Note:

1. Install sheet with label 'This side down for tiles' facing down.
2. Install sheet with label 'This side up for vinyl' facing up.

Figure 1: Sheet layout - tile and vinyl

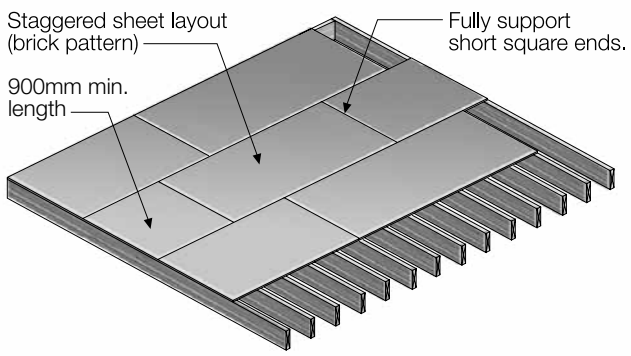

Being 19mm thick, Scyon Secura Interior Flooring can easily be combined with traditional particle board or plywood flooring substrates.

Fixings to be 50 x 2.87mm RounDrive nails at 200mm maximum centres. Refer Table 3.

4.2 Installation Steps

You must ensure the product is of acceptable quality prior to installation.

The sheet is multi-purpose and depending on the finish, ensure sheet is laid with correct face upwards for the final desired finish.

The Scyon Secura Interior Flooring must not be exposed to exterior elements for more than 90 days.

Figure 2: Fastener layout

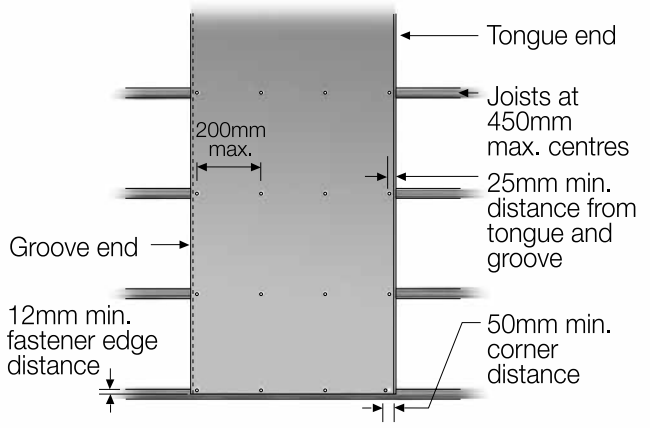

Figure 3: Construction adhesive

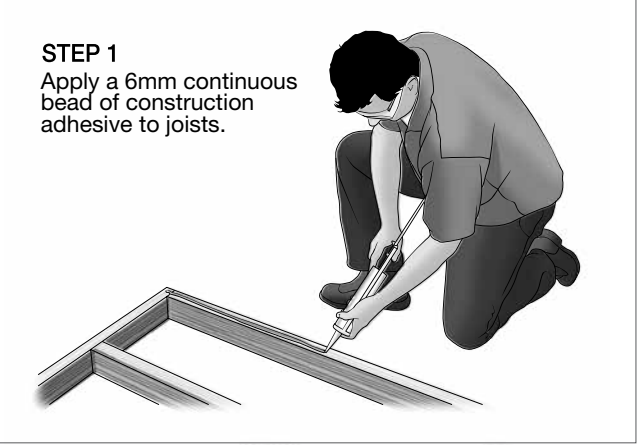

Figure 4: Fixing first panel.

Fixings to be 50 x 2.87mm RounDrive nails at 200mm maximum centres

Figure 5: Nailing second panel

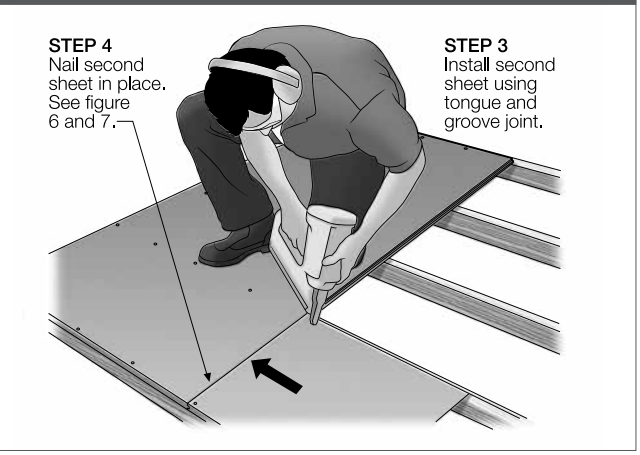

Figure 6: Sealing over fasteners - wet areas only

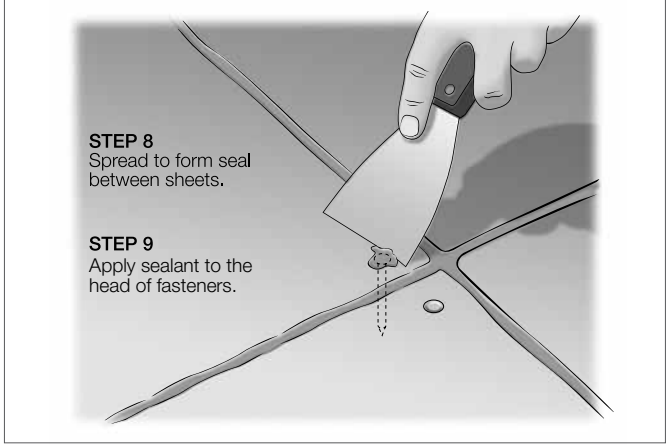

Figure 7: Butt joint internal wet areas - tile floor

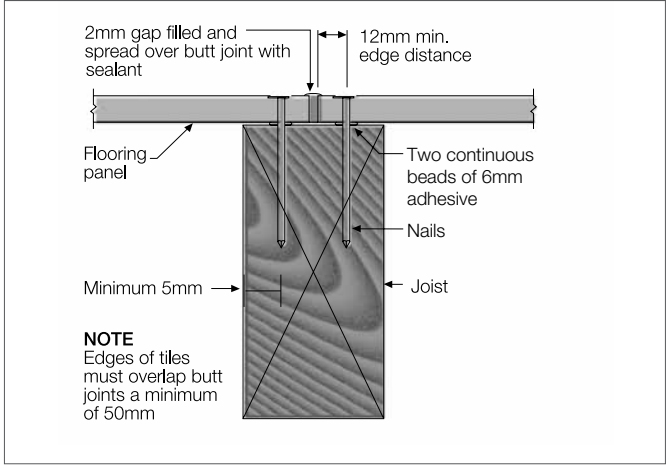

Figure 8: Butt joint internal dry/wet areas - vinyl floor

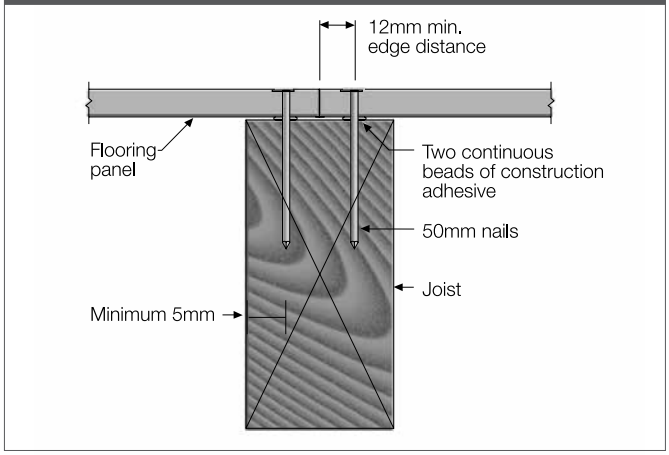

4.3 CONTROL JOINTS

4.3.1 Tiled Floors

Control joints in Scyon Secura Interior Flooring sheets and the tiles are required in wet and dry areas where floor dimensions exceed 4.05m in the long sheet direction and where existing structural joints are located. Position joints symmetrically about the centre of the floor as shown in Figure 9. Additional control joints in the tiles may be required, refer to the current Good Tiling Practice Guide by BRANZ for more information available at www.branz.co.nz.

Figure 9: Control joint layout

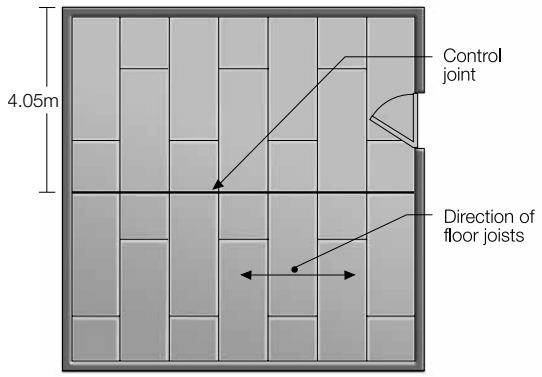

Also provide control joints where there are changes of direction, such as an L-shaped room, and at doorways where the tiled surface is carried through to the next room as shown in Figure 10.

Figure 10: L shaped room

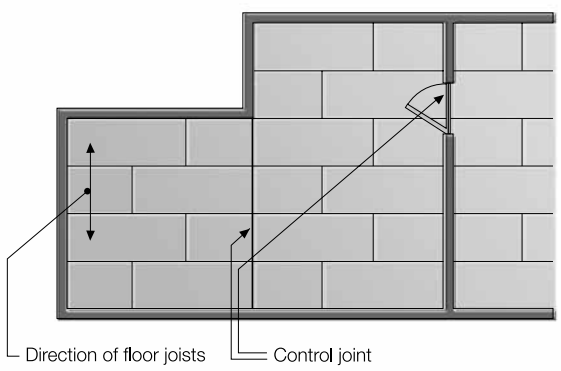

Place a 6-8mm diameter polyethylene backing rod in the bottom of the joint between the sheets and fill the joint with a suitable flexible sealant. All square edges must be fully supported as per Figure 11.

It is important that the control joints be carried through to the top of the floor surface i.e. they should not be covered OVER by tiles.

Note: No control joints are required in the flooring sheets when finishing with vinyl unless there is an existing structural joint or otherwise specified by relevant code and regulation.

Figure 11: Control joint

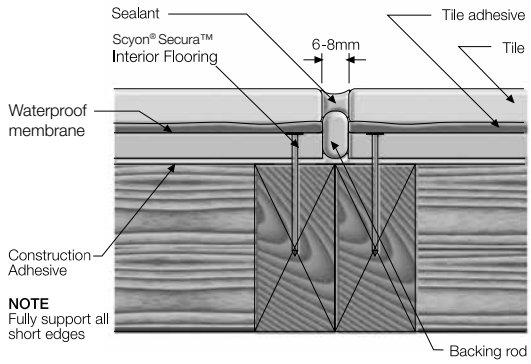

Figure 12 Tile control joint over tongue and groove joint

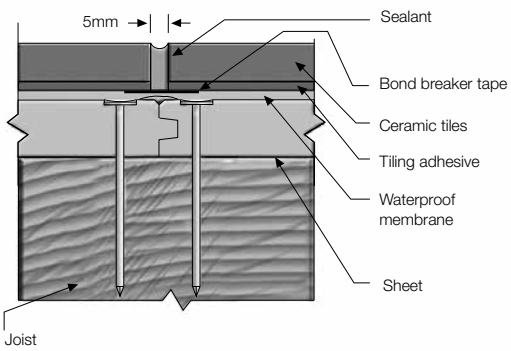

4.4 Preformed Trays and Bases

Preformed trays and bases must be installed to manufacturer's instructions.

Figure 13: Performed tray detail for Villaboard Lining to be tiled

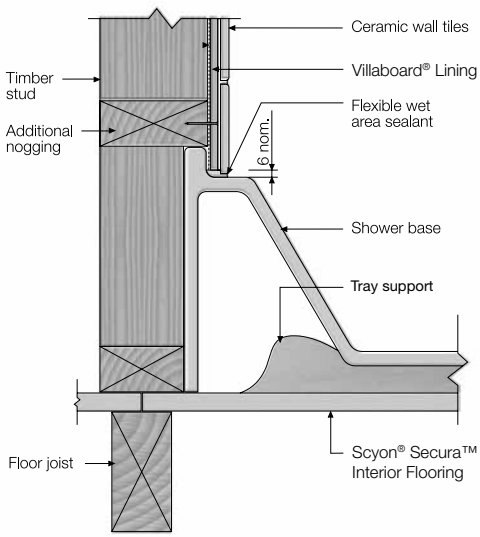

5 Waterproofing Membrane

All Scyon Secura Interior Flooring under showers (wet areas) must be waterproofed prior to tiling. Refer to clause E3 Internal Moisture of NZBC and AS 3740 for further guidance regarding the definition of wet areas.

All sheet fixing must be completed as per this installation manual before the primer and the solvent free waterproofing membrane is applied.

Ensure the sheet is dry and free from surface dust and dirt before applying the primer.

The primer and waterproof membrane can be applied directly over the flush nail heads. Ensure compatibility of sealants with waterproofing membranes.

Only water based waterproofing membranes/chemicals must be used with Scyon Secura Interior Flooring. Follow the manufacturer's instructions for coverage areas, and specific instructions. For suitable Waterproofing Manufacturers refer to Table 4.

Figure 14: Sealing around splash zones (showers)

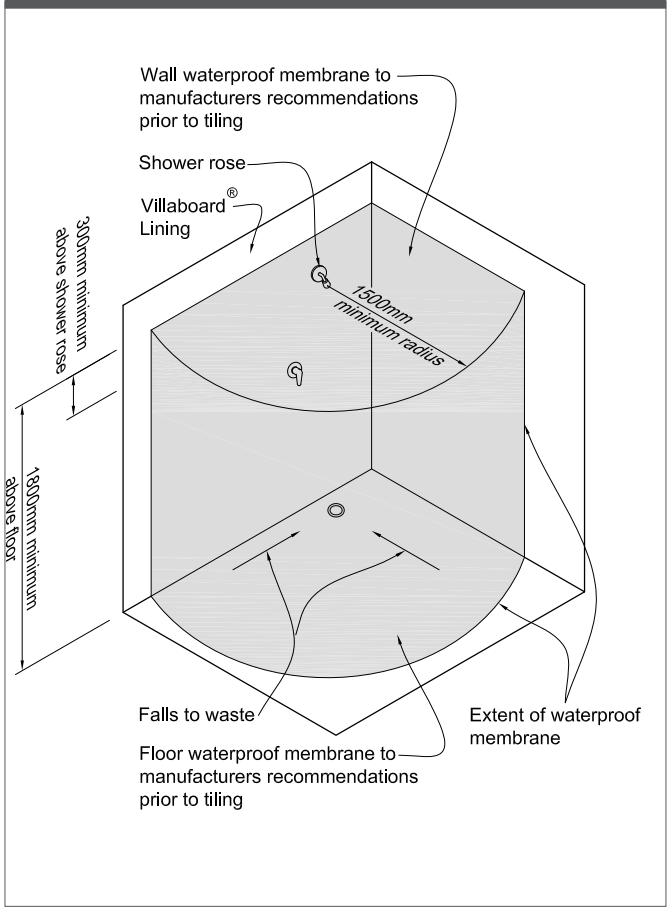

Prime sheet and apply coat of selected waterproof membrane with associated mesh as per waterproof manufacturers' recommendations.

Figure 15: Waterproofing floor to wall

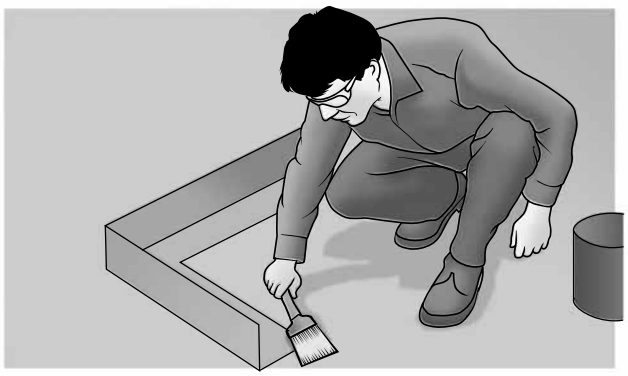

Figure 16: In-situ applied internal membrane

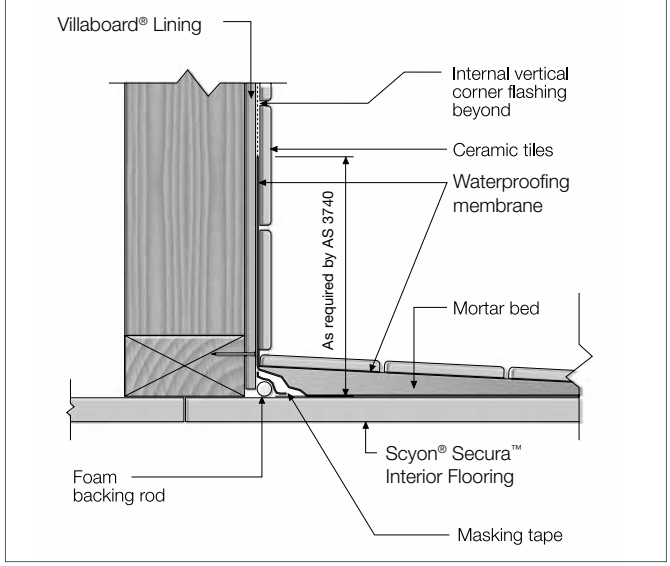

Table 4

Recommended waterproofing membranes/tile adhesives
ASA Waterproofing Membrane Dampfix 2 from Bostik
Mapegum WPS and Mapelastic from Mapei NZ Ltd.
Superflex® Ardex Liquid Membranes' from Ardex NZ Ltd
Flexi-Seal® from Flexco (NZ) Ltd
DuroSet™ and DuroQik™ from Waterproofing Systems Ltd

All waterproofing membranes specified above are water based membranes. Use only water based membranes over Scyon Secura Interior Flooring.

For coverage information of the selected waterproof membrane refer to manufacturer's recommendations.

Waterproofing membranes must be applied in accordance with their manufacturer's requirements.

Note: Refer to AS 3740 for further guidance on waterproofing requirements.

6 Finishes

6.1 GENERAL

James Hardie flooring must be finished with a suitable floor covering to suit the intended application. For the suitability and installation requirements of floor coverings, check with the manufacturer.

6.2 PREPARATION

Where minor height variations (3mm or less) occur at butt joints, these may be levelled out by filling with self levelling compounds eg. Ardex Feather Finish or equivalent. Ensure final finish is compatible with all components eg. vinyl adhesive with leveling compound.

Sanding of the Scyon Secura Interior Flooring is not recommended.

6.3 VINYL

As the sheets are supplied fully sealed, only water based vinyl adhesives must be used for this application.

Allow the adhesive to air dry before the vinyl is applied. Refer to a reputable vinyl manufacturer for suitable products and installation instructions.

6.4 SCREEDS

Where the application requires the flooring to have falls created, a mortar bed screed may be used. The surface of the flooring must be thoroughly clean and dry prior to applying the screed as per manufacturer's instructions. To prevent cracking of floor tiles, the mortar bed must be reinforced over all joints in flooring sheets.

6.5 SELECTION OF TILES

The following brief notes do not cover all aspects of tiling. Further advice should be sought from specialists in these areas.

The importance of choosing the proper tile for a given environment cannot be stressed enough. Manufacturer's catalogues indicate the recommended uses and limitations of their products and should be consulted when unsure.

6.6 TILE ADHESIVES

Because of possible differential movement between tiles and the Scyon Secura Interior Flooring only approved flexible adhesive and grouts must be used.

Refer to the adhesive manufacturers' specifications for sheet preparation before applying the flexible tile adhesive.

The recommended brands of waterproof membranes and tile adhesives are shown in Table 4. It is essential that all tile systems such as primers, waterproofing membranes, flexible adhesives and grouts are all supplied by the same manufacturer to ensure compatibility of products and warranty protection.

6.7 TILING

Tiles should be applied with proprietary adhesive that conform to AS 2358 and installed in accordance to AS 3958.1 and to tile and adhesive manufacturer recommendations. Use a flexible tile adhesive recommended for internal wet area applications and compatible with all other materials.

It is recommended that tiles are laid from the control joint out and the edges of tiles must overlap butt joints a minimum of 50mm.

Ensure the tile adhesive used is suitable and compatible with adjoining surfaces for the intended application.

Refer to the waterproofing and tile manufacture and relevant tiling standards for maximum tile control joint spacing, product suitability and compatibility including grout, tile adhesive, tile and waterproofing warranty and maintenance requirement.

The waterproofing requirements of AS 3740 and clause E3 NZBC must be met. Once Scyon Secura Interior Flooring has been fixed in place, install flooring material in accordance with manufacturer's specifications within three months of Scyon Secura Interior Flooring installation.

6.8 TILING PRACTICE

Refer to the selected tile manufacturer for complete details regarding the laying and fixing of the ceramic tiles, marble, slate and granite stone. Reference can also be made to the BRANZ publication "Good Tiling Practice" available at www.branz.co.nz.

7 Maintenance

Regular cleaning, checks and maintenance of the finished surface, joints, junctions, penetrations, sealant, grout etc must be carried out at regular intervals and as per manufacturers' recommendations.

Maintain waterproofing membranes to meet the objectives of Clause B2 of NZBC and as per the requirements of the relevant component manufacturer.

8 Product information

8.1 GENERAL

Scyon Secura Interior Flooring is an advanced lightweight cement composite building product. The basic composition is Portland cement, ground sand, cellulose fibre and water.

Scyon Secura Interior Flooring is manufactured to AS/NZS 2908.2 'Cellulose- Cement Products Part 2: Flat Sheets' (ISO 8336 'Fibre Cement Flat Sheets').

Scyon Secura Interior Flooring is a classified Type B, Category 2 in accordance with AS/NZS 2908.2 'Cellulose-Cement Products'.

8.2 PRODUCT MASS

Based on equilibrium moisture content the approximate mass of:

- Scyon Secura Interior Flooring is 24.5kg/m^2.

8.3 DURABILITY

Resistance to moisture/rotting

Scyon Secura Interior Flooring has demonstrated resistance to permanent moisture induced deterioration (rotting) by having passed the following tests in accordance with AS/NZS 2908.2:

- Water permeability (Clause 8.2.2)
- Warm water (Clause 8.2.4)
- Heat rain (Clause 6.5)
- Soak dry (Clause 8.2.5)

8.4 FIRE PROPERTIES

Scyon Secura Interior Flooring is deemed to be non-combustible.

Scyon Secura Interior Flooring has been tested by CSIRO and are classified as a Group 1 material.

Scyon Secura Interior Flooring has the following early fire hazard indices (tested to AS 1530 Part 3).

Early fire hazard indicies	
Flammability (FI)	0
Spread of Flame Index (SFD)	0
Heat evolved index	0
Smoke developed index (SDI)	0 - 1

Notes

Notes

Product Warranty

scyon SECURA™ INTERIOR FLOORING

February 2013

Warranty: James Hardie New Zealand ("James Hardie") warrants for a period of 15 years from the date of purchase that the Scyon Secura Interior Flooring (the "Product"), will be free from defects due to defective factory workmanship or materials and, subject to compliance with the conditions below, will be resistant to cracking, rotting, fire and damage from termite attacks to the extent set out in James Hardie's relevant published literature current at the time of installation. James Hardie warrants for a period of 12 months from the date of purchase that the accessories supplied by James Hardie will be free from defects due to defective factory workmanship or materials.

Nothing in this document shall exclude or modify any legal rights a customer may have under the Consumer Guarantees Act or otherwise which cannot be excluded or modified at law.

CONDITIONS OF WARRANTY:

The warranty is strictly subject to the following conditions:

a) James Hardie will not be liable for breach of warranty unless the claimant provides proof of purchase and makes a written claim either within 30 days after the defect would have become reasonably apparent or, if the defect was reasonably apparent prior to installation, then the claim must be made prior to installation;

b) this warranty is not transferable;

c) the Product must be installed and maintained strictly in accordance with the relevant James Hardie literature current at the time of installation and must be installed in conjunction with the components or products specified in the literature. Further, all other products, including coating and jointing systems, applied to or used in conjunction with the Product must be applied or installed and maintained strictly in accordance with the relevant manufacturer's instructions and good trade practice;

d) the project must be designed and constructed in strict compliance with all relevant provisions of the current NZBC, regulations and standards;

e) the claimant's sole remedy for breach of warranty is (at James Hardie's option) that James Hardie will either supply replacement product, rectify the affected product or pay for the cost of the replacement or rectification of the affected product;

f) James Hardie will not be liable for any losses or damages (whether direct or indirect) including property damage or personal injury, consequential loss, economic loss or loss of profits, arising in contract or negligence or howsoever arising. Without limiting the foregoing James Hardie will not be liable for any claims, damages or defects arising from or in any way attributable to poor workmanship, poor design or detailing, settlement or structural movement and/or movement of materials to which the Product is attached, incorrect design of the structure, acts of God including but not limited to earthquakes, cyclones, floods or other severe weather conditions or unusual climatic conditions, efflorescence or performance of paint/coatings applied to the Product, normal wear and tear, growth of mould, mildew, fungi, bacteria, or any organism on any Product surface or Product (whether on the exposed or unexposed surfaces);

g) all warranties, conditions, liabilities and obligations other than those specified in this warranty are excluded to the fullest extent allowed by law;

h) if meeting a claim under this warranty involves re-coating of Products, there may be slight colour differences between the original and replacement Products due to the effects of weathering and variations in materials over time.

Disclaimer: The recommendations in James Hardie's literature are based on good building practice, but are not an exhaustive statement of all relevant information and are subject to conditions (c), (d), (f) and (g) above. James Hardie has tested the performance of the Scyon Secura Interior Flooring when installed in accordance with the Scyon Secura Interior Flooring Installation Manual, in accordance with the standards and verification methods required by the NZBC and those test results demonstrate the product complies with the performance criteria established by the NZBC. However, as the successful performance of the relevant system depends on numerous factors outside the control of James Hardie (e.g. quality of workmanship and design) James Hardie shall not be liable for the recommendations made in its literature and the performance of the relevant system, including its suitability for any purpose or ability to satisfy the relevant provisions of the NZBC, regulations and standards, as it is the responsibility of the building designer to ensure that the details and recommendations provided in the relevant James Hardie installation manual are suitable for the intended project and that specific design is conducted where appropriate.

Copyright February 2013. © James Hardie New Zealand. TM and ® denotes a Trademark or Registered Mark owned by James Hardie Technology Limited.

Ask James Hardie™
Call 0800 808 868
www.jameshardie.co.nz

James Hardie
a smarter way™

scyon®

The culmination of years of innovative research and development, Scyon's® resilient makeup challenges conventional building methods in a range of steadfast products. James Hardie® are committed to the sustainable production of building products for a tougher and greener tomorrow.

For more information about performance, installation, warranties and warnings visit **scyon.co.nz**

© 2013 James Hardie New Zealand. ™ and ® denote a trademark owned by James Hardie Technology Limited.

James Hardie®
a smarter way™

BRANZ Appraised

Appraisal No.611 [2011]

BRANZ Appraisals

Technical Assessments of products for building and construction

BRANZ APPRAISAL No. 611 (2011)

This Appraisal replaces BRANZ Appraisal No. 611 (2008)

Amended 15 December 2014

JAMES HARDIE RIGID AIR BARRIERS

James Hardie New Zealand
PO Box 12-070
Penrose
Auckland

Tel: 0800 808 868
Fax: 0800 808 988
Web: www.jameshardie.co.nz

BRANZ
BRANZ Limited
Private Bag 50 908
Porirua City
New Zealand
Tel: +64 4 237 1170
Fax: +64 4 237 1171
www.branz.co.nz

WFTAO

Product

1.1 James Hardie Rigid Air Barriers are a range of rigid wall underlay materials including RAB® Board and HomeRAB® Pre-Cladding. They are sealed fibre cement sheets designed for use as rigid wall underlay behind wall cladding systems. HomeRAB® Pre-Cladding and RAB® Board are manufactured using a medium density fibre cement formulation.

Scope

2.1 HomeRAB® Pre-Cladding has been appraised for use as a rigid wall underlay and temporary weather-protecting sheathing on timber framed buildings within the following scope:

- the scope limitations of NZBC Acceptable Solution E2/AS1, Paragraph 1.1 with regards to building height and floor plan area; and,
- with absorbent wall claddings directly fixed to framing; and,
- with non-absorbent wall claddings directly fixed to framing with a flexible wall underlay over the HomeRAB® Pre-Cladding; and,
- with absorbent and non-absorbent wall claddings installed over an 18 mm minimum drained cavity; and,
- with masonry veneer in accordance with NZBC Acceptable Solution E2/AS1; and,
- situated in NZS 3604 Wind Zones up to, and including Very High.

2.2 RAB® Board has been appraised for use as a rigid wall underlay and temporary weather-protecting sheathing on timber framed buildings within the following scope:

- the scope limitations of NZBC Acceptable Solution E2/AS1, Paragraph 1.1 with regards to building height and floor plan area; and,
- Importance level I to V buildings as defined in AS/NZS 1170; and,
- constructed with timber framing, or timber frame infill complying with the NZBC; and,
- with absorbent wall claddings directly fixed to framing; and,
- with non-absorbent wall claddings directly fixed to framing with a flexible wall underlay over the RAB® Board; and,
- with absorbent and non-absorbent wall claddings installed over an 18 mm minimum drained cavity; and,
- with masonry veneer in accordance with NZBC Acceptable Solution E2/AS1; and,
- when used in conjunction with wall cladding systems subjected to maximum wind pressures for structural and weathertightness design of 1.0 kPa Serviceability Limit State (SLS) and 1.5 kPa Ultimate Limit State (ULS) where studs are at maximum 600mm centres, and 3.0 kPa SLS and 4.5 kPa ULS where studs are at maximum 400 mm centres.

2.3 All buildings outside the scope of NZBC Acceptable Solution E2/AS1 incorporating RAB® Board must be subject to specific engineering and weathertightness design. Building designers are responsible for the frame design and for the incorporation of RAB® Board into their design in accordance with the instructions of James Hardie New Zealand.

(Note: James Hardie Rigid Air Barriers can be used to provide structural bracing. RAB® Board can also be used in fire resistance rated construction. These aspects have not been assessed by this Appraisal and are outside its scope.)

Readers are advised to check the validity of this Appraisal by referring to the Valid Appraisals listing on the BRANZ website, or by contacting BRANZ.

Building Regulations

New Zealand Building Code (NZBC)

3.1 In the opinion of BRANZ, James Hardie Rigid Air Barriers, if used, designed, installed and maintained in accordance with the statements and conditions of this Appraisal, will meet, or contribute to meeting the following provisions of the NZBC:

Clause B1 STRUCTURE: Performance B1.3.1, B1.3.2 and B1.3.4. James Hardie Rigid Air Barriers meet the requirements for loads arising from earthquake and wind [i.e. B1.3.3 (f) and (h)]. See Paragraphs 8.1 - 8.5.

Clause B2 DURABILITY: Performance B2.3.1(a), not less than 50 years, B2.3.1(b), 15 years and B2.3.2. James Hardie Rigid Air Barriers meet these requirements. See Paragraphs 9.1 - 9.3.

Clause E2 EXTERNAL MOISTURE: Performance E2.3.2. When used as part of the cladding system, James Hardie Rigid Air Barriers will contribute to meeting this requirement. See Paragraphs 12.1 and 12.2.

Clause F2 HAZARDOUS BUILDING MATERIALS: Performance F2.3.1. James Hardie Rigid Air Barriers meet this requirement and will not present a health hazard to people.

3.2 RAB® Board is an Acceptable Solution rigid wall underlay material in terms of compliance with NZBC Acceptable Solution E2/AS1, Table 23. This is an Appraisal of an Alternative Solution in terms of rigid wall underlay material for HomeRAB® Pre-Cladding and an Alternative Solution installation method for both products in terms of the New Zealand Building Code compliance.

Technical Specification

4.1 System components and accessories for James Hardie Rigid Air Barriers, which are supplied by James Hardie New Zealand are:

HomeRAB® Pre-Cladding

- HomeRAB® Pre-Cladding is a 4.5 mm thick fibre cement sheet, manufactured from a cellulose fibre cement formulation. It is produced in sheet material form with 'HomeRAB' printed on the front face. The sheets are formed, cut to length, and then cured by high pressure autoclaving. The sheet is coated on the front face and four edges with a green tinted water repellent sealer.
- HomeRAB® Pre-Cladding is available in sizes of 1200 mm wide and 2450 and 2750 mm long. It is manufactured to conform to the requirements of AS/NZS 2908.2.

RAB® Board

- RAB® Board is a 6.0 mm thick fibre cement sheet, manufactured from a cellulose fibre cement formulation. It is produced in sheet material form. The sheets are formed, cut to length, and then cured by high pressure autoclaving. The sheet is coated on the front face and four edges with a green tinted water repellent sealer.
- RAB® Board is available in sizes of 1200 mm wide and 2450 and 3000 mm long. It is manufactured to conform to the requirements of AS/NZS 2908.2.

Accessories

- HomeRAB® Pre-Cladding and RAB® Board horizontal flashings - uPVC, available in 3000 mm lengths.
- Inseal® 3259 joint sealing tape - black, compressible, medium density PVC (Polyvinyl Chloride) closed cell foam. The foam is coated on one side with pressure sensitive acrylic adhesive and the other face is covered by a silicone release paper. The tape is 1.5 mm thick and is supplied in rolls 50 and 80 mm wide and 50 m long.

4.2 System components and accessories for James Hardie Rigid Air Barriers, which are supplied by the building contractor are:

- Joint sealing tape and flexible sill and jamb flashing tape system - 3M™ All Weather Flashing Tape 8067 (3M New Zealand Ltd), Protecto Sill (Marshall Innovations Ltd), and Super-Stick (Marshall Innovations Ltd).
- HomeRAB® Pre-Cladding and RAB® Board sheet fixing – gun driven 50 x 2.8 mm hot-dip galvanised or ring shank stainless steel round head nails, or hand driven 40 x 2.8 mm hot-dip galvanised or ring shank stainless steel HardieFlex™ nails. *(Note: Hot-dip galvanising must comply with AS/NZS 4680 and stainless steel must be Grade 304 or 316.)*

Handling and Storage

5.1 Handling and storage of all materials supplied by James Hardie New Zealand or the building contractor, whether on site or off site, is under the control of the building contractor. James Hardie Rigid Air Barriers must be stacked flat, off the ground and supported on a level platform. They must be kept dry at all times either by storing under cover or providing waterproof covers to the stack. Care must be taken to avoid damage to edges, ends and surfaces. The sheathing must always be carried on edge. uPVC flashings and jointers must be protected from direct sunlight and physical damage, and should be stored flat and under cover.

5.2 Other accessories must be stored so they are kept clean, dry and undamaged.

Technical Literature

6.1 Refer to the Appraisals listing on the BRANZ website for details of the current Installation Manual for James Hardie Rigid Air Barriers. The Installation Manual must be read in conjunction with this Appraisal. All aspects of design, use, installation and maintenance contained in the Installation Manual and within the scope of this Appraisal must be followed.

Design Information

Framing

Timber Treatment

7.1 Timber wall framing behind James Hardie Rigid Air Barriers must be treated as required by NZBC Acceptable Solution B2/AS1.

Timber Framing

7.2 For HomeRAB® Pre-Cladding installations, timber framing must comply with NZS 3604 for buildings or parts of buildings within the scope limitations of NZS 3604. Buildings or parts of buildings outside the scope of NZS 3604 must be to a specific design in accordance with NZS 3603 and AS/NZS 1170. Where specific design is required, the framing must be of at least equivalent stiffness to the framing provisions of NZS 3604. In all cases studs must be at maximum 600 mm centres. Dwangs must be fitted flush between the studs at maximum 1200 mm centres. *(Note: The timber framing must also be suitable for the selected wall cladding. Refer to the selected cladding system's Technical Literature for specific framing requirements.)*

7.3 For RAB® Board installations, timber framing must comply with NZS 3604 for buildings or parts of buildings within the scope limitations of NZS 3604. Buildings or parts of buildings outside the scope of NZS 3604 must be to a specific design in accordance with NZS 3603 and AS/NZS 1170 considering local factors. In all cases studs must be at maximum 600 mm centres for buildings situated in wind pressures up to 1.5 kPa ULS, and at maximum 400 mm centres for buildings situated in wind pressures greater than 1.5 kPa ULS up to 4.5 kPa ULS. Dwangs must be fitted flush between the studs at maximum 1200 mm centres. *(Note: The timber framing must also be suitable for the selected wall cladding. Refer to the selected cladding system's Technical Literature for specific framing requirements.)*

7.4 Timber wall framing where James Hardie Rigid Air Barriers are joined must be nominal 50 mm width (i.e. 45 mm minimum finished width).

7.5 Timber framing must not have a maximum moisture content higher than 20% at the time of the James Hardie Rigid Air Barriers installation. *(Note: If James Hardie Rigid Air Barriers are fixed to framing with a moisture content of greater than 20% problems may occur at a later date due to excessive timber shrinkage.)*

James Hardie Rigid Air Barriers Set Out

7.6 James Hardie Rigid Air Barriers must be installed vertically. At the base of the wall, the sheet must hang below the bottom plate a minimum of 15 mm, up to a maximum of 40 mm.

7.7 In all cases, HomeRAB® Pre-Cladding and RAB® Board sheet edges must be supported and fixed to the wall framing

General

7.8 James Hardie Rigid Air Barriers are intended for use as rigid wall underlays fixed over timber framed walls in order to support wind pressures, and to act as a secondary barrier to wind-driven rain.

Temporary Weather Protection

7.9 Commencing from installation, James Hardie Rigid Air Barriers must not be exposed to the weather for more than 90 days.

7.10 James Hardie Rigid Air Barriers may be used as a temporary weather protecting sheathing to allow the insulation and internal lining of the building to proceed before the wall cladding is installed. To achieve temporary weathertightness, all joints, internal and external corners of the James Hardie Rigid Air Barriers must be sealed, the roof cladding and soffit linings must be installed, the flexible sill and jamb flashing tape system must be installed around the window and door openings, and the window and door joinery must be installed complete with head flashings and airseals. The timber wall framing must have a maximum moisture content as specified by the internal lining system supplier at the time of the insulation installation and internal lining application.

7.11 James Hardie Rigid Air Barriers are suitable for use under wall claddings as a rigid wall underlay as called up in NZBC Acceptable Solution E2/AS1, Table 23, except that non-absorbent claddings must not be installed directly over the James Hardie Rigid Air Barriers.

Where a direct fixed non-absorbent wall cladding is used, the James Hardie Rigid Air Barrier must be overlaid with a flexible wall underlay complying with NZBC Acceptable Solution E2/AS1, Table 23 before cladding commences. Refer to Table 1 for the NZBC Acceptable Solution E2/AS1, Table 23 properties for James Hardie Rigid Air Barriers.

Table 1: NZBC E2/AS1 Table 23 Requirements

NZBC E2/AS1 Table 23 Rigid Wall Underlay Properties	Property Performance Requirement	James Hardie Rigid Air Barriers Actual Property Performance
Vapour Resistance	< 7 MN s/g	0.6 MN s/g
Water Resistance	> 20 mm	Pass

Structure

Mass

8.1 The mass of HomeRAB® Pre-Cladding is approximately 6.5 kg/m^2 at equilibrium moisture content. The mass of RAB® Board is approximately 8.6 kg/m^2 at equilibrium moisture content. This mass must be added to the selected wall cladding system mass when determining the overall wall cladding mass in terms of NZS 3604.

Wind Zones

8.2 HomeRAB® Pre-Cladding is suitable for use in all Wind Zones of NZS 3604, up to, and including, Very High. The sheets must be fixed at centres as specified in Table 2. The fixings must be positioned a minimum of 12 mm from all sheet edges, and a minimum of 50 mm horizontally and 75 mm vertically from sheet corners. The fastener heads must finish flush with the sheet surface.

Table 2: HomeRAB® Pre-Cladding Fixing Centres

NZS 3604 Wind Zone	Framing Set Out	HomeRAB® Pre-Cladding Nailing Centres to Studs, Plates and Dwangs
Low, Medium, High and Very High	Studs at 600 mm centres maximum and dwangs at 1200 mm centres	200 mm

8.3 RAB® Board is suitable for use in design wind pressures up to and including 4.5 kPa ULS when used in conjunction with wall cladding systems able to resist the same face load pressures. The sheets must be fixed at centres as specified in Table 3. The fixings must be positioned a minimum of 12 mm from all sheet edges, and a minimum of 50 mm horizontally and 75 mm vertically from sheet corners. The fastener heads must finish flush with the sheet surface.

Table 3: RAB® Board Fixing Centres

Wind Pressure	Framing Set Out	RAB® Board Nailing Centres to Studs, Plates and Dwangs
≤ 1.5 kPa ULS (NZS 3604 Wind Zone Very High)	Studs at 600 mm centres and dwangs at 1200 mm	200 mm
> 1.5 kPa ULS and ≤ 4.5 kPa ULS	Studs at 400 mm centres and dwangs at 1200 mm	200 mm

Top Plate Hold Down Connections

8.4 James Hardie Rigid Air Barriers can be used as an alternative to wire dog connectors to achieve a top plate connection capacity of 4.7 kN in accordance with Fixing Type B of NZS 3604 Table 8.18. To achieve the connection strength, the HomeRAB® Pre-Cladding and RAB® Board sheets must be fixed along the top edge into the top plate with 50 x 2.8 mm hot-dip galvanised or ring shank stainless steel round head nails, or hand driven 40 x 2.8 mm hot-dip galvanised or ring shank stainless steel HardieFlex™ nails at 75 mm centres. The fixings must be positioned a minimum of 20 mm from the sheet edge. The fastener heads must finish flush with the sheet surface. The remainder of the sheet is fixed in accordance with Table 2 or Table 3.

Wall Cladding Fixing

8.5 The length of the selected wall cladding fixing must be increased by a minimum of the thickness of the James Hardie Rigid Air Barrier to maintain the face load strength of the wall cladding system.

Bracing

8.6 HomeRAB® Pre-Cladding and RAB® Board can be used to provide structural bracing. This has not been assessed by this Appraisal and is outside its scope.

Durability

9.1 James Hardie Rigid Air Barriers meet code compliance with NZBC Clause B2.3.1 (a), not less than 50 years when used where the cladding durability requirement or expected serviceable life is not less than 50 years, e.g. behind masonry veneer, and code compliance with NZBC Clause B2.3.1 (b), 15 years where the cladding durability requirement is 15 years.

Serviceable Life

9.2 Provided they are not exposed to the weather or ultra-violet light for a total of more than 90 days, and provided the exterior cladding is maintained in accordance with the cladding manufacturer's instructions and the cladding remains weather resistant, James Hardie Rigid Air Barriers are expected to have a serviceable life of at least 50 years.

9.3 Areas of geothermal activity and coastal locations can be very corrosive to fasteners, especially coastal locations within distances of up to 500 metres of the sea including harbours, or 100 metres from tidal estuaries and sheltered inlets in some instances. These coastal locations are defined in NZS 3604: 2011 as Zone D and Zone C. For the James Hardie Rigid Air Barriers when used as a rigid sheathing to achieve a 50 year serviceable life in Zone D and Zone C where increased corrosion resistance is required, they must be fixed with stainless steel fasteners. Fasteners outside the Zone D and Zone C may be hot dipped galvanised steel.

Maintenance

10.1 James Hardie Rigid Air Barriers will not normally require maintenance. However, if damage occurs to the cladding or lining protecting the sheathing or to the sheathing itself, the repairs or replacement must be carried out to ensure the integrity of the rigid wall underlay.

Prevention of Fire Occurring

11.1 RAB® Board is considered a non-combustible material and need not be separated from heat sources such as fire places, heating appliances, flues and chimneys. However, when used in conjunction with, or attached to heat sensitive materials, the heat sensitive material must be separated from fireplaces, heating appliances, flues and chimneys in accordance with the requirements of Part 7 of NZBC Acceptable Solutions C/AS1 – C/AS6 and NZBC Verification Method C/VM1.

11.2 Separation or protection must be provided to HomeRAB® Pre-Cladding from heat sources such as fire places, heating appliances, flues and chimneys. Part 7 of NZBC Acceptable Solutions C/AS1 – C/AS6 and NZBC Verification Method C/VM1 provide methods for separation and protection of combustible materials from heat sources.

External Moisture

12.1 James Hardie Rigid Air Barriers must be used behind claddings that meet the performance requirements of NZBC Clause E2.

12.2 James Hardie Rigid Air Barriers, when installed in accordance with the Installation Manual and this Appraisal, will assist in the total cladding system's compliance with NZBC Clause E2.

Installation Information

Installation Skill Level Requirements

13.1 Installation must always be carried out in accordance with the James Hardie Rigid Air Barriers Installation Manual and this Appraisal, by competent tradespersons with an understanding of rigid wall underlay installation.

System Installation

James Hardie Rigid Air Barriers Installation

14.1 James Hardie Rigid Air Barriers may be cut by scoring and snapping, hand guillotine, hand or power saw. Holes and cut-outs may be formed by drilling a number of holes around the perimeter of the opening required and tapping out the centre with a hammer, or by using a hole saw.

14.2 Sheets must be dry prior to installation. Cut edges that are left exposed must be sealed prior to installation.

14.3 Prior to fixing James Hardie Rigid Air Barriers, a check must be made to ensure all sheet edges will be supported by framing. At the base of the wall, the sheet must hang below the bottom plate by a minimum of 15 mm.

14.4 James Hardie Rigid Air Barriers must be fixed to the timber framing with 50 x 2.8 mm hot-dip galvanised or ring shank stainless steel round head nails, or hand driven 40 x 2.8 mm hot-dip galvanised or ring shank stainless steel HardieFlex™ nails. Refer to Table 2, Table 3 and Paragraph 8.4 for fixing centres and Paragraph 9.3 for material selection.

14.5 At vertical joints, James Hardie Rigid Air Barriers must be installed with a 2-3 mm gap between the sheet edges and must be supported over vertical framing. At horizontal joints between floor levels, James Hardie Rigid Air Barriers must be installed with a minimum 10 mm gap between the sheet edges and must be supported over horizontal framing. At inter-storey floor levels, James Hardie Rigid Air Barriers must not be fixed to inter-storey joists or blocking and must have a minimum 15 mm gap between the sheet edges at this point to allow for shrinkage of the framing. All horizontal joints must be flashed with a uPVC flashing.

14.6 Any damaged areas, such as holes or gaps around service penetrations, must be repaired. Damaged areas can be repaired by covering with joint sealing tape.

Joint Sealing Tape Installation

14.7 All vertical sheet joints, internal and external corners must be covered with 3M™ All Weather Flashing Tape 8067, Protecto Sill, or Super-Stick joint sealing tape. Inseal® 3259 tape can also be used, however it must be covered with cavity battens as soon as it is installed. The manufacturer's instructions regarding the application temperatures for the joint sealing tapes, and the requirements for the use of adhesive primer must be followed.

14.8 James Hardie Rigid Air Barriers must be cleaned of dust and other surface contaminants prior the application of the joint sealing tape to ensure adequate adhesion is achieved.

Flexible Sill and Jamb Tape Installation

14.9 The selected flexible sill and jamb tape flashing system must be installed in accordance with the tape manufacturer's instructions, except where varied by the James Hardie Rigid Air Barriers Installation Manual. Particular attention must be paid to the installation of the sill and jamb tapes around window and door joinery openings to ensure all exposed timber wall framing in the opening is protected.

Inspections

14.10 The Installation Manual must be referred to during the inspection of James Hardie Rigid Air Barriers installations. When the construction sequence is followed in accordance with Paragraph 7.10 and the Installation Manual, the BCA inspections for pre-cladding and pre-lining may be combined.

Health and Safety

15.1 Cutting of James Hardie Rigid Air Barriers must be carried out in well ventilated areas, and a dust mask and eye protection must be worn.

15.2 When power tools are used for cutting, grinding or forming holes, health and safety measures as set out in the Installation Manual must be undertaken because of the amount of dust generated.

15.3 Safe use and handling procedures for James Hardie Rigid Air Barriers and the components that make up the cladding system are provided in the relevant manufacturer's Installation Manual.

Basis of Appraisal

The following is a summary of the technical investigations carried out:

Tests

16.1 Testing has been carried out by James Hardie Building Products to determine the face load pressure resistance of HomeRAB® Pre-Cladding. Testing has also been carried out by James Hardie Building Products to determine the face load pressure resistance of RAB® Board in conjunction with Titan Facade Panels. The testing was completed in a NATA Accredited laboratory and was observed by BRANZ. The test method and results have been reviewed by BRANZ and found to be satisfactory.

16.2 The resistance of James Hardie Rigid Air Barriers to water vapour transmission in accordance with AS/NZS 4200.1 and resistance to water penetration in accordance with AS/NZS 4201.4 has been completed by BRANZ.

Other Investigations

17.1 Structural and durability opinions were given by BRANZ technical experts.

17.2 BRANZ expert opinion on NZBC E2 code compliance for James Hardie Rigid Air Barriers was based on evaluation of all details within the scope and as stated within this Appraisal. The details contained within the Installation Manual have been reviewed, and an opinion has been given by BRANZ technical experts that the system will meet the performance levels of Acceptable Solution E2/AS1 for rigid wall underlays.

17.3 Site inspections were carried out by BRANZ to assess the practicability of installation.

17.4 The Installation Manual for James Hardie Rigid Air Barriers has been examined by BRANZ and found to be satisfactory.

Quality

18.1 The manufacture of James Hardie Rigid Air Barriers has been examined by BRANZ, including methods adopted for quality control. Details regarding the composition of the materials used were obtained by BRANZ and found to be satisfactory.

18.2 The quality of materials, components and accessories supplied by James Hardie New Zealand is the responsibility of James Hardie New Zealand. The quality control system of James Hardie New Zealand has been assessed and registered as meeting the requirements of ISO 9001: 2008 by Telarc SAI Limited.

18.3 Quality of installation on site of components and accessories supplied by James Hardie New Zealand and the building contractor is the responsibility of the installer.

18.4 Designers are responsible for the building design, and building contractors are responsible for the quality of installation of the framing systems, uPVC flashings, joint seal tapes and flexible sill and jamb tape systems in accordance with the instructions of James Hardie New Zealand.

Sources of Information

- AS/NZS 1170: 2002 Structural design action - General principles.
- AS/NZS 2908.2: 2000 Cellulose-cement products - Flat sheet.
- AS/NZS 4200.1: 1994 Pliable building membranes and underlays - materials.
- AS/NZS 4201.4: 1994 Pliable building membranes and underlays - Methods of test - Resistance to water penetration.
- NZS 3602: 2003 Timber and wood-based products for use in building.
- NZS 3603: 1993 Timber Structures Standard.
- NZS 3604: 2011 Timber-framed buildings.
- Acceptable Solutions and Verification Methods for the New Zealand Building Code External Moisture Clause E2, Ministry of Business, Innovation and Employment, Third Edition July 2005 (Amendment 6, 14 February 2014).
- Ministry of Business, Innovation and Employment Record of Amendments for Compliance Documents and Handbooks.
- The Building Regulations 1992.

Amendment No. 1, 3 September 2013.
This Appraisal has been amended to update clause changes as required by the introduction of NZBC Fire Clauses C1-C6 Protection from Fire and A3 Building Importance Levels.
Amendment No. 2, 15 December 2014.
This Appraisal has been amended to replace 3.5 mm thick HomeRAB® PreClad™ Lining with 4.5 mm thick HomeRAB® Pre-Cladding. The use of James Hardie Rigid Air Barriers as an alternative to the NZS 3604 top plate hold down connections has also been included.

BRANZ

In the opinion of BRANZ, James Hardie Rigid Air Barriers are fit for purpose and will comply with the Building Code to the extent specified in this Appraisal provided they are used, designed, installed and maintained as set out in this Appraisal.
The Appraisal is issued only to James Hardie New Zealand and is valid until further notice, subject to the Conditions of Appraisal.

Conditions of Appraisal

1. This Appraisal:
a) relates only to the product as described herein;
b) must be read, considered and used in full together with the technical literature;
c) does not address any Legislation, Regulations, Codes or Standards, not specifically named herein;
d) is copyright of BRANZ.
2. James Hardie New Zealand
a) continues to have the product reviewed by BRANZ;
b) shall notify BRANZ of any changes in product specification or quality assurance measures prior to the product being marketed;
c) abides by the BRANZ Appraisals Services Terms and Conditions.
d) Warrants that the product and the manufacturing process for the product are maintained at or above the standards, levels and quality assessed and found satisfactory by BRANZ pursuant to BRANZ's Appraisal of the product.
3. BRANZ makes no representation or warranty as to:
a) the nature of individual examples of, batches of, or individual installations of the product, including methods and workmanship;
b) the presence or absence of any patent or similar rights subsisting in the product or any other product;
c) any guarantee or warranty offered by James Hardie New Zealand
4. Any reference in this Appraisal to any other publication shall be read as a reference to the version of the publication specified in this Appraisal.
5. BRANZ provides no certification, guarantee, indemnity or warranty, to James Hardie New Zealand or any third party.

For BRANZ

P Burghout
Chief Executive

Date of issue: 26 August 2011

James Hardie
a smarter way™

James Hardie®

RIGID AIR BARRIERS

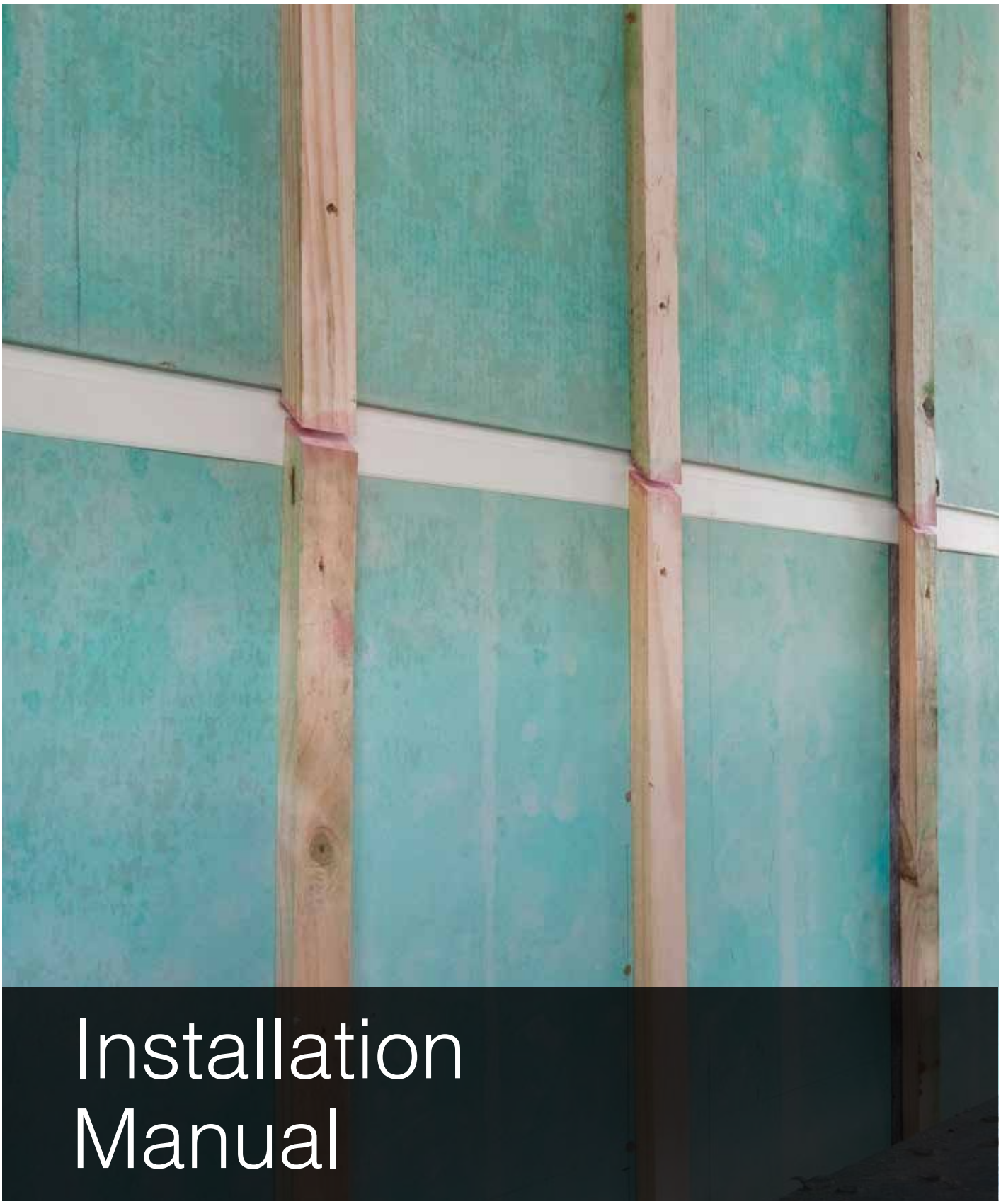

Installation Manual

APRIL 2016 | NEW ZEALAND

Content

1 INTRODUCTION 2

2 SAFE WORKING PRACTICES 6

Warning 6
Recommended Safe Working Practices 6
Working Instructions 7
Hole Forming 7
Storage and Handling 7
Quality 7

3 APPLICATIONS 8

Study to Top Plate Fixing 8
Temporary Weather Protection 8

4 FRAMING AND FIXINGS 9

Framing 9
Fixings 9
Fastener Durability 9

5 INSTALLATION 11

Board Layout 11
Stud to Top Plate Fixing 18
Surface Clearances 23
Alpine Region 23

6 PRODUCT INFORMATION 24

General 24
Durability 24

7 FINISHES AND MAINTENANCE 24

PRODUCT WARRANTY 27

WE VALUE YOUR FEEDBACK

To continue with the development of our products and systems, we value your input. Please send any suggestions, including your name, contact details, and relevant sketches to:

Ask James Hardie™
Fax 0800 808 988
literaturefeedback@jameshardie.co.nz

1 Introduction

James Hardie manufactures a range of rigid air barriers such as HomeRAB® Pre-Cladding and RAB® Board.

HomeRAB Pre-Cladding is a 4.5mm thick fibre cement sheet which is sealed on the face and edges and is used as a rigid air barrier for residential buildings within the scope of NZS 3604. HomeRAB Pre-Cladding is manufactured in New Zealand by James Hardie and complies with the requirements of AS/NZS 2908.2.

It acts as temporary weather protection during construction, ideal for renovations or new construction. It is suitable for use as rigid underlay in residential buildings as per section 9.1.4 of E2/AS1 and complies with the requirements of Table 23 of E2/AS1. HomeRAB Pre-Cladding is suitable to withstand wind pressures experienced in all wind zones up to and including Very High (VH) wind zone as specified in NZS 3604. HomeRAB Pre-Cladding doesn't get fatigued or tear under the wind pressures exerted on it in the long term. HomeRAB Pre-Cladding has been tested to withstand wind pressures up to VH wind zone.

RAB Board is a 6.0mm thick fibre cement sheet which is sealed on the face and edges and is suitable for use as a rigid air barrier in Extra High Wind (EH) zones or in wind pressures up to 4.5kPa.

It complies with the requirements of Table 23 of E2/AS1.

It is suitable for use as rigid underlay as per the requirement of section 9.1.4 of E2/AS1. RAB Board is also suitable to withstand high wind pressures experienced on building facades where it creates a wind barrier which equalises pressure within the cavity to the external pressures. Flexible underlays can deteroirate caused by positive/negative pumping actions created by gusting winds within the cavity and on building facade.

Figure 1: James Hardie Rigid Air Barriers over framing

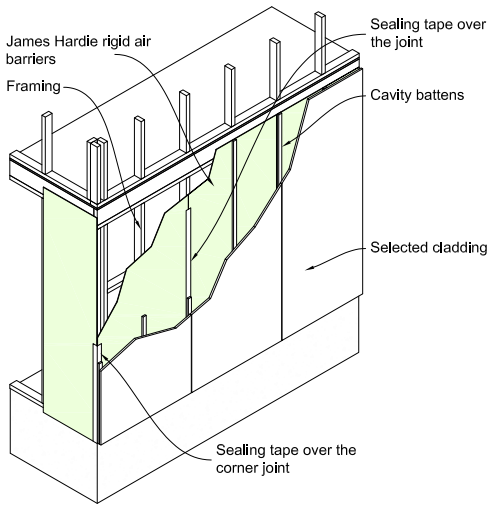

Selected Cladding Over Framing

Due to these pressures a building underlay may not perform as desired in the long term. RAB Board has been tested to withstand wind pressures up to 4.5kPa(ULS).

James Hardie rigid air barriers provide the following benefits:

- Resistant to moisture damage and rotting when installed correctly.
- Integral sealer applied on the face and edges repels moisture rapidly and helps resist moisture penetration.
- Provides temporary weathertightness to the building envelope until the final claddings are installed.
- Provides general rigidity to the entire structure.
- An efficient way to achieve structural bracing.

This manual covers the use of HomeRAB Pre-Cladding and RAB Board in external wall applications only. Further information relating to HomeRAB Pre-Cladding and RAB Board is also available in the following James Hardie design manuals:

- Fire and Acoustic Design Manual.
- Bracing Design Manual.

The Specifier or other responsible party for the project must ensure that the information in this manual is appropriate for the intended application and that specific design and detailing is undertaken for areas which are not covered in this manual.

Note: James Hardie rigid air barriers must not be used as external cladding.

James Hardie rigid air barriers have been tested to comply with the performance requirements of the New Zealand Building Code (NZBC).

James Hardie rigid air barriers have been BRANZ appraised. This should be read in conjunction with this installation manual. BRANZ Appraisal No. 611 (2011) can be viewed on www.jameshardie.co.nz or www.branz.co.nz.

Make sure your information is up to date

When specifying or installing James Hardie products, ensure you have the current manual. If you're not sure you do, or you need more information, visit www.jameshardie.co.nz or Ask James Hardie on 0800 808 868.

Table 1

HomeRAB Pre-Cladding

Product	Description	Quantity / Size		
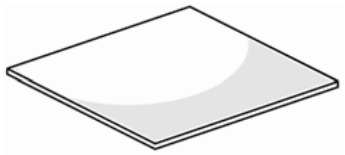	**HomeRAB Pre-Cladding** A fibre cement sheet with a green sealer applied on the face and edges. Installed with green side facing out. Approximate Mass: 6.5 kg/m^2	Thickness: 4.5mm		
		Length (mm)	Width (mm)	Code
		2450	1200	**404766**
		2750	1200	**404768**

RAB Board

Product	Description	Quantity / Size		
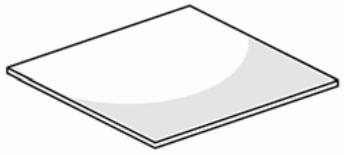	**RAB Board** A fibre cement sheet with a green sealer applied on the face and edges. Installed with green side facing out. Approximate Mass: 8.6 kg/m^2	Thickness: 6.0mm		
		Length (mm)	Width (mm)	Code
		2450	1200	**402980**
		3000	1200	**402981**

NOTE:

All dimensions and masses provided are approximate only and are subject to manufacturing tolerances.
Masses are based on Equilibrium Moisture Content (EMC) of product.

Table 2

Accessories/Tools			
Components Supplied by James Hardie			
	HardieBlade™ Saw Blade 185mm diameter, Poly diamond blade for fast, clean cutting of James Hardie fibre cement. **CODE: 300660**		**Inseal® 3259 Tape 50mm wide** A sealing strip for vertical joints 50m roll. **CODE: 300767**
	RAB uPVC Horizontal Flashing 3000mm long for RAB Board horizontal joints **CODE: 305152**		**Inseal® 3259 Tape 80mm wide** A sealing strip for corner joints 50m roll. **CODE: 300769**
	HomeRAB 4.5 Horizontal Flashing 3000mm long for horizontal joints **CODE: 305798**		

Table 3

COMPONENTS NOT SUPPLIED BY JAMES HARDIE

James Hardie recommends the following products for use in conjunction with its James Hardie rigid air barriers. James Hardie does not manufacture these products and does not provide a warranty for their use. Please contact component manufacturer for information on their warranties and further information on their products.

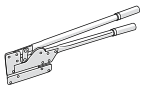	**Hand Guillotine** Guillotine for cutting fibre cement.		**Sealing Tape/Window Flashing Tape** Tape used to seal vertical joints and flash around window, door and pipe penetrations. **SUPER-STICK Building Tape®** **- Marshall Innovations** **0800 776 9727** **3M™ All Weather Flashing Tape 8067** **3M™ 0800 474 787**
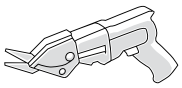	**Electric Shear / Fibreshear**		
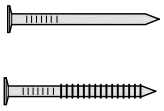	**Fibre Cement Nails** 40 x 2.8mm hot dipped galvanised HardieFlex™ nails as per Table 4. 40 x 2.8mm stainless steel HardieFlex™ nails as per Table 4.		**Scoring Knife** For easy score and snap cutting of fibre cement sheets.
	Nail Gun and Nails Suitable pneumatic or coil gun nailer with: • 50 x 2.8mm galvanised / stainless steel round head gun nails or minimum length and gauge required for specific application. • 60 x 2.8mm galvanised / stainless steel round head gun nails or minimum length and gauge required for site specific application.		

Figure 2: James Hardie Rigid Air Barriers with Linea Weatherboard

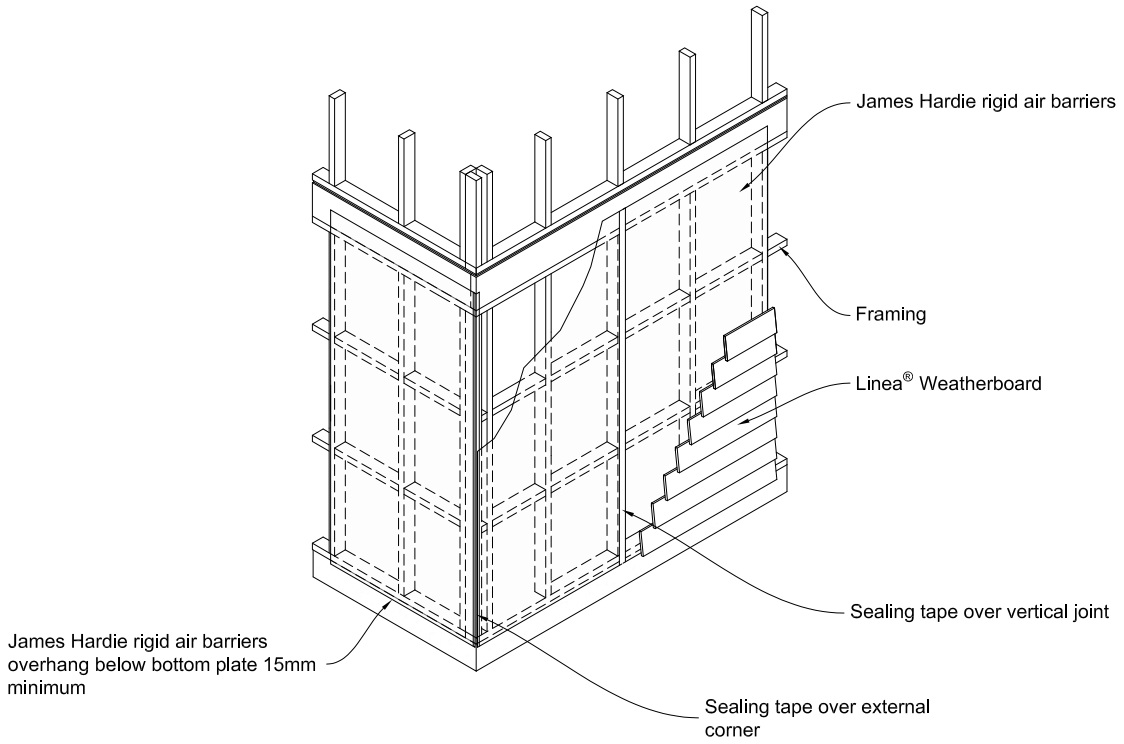

Figure 3: James Hardie Rigid Air Barriers with Brick/Block Cladding

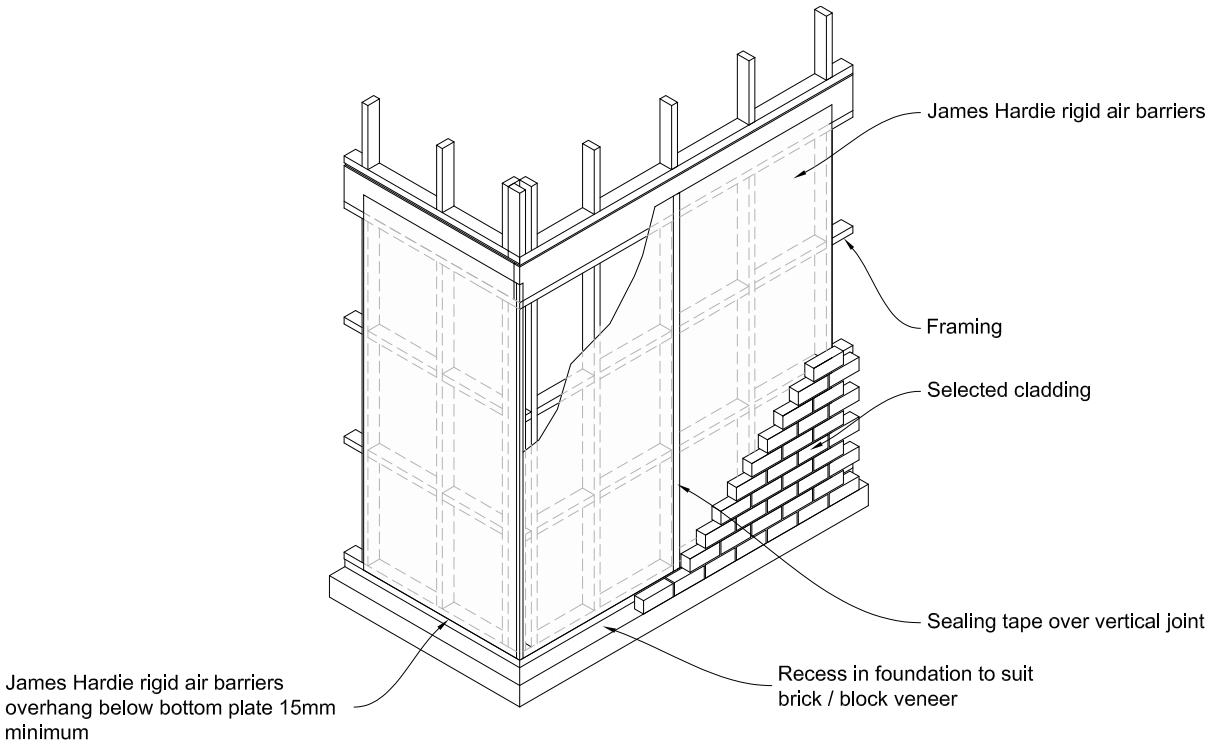

2 Safe working practices

WARNING — DO NOT BREATHE DUST AND CUT ONLY IN WELL VENTILATED AREA

James Hardie products contain sand, a source of respirable crystalline silica which is considered by some international authorities to be a cause of cancer from some occupational sources. Breathing excessive amounts of respirable silica dust can also cause a disabling and potentially fatal lung disease called silicosis, and has been linked with other diseases. Some studies suggest smoking may increase these risks. During installation or handling: (1) work in outdoor areas with ample ventilation; (2) minimise dust when cutting by using either 'Score and Snap' knife, fibre cement shears or, where not feasible, use a HardieBlade™ Saw Blade and dust-reducing circular saw attached to a HEPA vacuum; (3) warn others in the immediate area to avoid breathing dust; (4) wear a properly-fitted, approved dust mask or respirator (e.g P1 or P2) in accordance with applicable government regulations and manufacturer instructions to further limit respirable silica exposures. During clean-up, use HEPA vacuums or wet cleanup methods — never dry sweep. For further information, refer to our installation instructions and Safety Data Sheets available at www.jameshardie.co.nz.

FAILURE TO ADHERE TO OUR WARNINGS, SAFETY DATA SHEETS, AND INSTALLATION INSTRUCTION MAY LEAD TO SERIOUS PERSONAL INJURY OR DEATH.

James Hardie recommended safe working practices

CUTTING OUTDOORS

Position cutting station so that wind will blow dust away from user or others in working area. Use one of the following methods based on the required cutting rate:

BEST
- Score and snap
- Hand guillotine
- Fibreshear

BETTER
- Dust reducing circular saw equipped with HardieBlade™ Saw Blade and HEPA vacuum extraction.

GOOD
- Dust reducing circular saw equipped with HardieBlade™ Saw Blade

CUTTING INDOORS

- Cut only using score and snap, hand guillotine or fibreshears (manual, electric or pneumatic).
- Position cutting station in well-ventilated area

DRILLING/OTHER MACHINING

When drilling or machining you should always wear a P1 or P2 dust mask and warn others in the immediate area.

IMPORTANT NOTES:

1. For maximum protection (lowest respirable dust production), James Hardie recommends always using "Best" — level cutting methods where feasible
2. NEVER use a power saw indoors
3. NEVER use a circular saw blade that does not carry the HardieBlade™ logo
4. NEVER dry sweep — Use wet suppression or HEPA Vacuum
5. NEVER use grinders
6. Always follow tool manufacturer's safety recommendations

P1 or P2 respirators can be used in conjunction with above cutting practices to further reduce dust exposures. Additional exposure information is available at www.jameshardie.co.nz to help you determine the most appropriate cutting method for your job requirements. If concern still exists about exposure levels or you do not comply with the above practices, you should always consult a qualified industrial hygienist or contact James Hardie for further information.

Working instructions

Refer to Recommended Safe Working Practices before starting any cutting or machining of product.

Score and Snap

Score and Snap is a fast and efficient method of cutting the product using special tungsten tipped Score and Snap knife.

Preferably score on the face side of the product. Score against a straight edge and repeat the action to obtain adequate depth for clean break — normally 1/3 of sheet thickness. Snap upwards to achieve break. Smooth any rough edges with a rasp.

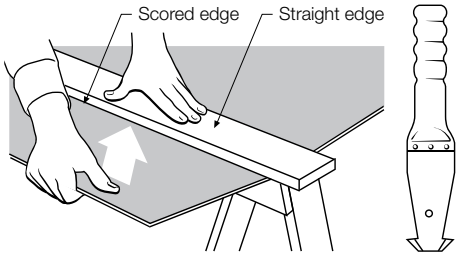

Hand guillotine

Make guillotine cut on the off-cut side of line to allow for the thickness of the blade.

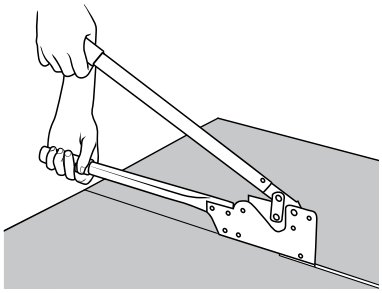

Fibreshear heavy duty

An electrically powered, fast, clean and effortless way of cutting James Hardie building products, especially around curves such as archways. Make Fibreshear cut on the "off-cut" side of the line to allow for the thickness of the shear.

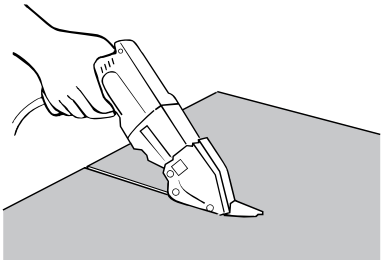

HardieBlade™ Saw Blade

The HardieBlade™ Saw Blade used with a dust-reducing saw fitted with HEPA vacuum filter is ideal for fast, clean cutting of James Hardie fibre cement products. A dust-reducing saw uses a dust deflector or a dust collector connected to a vacuum system. When sawing, clamp a straight-edge to the sheet as a guide and run the saw base plate along the straight edge when making the cut.

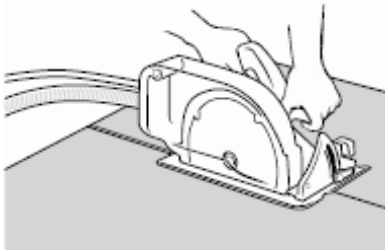

Hole-forming

For smooth clean cut circular holes:

- Mark the centre of the hole on the sheet.
- Pre-drill a 'pilot' hole.
- Using the pilot hole as a guide, cut the hole to the appropriate diameter with a hole saw fitted to a heavy duty electric drill.

For irregular holes:

- Small rectangular or circular holes can be cut by drilling a series of small holes around the perimeter of the hole then tapping out the waste piece from the sheet face.
- Tap carefully to avoid damage to sheets, ensuring that the sheet edges are properly supported.

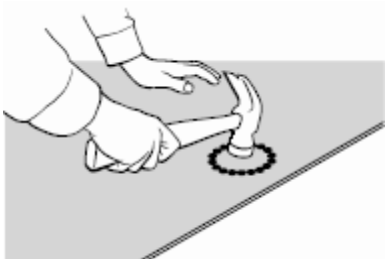

Storage and handling

To avoid damage, all James Hardie building products should be stored with edges and corners of the sheets protected from chipping.

James Hardie building products must be installed in a dry state and protected from weather during transport and storage. The product must be laid flat under cover on a smooth level surface clear of the ground to avoid exposure to water, moisture, etc.

Quality

James Hardie conducts quality checks to ensure any product manufactured falls within our quality spectrum. It is the responsibility of the builder to ensure the product meets aesthetic requirements before installation. James Hardie will not be responsible for rectifying obvious aesthetic surface variations following installation.

3 Applications

HomeRAB Pre-Cladding is suitable for use as a rigid air barrier for residential buildings up to and including VH wind zone within the scope of NZS 3604 and E2/AS1. HomeRAB Pre-Cladding is fixed directly to the framing. The vertical joints are sealed over the face of the HomeRAB Pre-Cladding. HomeRAB Pre-Cladding is suitable for use behind all James Hardie claddings or alternative claddings such as brick, timber weatherboard, EIFS etc.

The **RAB Board** is suitable for use as a rigid air barrier in EH wind zone in residential or SED project applications to withstand high wind pressures in conjunction with cladding/commercial facades. In these applications, RAB Board is fixed directly to the framing. The vertical joints are sealed over the face of the RAB Board using joint flashing tape.

JAMES HARDIE RIGID AIR BARRIER

James Hardie rigid air barriers can remain exposed to the external elements for maximum 90 days prior to the external cladding being installed.

The James Hardie rigid air barriers can be used as a backing board behind stucco plasters. Refer to James Hardie Stucco Solution technical specification, E2/AS1 'External Moisture' clause of the NZBC and BRANZ 'Weathertight Solutions Stucco' for further information on stucco plaster. The RAB Board can also be used as a backing board behind other proprietary claddings which comply with the NZBC requirements. Proprietary cladding must be installed as per their manufacturing specifications. In these applications, a building underlay must be used as a slip layer to cover RAB Board and ensure a separation between mortars and RAB Board. The RAB Board is fixed over a minimum 18mm thick cavity batten for these applications. The RAB Board may also be required over the framing to withstand high wind pressures within the cavity.

The claddings/facades used over James Hardie rigid air barriers must satisfy the various performance requirements of the NZBC.

Horizontal profiled metal and uPVC claddings must not be direct fixed over James Hardie rigid air barriers. These must be fixed over an underlay or overlay the James Hardie rigid air barrier using the cavity construction method.

Vertical profiled metal cladding can be direct fixed over James Hardie rigid air barriers with a flexible building underlay separator over to comply with manufacturers recommendations.

The cladding fastener length must be increased by 5mm minimum to maintain the required nail pull out strength.

In case of gable end trusses sitting on top plates of external wall frame, the frame size must comply with the minimum timber sizes stipuated for wall frames in Section 8 of the NZS 3604.

Bracing

For bracing application the James Hardie rigid air barriers must be installed as per HomeRAB Pre-Cladding/RAB Board bracing details in the James Hardie Bracing Design Manual. Bracing with HomeRAB Pre-Cladding can only be achieved for direct fix construction. Bracing can be achieved for both construction methods i.e. direct fixed and cavity construction using RAB Board. The board must be fixed with 40 x 2.8mm HardieFlex nails at 150mm c/c to all framing. For further information on bracing refer to James Hardie Bracing Design Manual or Ask James Hardie on 0800 808 868.

Fire Rated Wall Construction

RAB Board is classified as 'Non-Combustible Material'. For fire rated wall applications RAB Board must be installed as per the current James Hardie Fire and Acoustic Design Manual. RAB Board is suitable to achieve fire ratings up to 60 minutes when installed in accordance with fire systems specifications published in James Hardie Fire and Acoustic Design Manual. The board must be fixed with 40 x 2.8mm HardieFlex nails at 150mm c/c to all framing.

TEMPORARY WEATHER PROTECTION

Installation of internal lining can be started after James Hardie rigid air barriers have been installed on the exterior of the building envelope. In order to achieve this, all sheet joints and penetrations must be sealed and the roof, soffit lining, windows/doors (including head flashings and airseals) must have been installed to ensure the building is weathertight before starting the installation of internal linings. The insulation, electrical cables, plumbing and any other services required in external walls must be installed and inspected by the building consent authority before starting the installation of internal linings. The internal lining and services must be installed in accordance with their manufacturer's product literature and comply with the NZBC requirements.

The claddings must be installed within 90 days after the installation of James Hardie rigid air barriers.

STUD TO TOP PLATE FIXING

Alternative stud to top plate connection refer to Figure 15.

4 Framing and fixings

FRAMING

The timber framing must be in accordance with the current relevant standards or comply with the specific engineering design requirements. The timber treatment and moisture content must comply with NZBC Acceptable Solution B2/AS1 requirements. Framing must satisfy the requirements of B1 and B2 clauses of the NZBC.

The minimum framing size required for fixing James Hardie rigid air barriers is 90 x 45mm. Studs must be provided as per Table 4. Ensure that the framing is suitable for installing the selected cladding. Refer to cladding installation manual for further information about the framing requirements.

For specific engineering design projects where the timber framing differs from whats been provided in this manual, Ask James Hardie on 0800 808 868.

FIXINGS

James Hardie rigid air barriers must be installed with its sealed face towards the external cladding and unsealed face towards the framing. The sealer applied on the face helps the board to drain the moisture freely over the face and keeps it dry.

- Nails must finish flush with board surface.

The **HomeRAB Pre-Cladding and RAB Board** is fixed as described below.

HomeRAB Pre-Cladding and RAB Board can either be gun nailed or hand nailed. It is recommended to use gun nails to cut down installation time. When gun nailing, follow nail gun manufacturer's instructions for correct operation of tool and site safety requirements.

- Nails must have a minimum clearance of 12mm from the sheet edges and a minimum of 50mm horizontally and 75mm vertically from the sheet corners.
- When using a nail gun use 50 x 2.8mm round head gun nails. The gun nails used must have a full round head to provide the required holding power.

  NOTE: Do not use D Head nails. Do not use gun nailing for bracing applications.
- When fixing for bracing applications, follow the bracing details for installation provided in James Hardie Bracing Design Manual.
- When using as a backing board over a cavity batten for stucco plasters or proprietary claddings, fix using 60 x 3.15mm HardieFlex nails at 200mm c/c at board edges and intermediate framing.
- When RAB Board is used for a fire rating system, the board must be fixed with HardieFlex nails at 150mm c/c at board edges and intermediate framing.

NOTE: HomeRAB Pre-Cladding must not be used in EH wind zones. Use RAB Board instead.

Table 4

Fixings			
Wind pressures	**Stud centres max**	**Type of nail**	**Nailing centres to all framing**
HomeRAB Pre-Cladding / RAB Board			
Up to VH wind zone	600mm	40 x 2.8mm HardieFlex nail	200mm
RAB Board			
Above 1.5kPa to 4.5kPa (EH wind zone and SED project)	400mm	40 x 2.8mm HardieFlex nail	200mm

FASTENER DURABILITY

Fasteners must have the appropriate level of durability required for the intended project to comply with the NZBC. This is of particular importance in coastal areas, areas subject to salt spray and other corrosive environments. The following table provides the information regarding the types of nails to use to comply with the durability requirements of the NZBC.

Table 5

Exposure conditions and nail selection prescribed by NZS 3604			
ZONE:	D Zone*	Zone C outside sea spray zone and Zone B and Geothermal hot spots	Bracing — outside sea spray
NAIL MATERIAL:	Grade 316 Stainless steel	Hot-dipped galvanised** or grade 316 stainless	Hot-dipped galvanised**

*Zone C areas where local knowledge dictates that increased durability is required are to be classified as sea spray zones. Also where the cladding is expected to meet 50 year durability, HomeRAB Pre-Cladding/RAB Board must be fixed with stainless steel nails.

** Hot dip galvanised must comply with AS/NZS 4680

Check with the local Territorial Authority if unsure. Refer to fixing manufacturer for warranty and fixing installation guidance.

Fasteners must be fully compatible with all other materials that they are in contact with to ensure the durability and integrity of the assembly. Contact fastener manufacturers for more information. Also refer to Table 20 and 21 of E2/AS1 for further information about the suitable fastening materials and their compatibility with other materials.

Galvanised nails can be used for bracing when in non coastal zones.

Figure 4: James Hardie Rigid Air Barriers layout

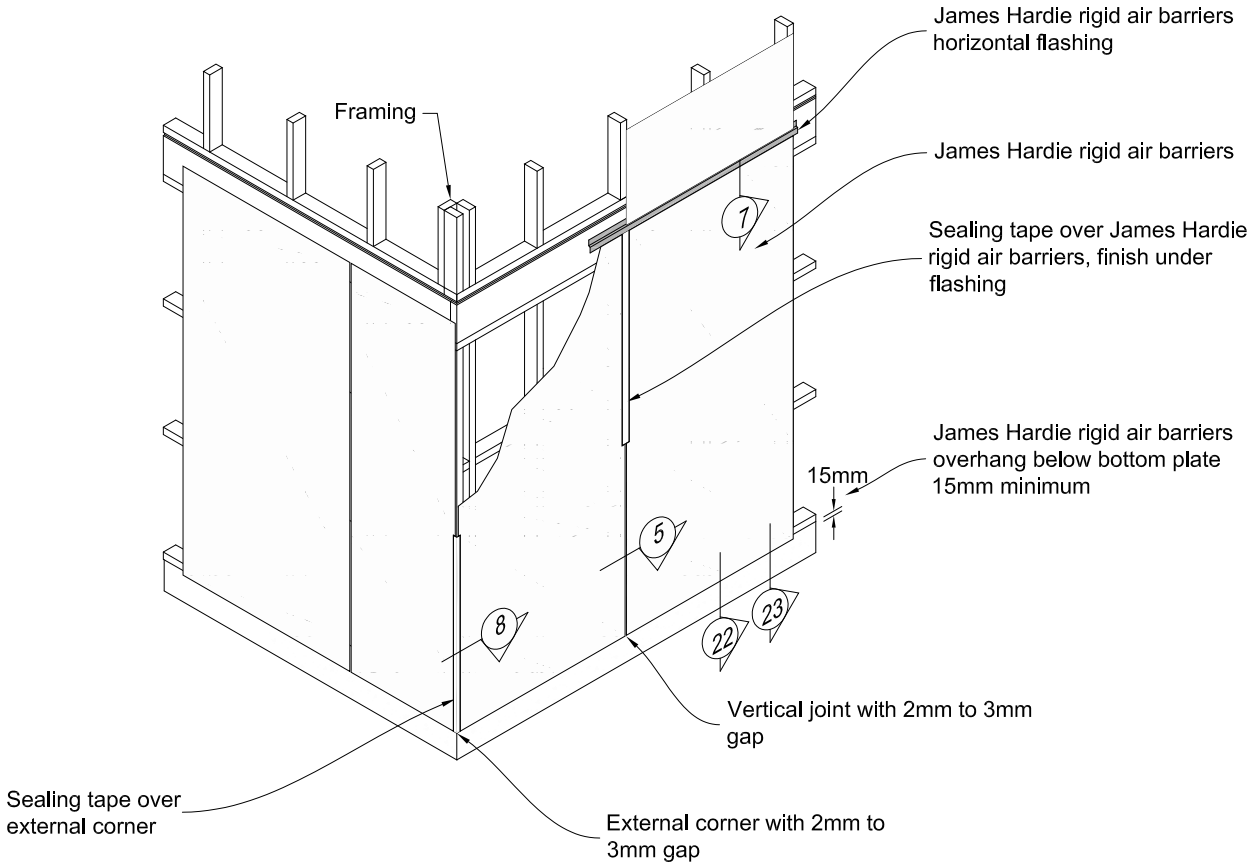

5 Installation

BOARD LAYOUT

When using James Hardie rigid air barrier, building underlays are not required over the framing. HomeRAB Pre-Cladding/ RAB Board has been tested and complies with the performance requirements of Table 23 of Clause E2 of the NZBC. The sheets are jointed keeping a gap of 2-3mm maximum between the sheet edges. The board must be cleaned of any dust before fixing the jointing tape over the joint.

Cut edges where exposed must be primed prior to installation with Dulux® Primacryl, Resene Quick Dry or similar.

The bottom edge of James Hardie rigid air barriers must overhang below the bottom plate by 15mm minimum. Refer Figures 21 and 22.

Vertical Joints

Vertical joints must be sealed to stop the moisture ingress into the framing behind James Hardie rigid air barrier. The vertical joints are sealed over by running a 75mm wide sealing tape e.g. SUPER-STICK Building Tape / 3M All Weather Flashing Tape 8067.

A 50mm wide Inseal 3259 sealing tape can also be used where the CLD Structural Cavity Batten or timber cavity battens are fixed over the joint. The Inseal tape gets compressed permanently under the cavity battens to seal the joint.

Inseal tapes must not be left exposed. Battens must be installed within 24 hours of the Inseal tape installation for the compression to happen. White protective tape must be removed before batten installation.

The sealing tapes must be pressed hard over the James Hardie rigid air barriers surface while fixing so that they achieve the required bond. The sealing tapes must not be exposed to elements for more than 90 days. This achieves the required protection when the cladding is installed. The claddings must be installed within 90 days.

NOTE: Refer to sealing tape manufacturers recommendations regarding the installation of their sealing tapes in cold climate conditions. It is recommended to warm up the sealing tapes eg when the air and substrate temperatures are below 10°C. Check with tape manufacturer for their recommendations

Horizontal Joints

The horizontal joint of James Hardie rigid air barriers must be flashed using a uPVC horizontal flashing or alternatively aluminium or colour steel Z flashings can also be used. Refer Figure 7. Leave a gap of minimum 15mm at the solid timber floor joist or as specified by the project engineer. The flashing must be lapped by a minimum 35mm on both sides of the joint.

For walls longer than 3m, horizontal uPVC flashing must be lapped by 50mm minimum and silicone sealed.

Rigid air barriers must not be fixed into floor joists.

Figure 5: Vertical joint

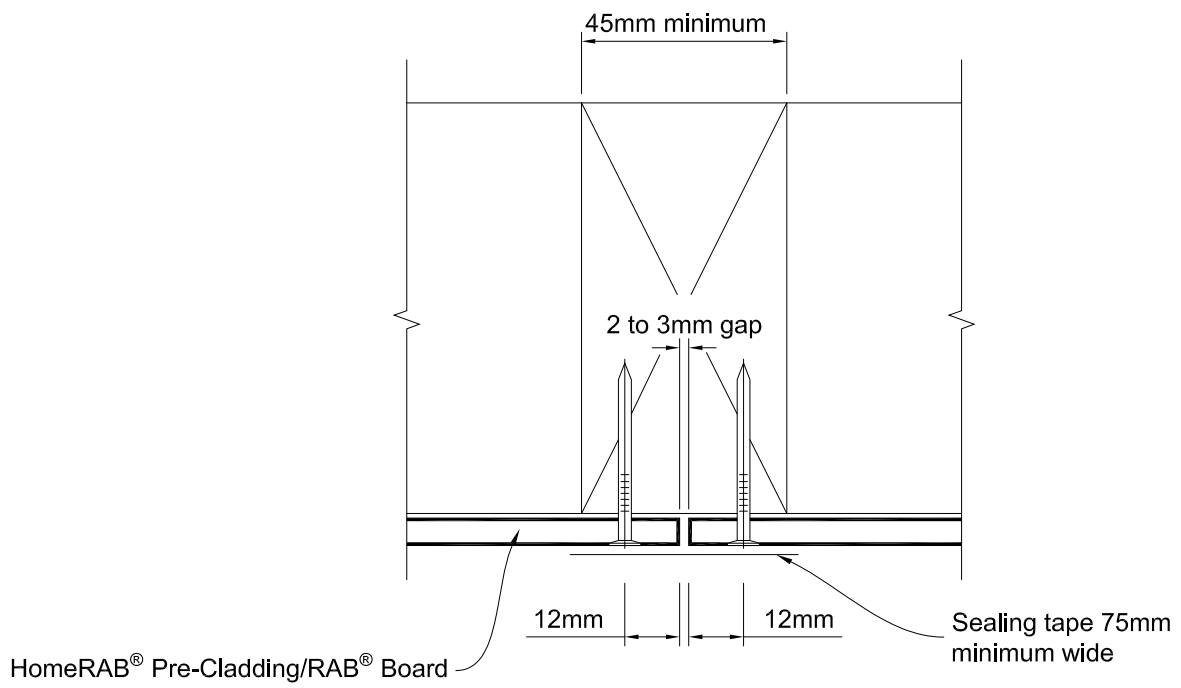

Internal/External Corners

James Hardie rigid air barrier corner joints must be sealed using a 75mm minimum wide sealing tape. A 80mm wide Inseal 3259 sealing tape can also be used where the cavity battens are fixed over the corner joint to compress the Inseal tape.

When using a uPVC horizontal flashing in horizontal joints, the internal and external corner flashing joints must be sealed using a 75mm minimum wide joint sealing tape. Refer Figure 10.

When using James Hardie rigid air barrier as a backing board for stucco plaster, the vertical joints of James Hardie rigid air barrier are not required to be sealed using flashing tapes. The horizontal joints at floor level and in tall walls must be flashed to satisfy the requirements of clause E2 of the NZBC.

Figure 6: Horizontal joint flashing

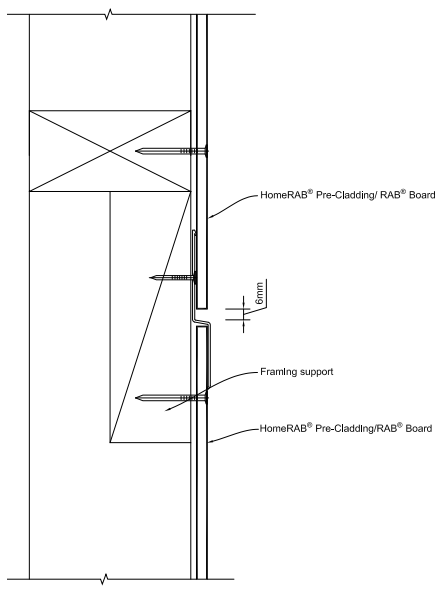

Figure 7: Horizontal joint

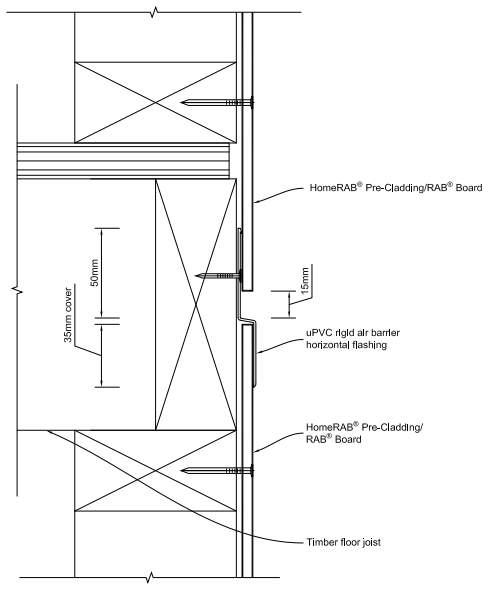

Figure 8: External corner joint

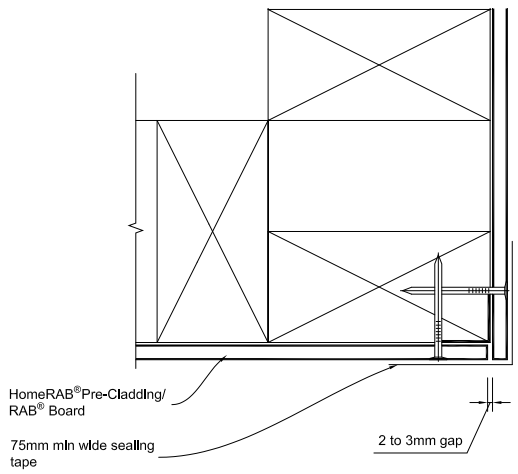

Figure 9: Internal corner joint

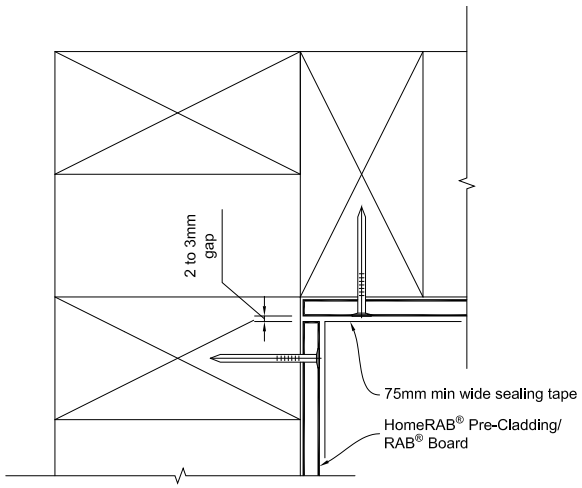

Figure 10a: Corner junction to horizontal joint

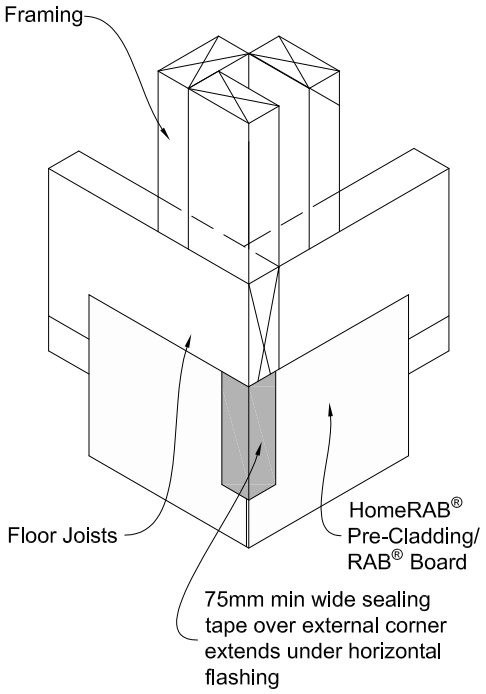

Figure 10c: Corner junction to horizontal joint

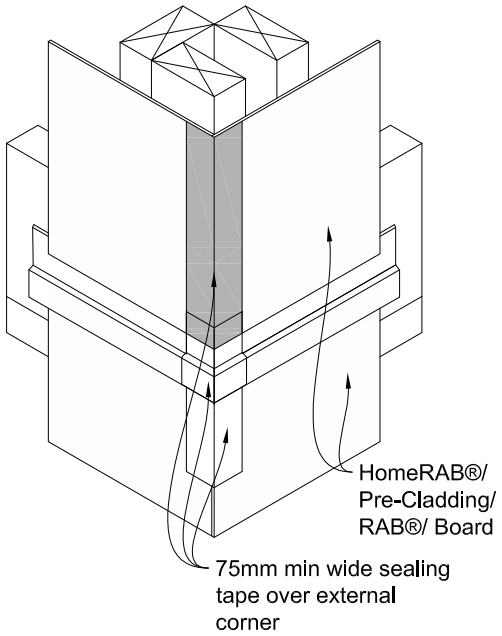

Figure 10b: Corner junction to horizontal joint

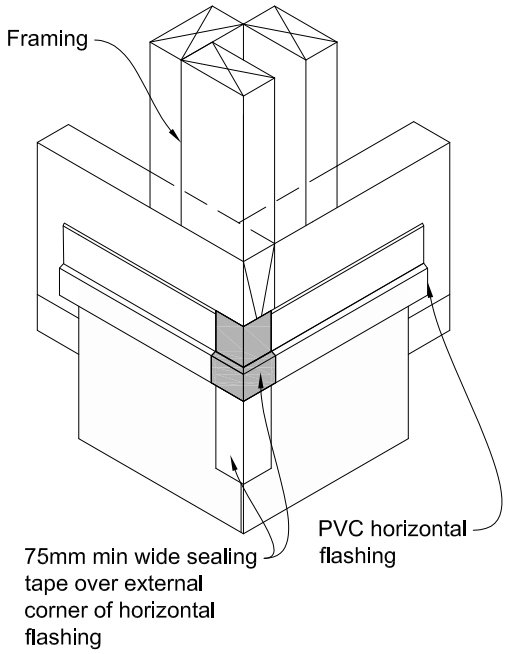

Flexible Underlay

James Hardie rigid air barriers can also be used in conjunction with flexible underlay in accordance with Section 9.1.7.2 of E2/AS1. When installing rigid underlay as per E2/AS1 requirements, its horizontal and vertical joint does not require to be sealed with flashing tapes, but instead, a flexible underlay is applied over the entire rigid air barrier in accordance with Section 9.1.7.1. The flexible underlay must comply with Table 23 of E2/AS1. The wall openings must be flashed in accordance with E2/AS1 and this installation manual.

Figure 11: RAB Board used as backing board for stucco plaster/proprietary cladding systems

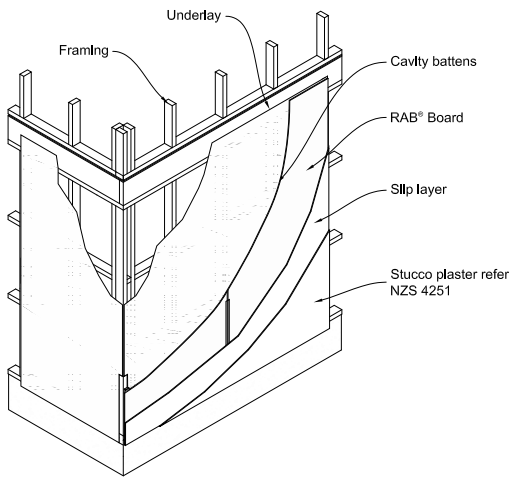

Figure 12: James Hardie Rigid Air Barriers to standard soffit

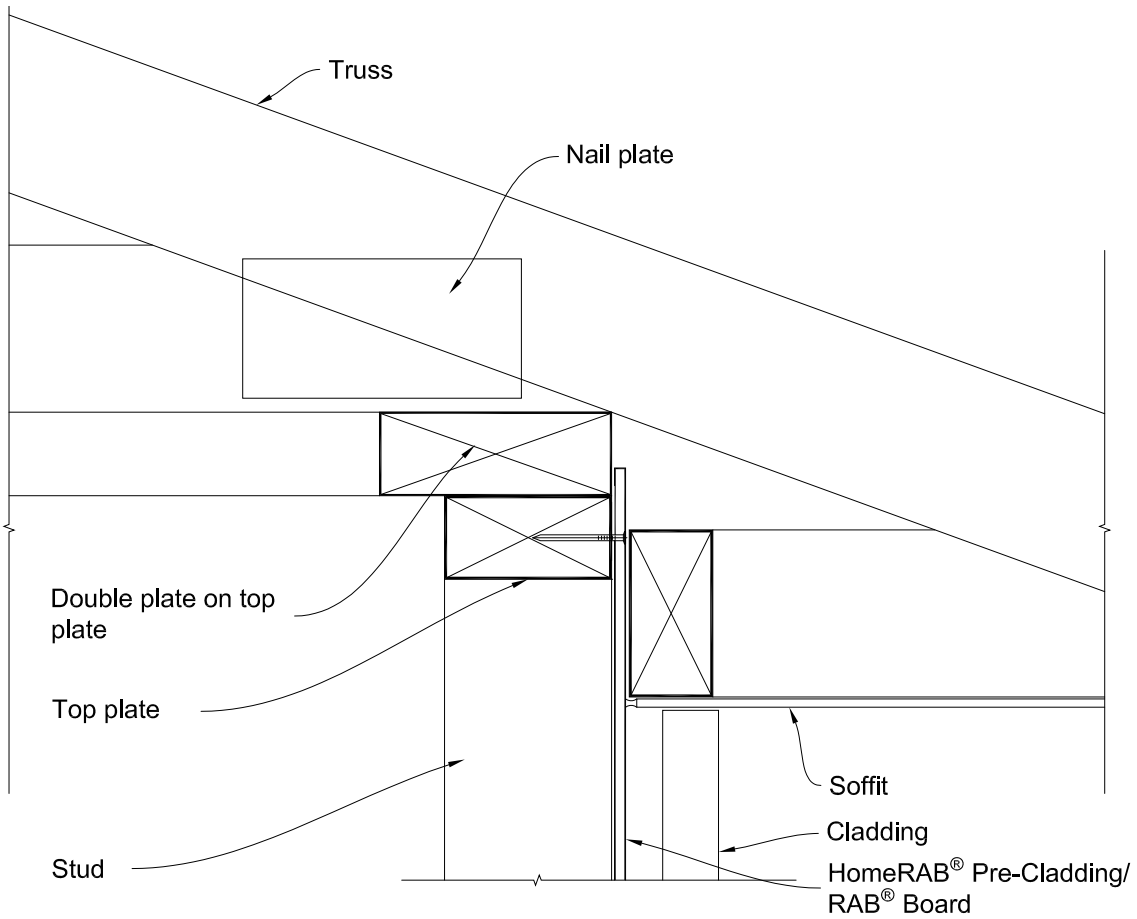

Figure 13: RAB Board to soffit junction/concrete

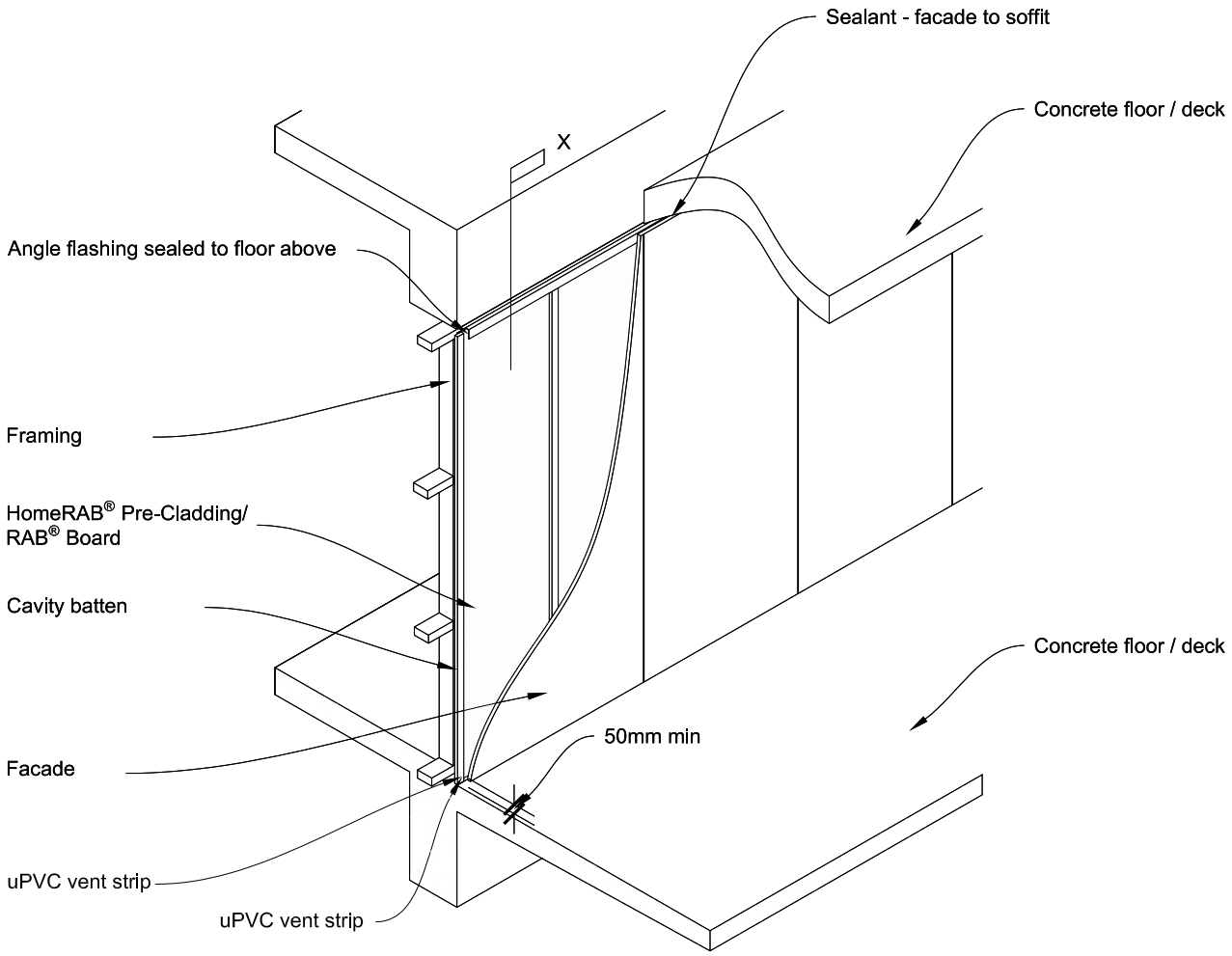

Note:
Check facade manufacturer for clearances

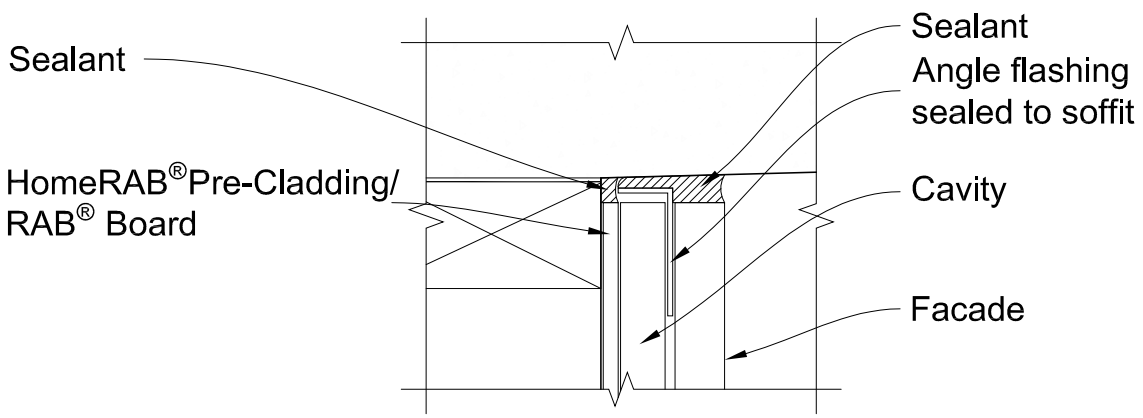

Section X

Penetrations

The pipe penetrations through James Hardie rigid air barrier must be sealed properly using a flexible flashing tape. Maintain a 100mm minimum cover of flashing over the board around the penetration.

Figure 14: Pipe penetration through James Hardie Rigid Air Barriers

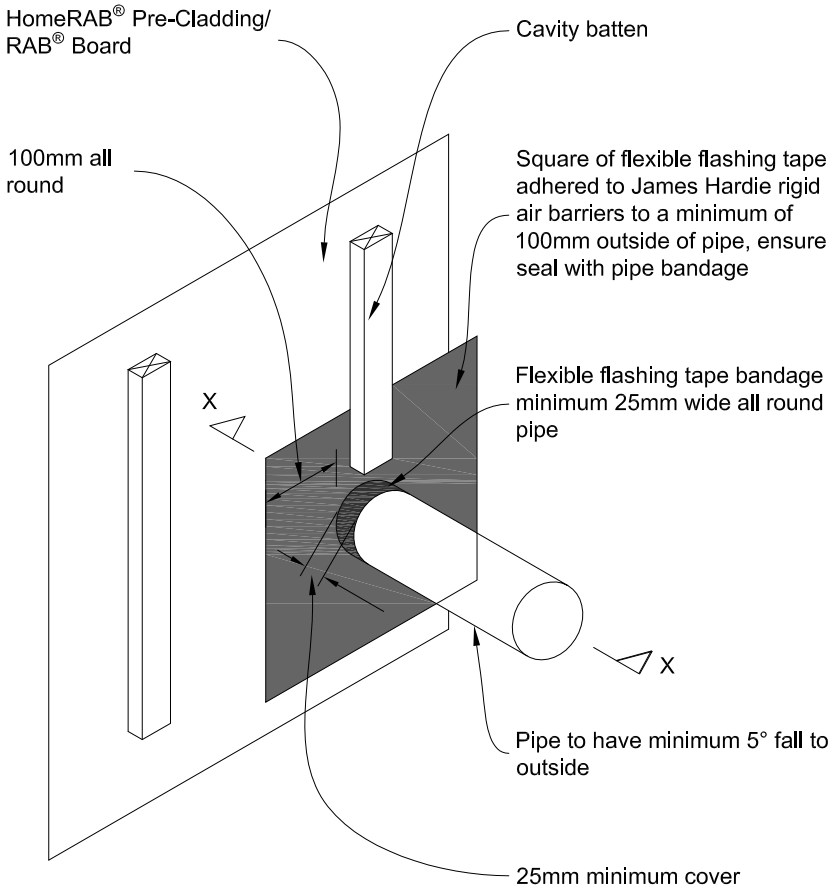

Note: Also refer to Figure 60 of E2/AS1 for information on pipe penetrations.

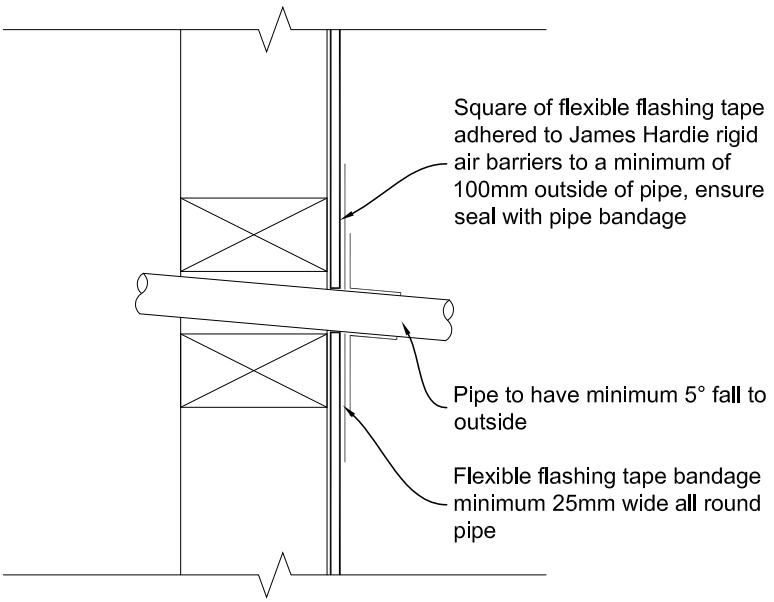

Section XX

Figure 15: Lintel connection

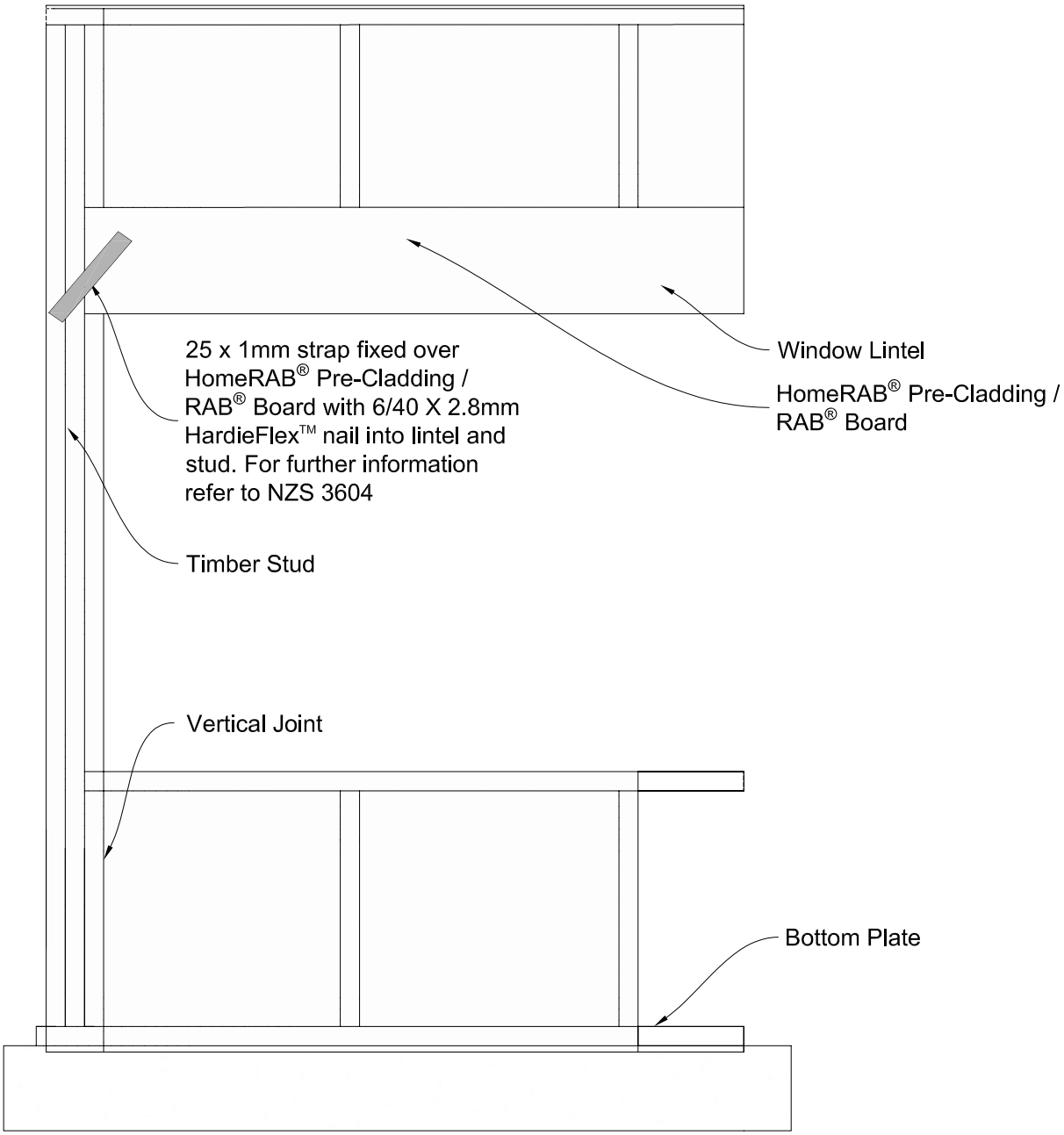

STUD TO TOP PLATE FIXING

Table 8.18 of NZS 3604 specifies two types of fixings i.e. Type-A with a fixing capacity of 0.7kN and Type-B with a fixing capacity 4.7kN. HomeRAB Pre-Cladding or RAB Board rigid air barriers have been tested and are verified as suitable alternatives to achieve the required stud top plate connectivity as mentioned above and no special use of straps/plates or wire dogs etc. is required.

For a 0.7kN connectivity, the standard fixing of HomeRAB Pre-Cladding and RAB Board using 40 x 2.8mm HardieFlex nails at 200mm centres maximum will achieve this.

For a 4.7kN connectivity, fix HomeRAB Pre-Cladding or RAB Board using 40 x 2.8mm HardieFlex nails at 75mm centres maximum to top plate with a minimum edge distance of 20mm. Refer to Figure 15.

Figure 16: Stud to top plate connection

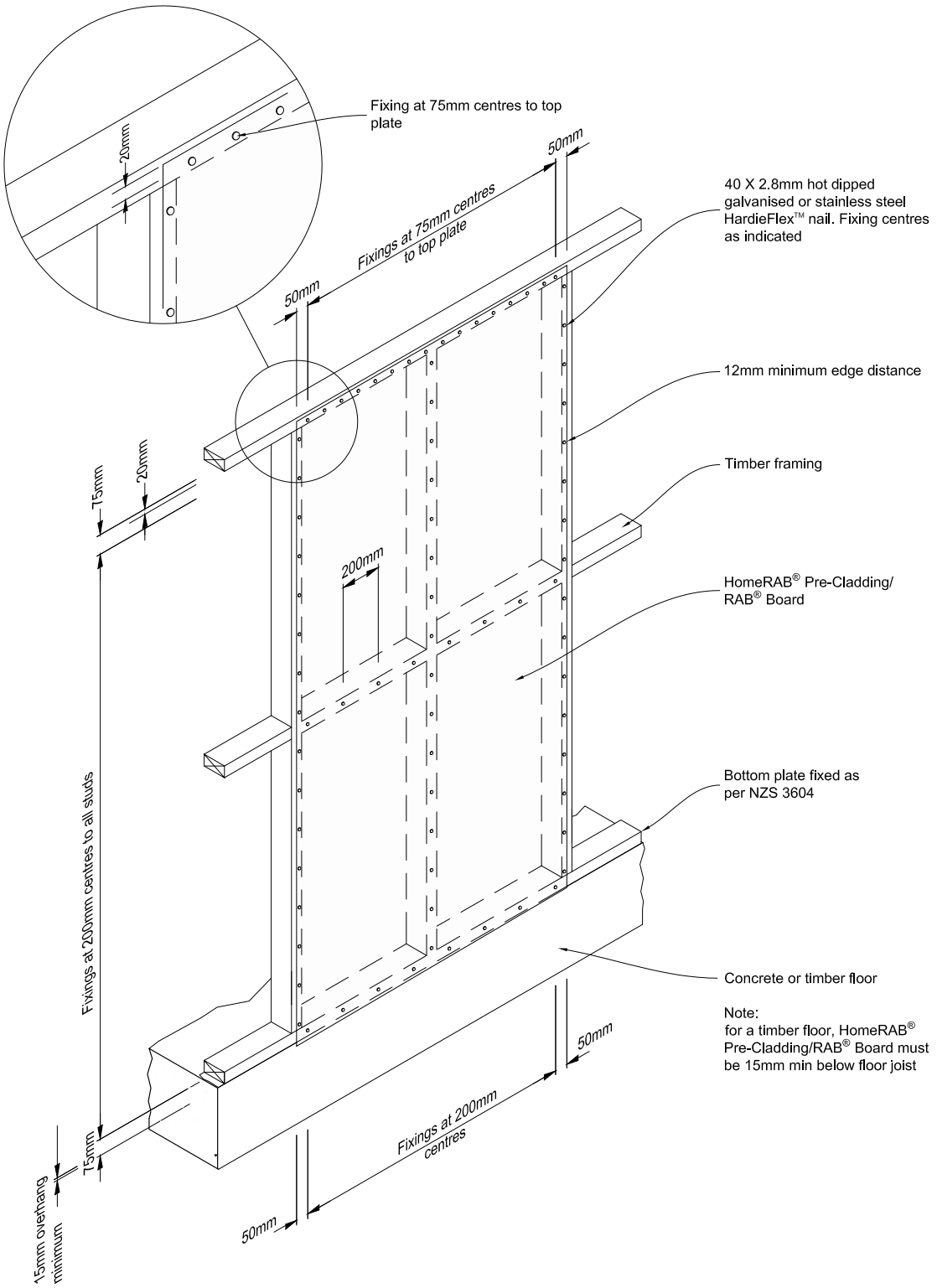

Flashings

The exposed timber framing around the window jamb can either be covered with a 150mm minimum wide flashing tape / sealing tape, refer Figure 19, or the jamb can be covered with a building underlay, refer Figure 20. The window sill must be dressed with a 150mm minimum wide flashing tape. The tape is sealed over the face of James Hardie rigid air barrier, refer Figure 16.

The James Hardie rigid air barrier surface must be clean, free of grime and dry before the tapes are applied. Some tape manufacturers require a primer tak spray be applied before fixing the tapes to the board surface to achieve a better tape adhesion. Check with the tape manufacturers for further information regarding minimum requirements etc.

Figure 17: Window flashing

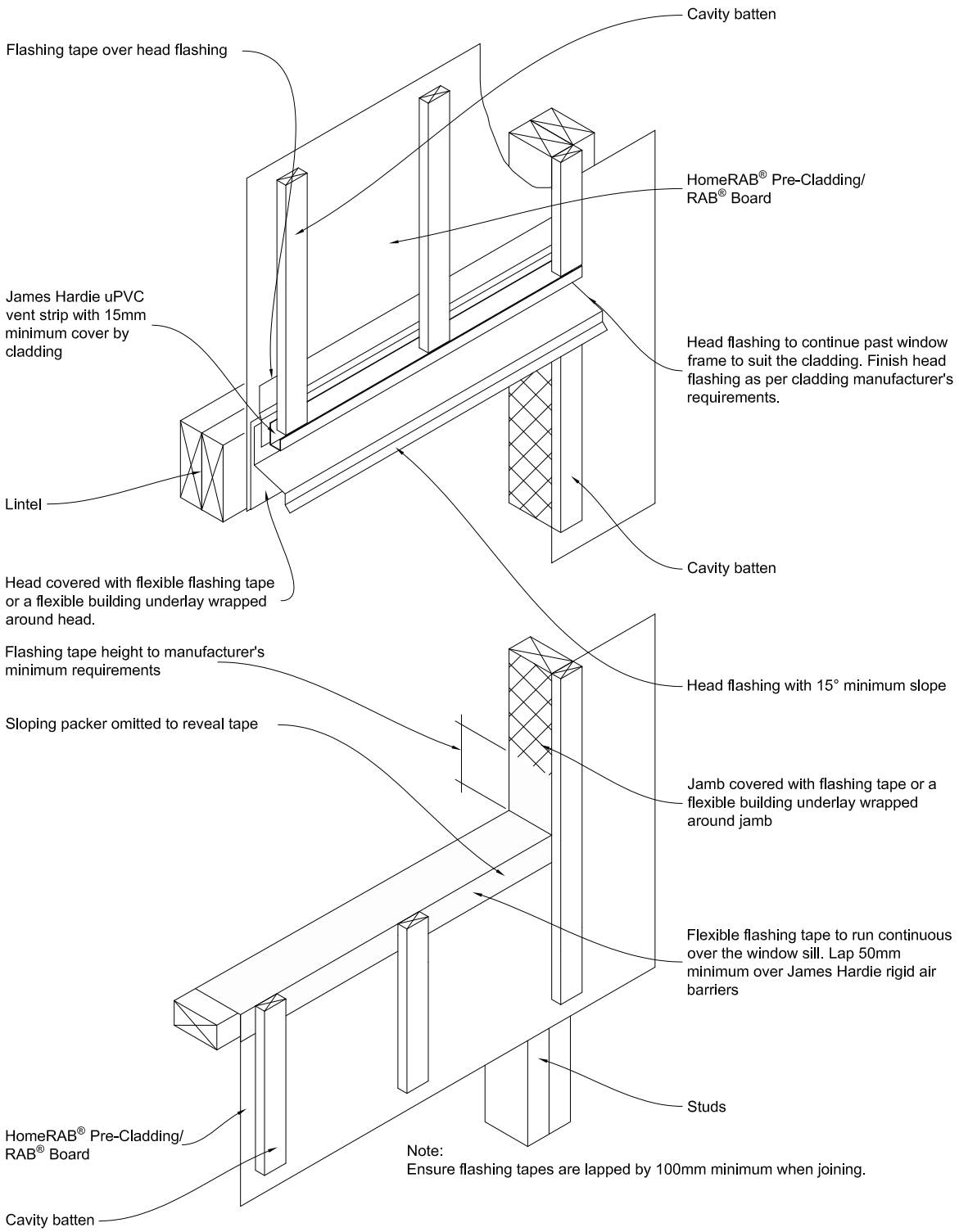

Figure 18: Apron flashing

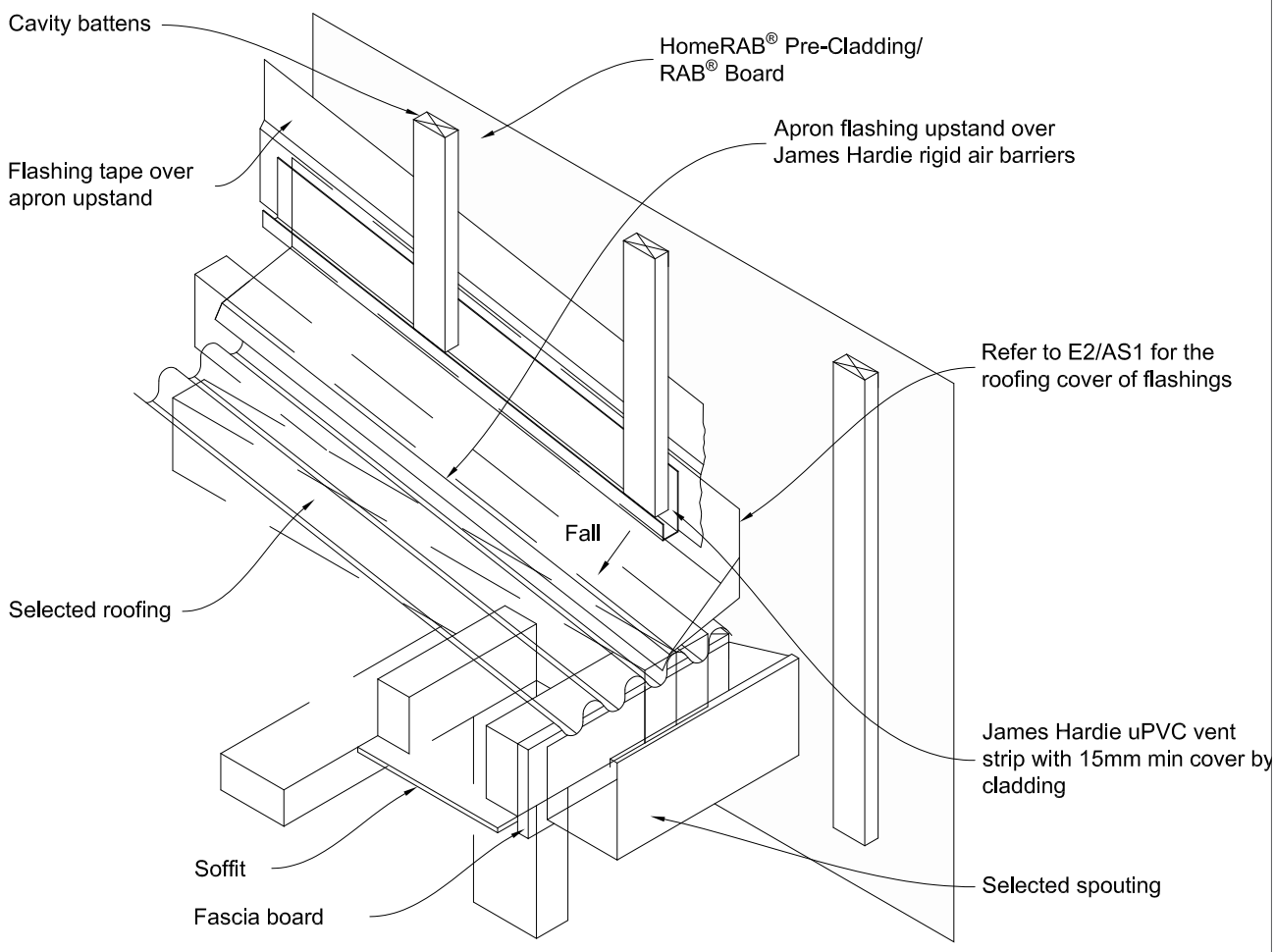

Balustrade to Wall Junctions

The junctions between balustrades to wall should be appropriately flashed. Refer to E2/AS1 of the NZBC for information and flashing details.

Figure 19: Flashing at balustrade

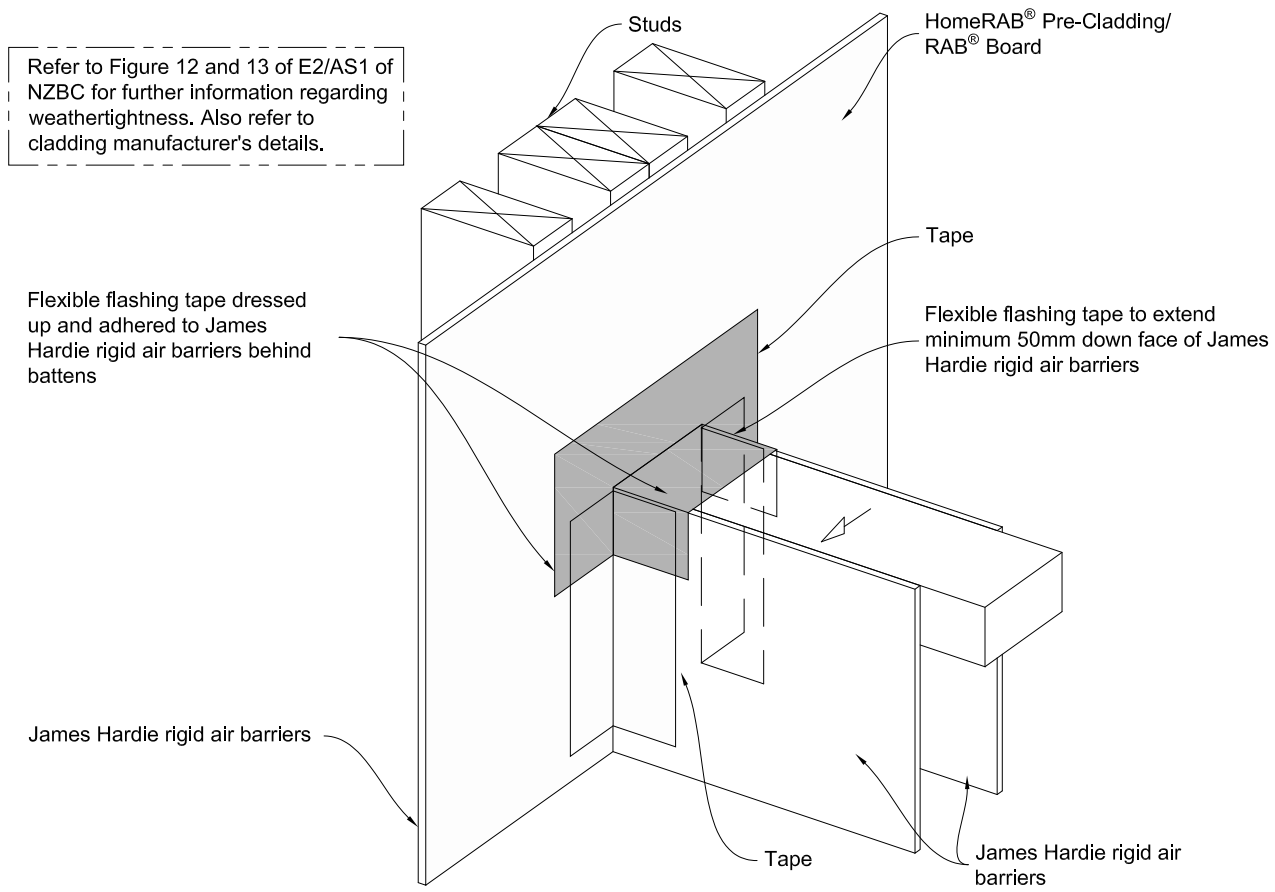

Figure 20: Window jamb with flashing tape

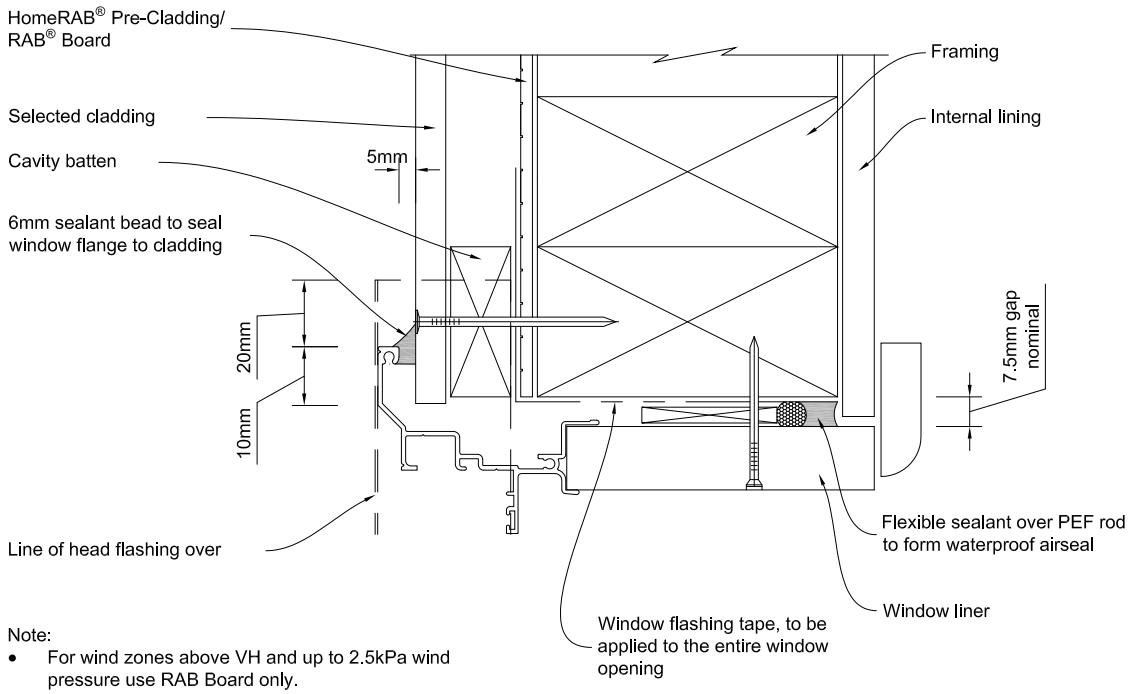

Note:
- For wind zones above VH and up to 2.5kPa wind pressure use RAB Board only.
- For higher wind pressures refer to cladding and window manufacturer.

Figure 21: Alternate window jamb with building underlay

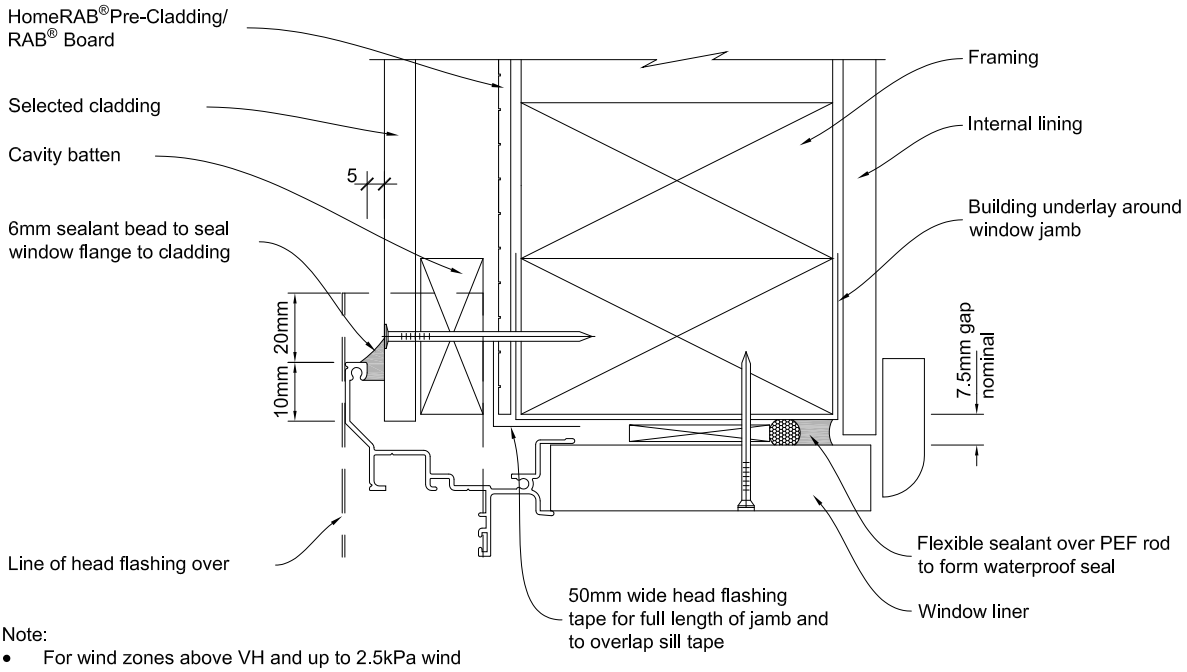

Note:
- For wind zones above VH and up to 2.5kPa wind pressure use RAB Board only.
- For higher wind pressures refer to cladding and window manufacturer.

Note: Flashing tapes must be installed to meet requirements of tape manufacturer

SURFACE CLEARANCES

James Hardie rigid air barriers must extend below the bottom plate by 15mm minimum over concrete foundation and 15mm past floor joist of timber foundation. James Hardie rigid air barriers must maintain a 100mm minimum clearance between the bottom edge of the sheet and the finished ground.

Check cladding manufacturer for minimum clearances required for the selected cladding.

Maintain the required clearances between the bottom plate and top of ground to comply with the NZBC and NZ standards. The adjacent finished ground must slope away from the building in accordance with the NZBC requirements. Do not install James Hardie rigid air barriers in such a way that it may remain in contact with standing water.

Figure 22: Foundation detail — direct fix cladding

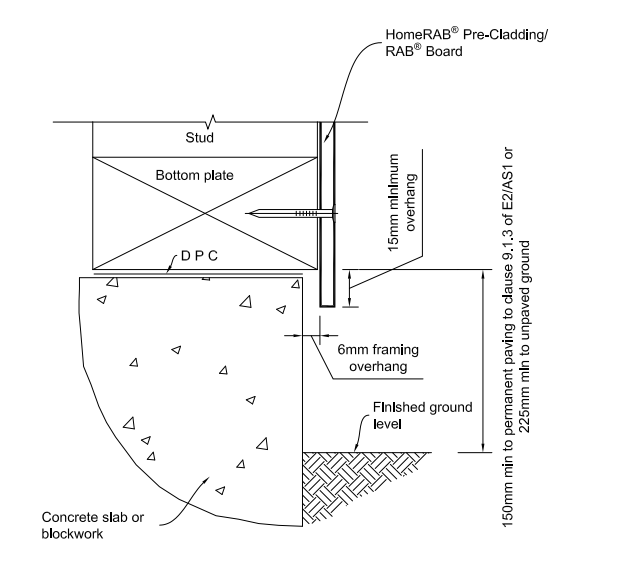

Figure 23: Foundation detail — cavity fix cladding

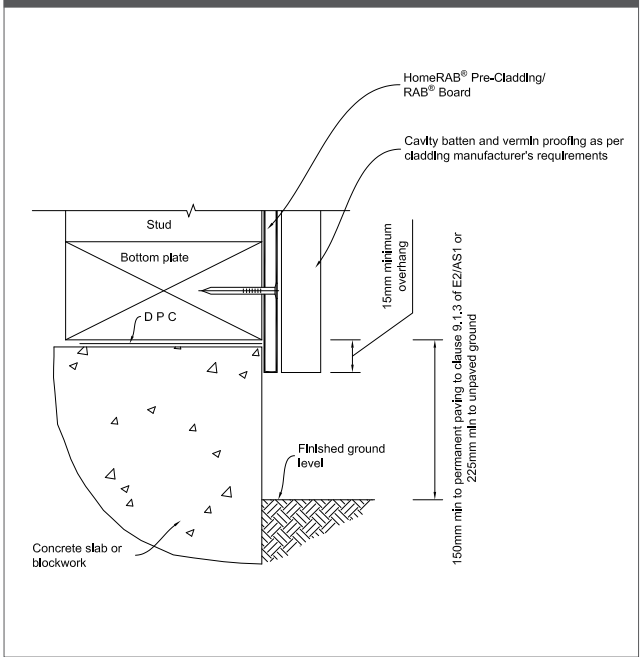

ALPINE REGIONS

In regions subject to freeze/thaw conditions, James Hardie rigid air barriers must not be in direct contact with snow or ice build up e.g. external walls in alpine regions subject to snow drifts over winter. James Hardie rigid air barriers have been tested to resist freeze thaw in accordance with AS/NZS 2908.2 clause 8.2.3 requirements and is suitable for use in alpine regions.

6 Product information

GENERAL

HomeRAB Pre-Cladding and RAB Board are cellulose fibre reinforced cement building products. The basic composition is Portland cement, ground sand, cellulose fibre and water.

RAB Board is easily identified by the name RAB Board printed on the back face. It has green colour water repellant sealer applied on its front face.

HomeRAB Pre-Cladding is easily identified by the name 'HomeRAB Pre-Cladding' on the front face. It has green colour water repellent sealer applied on its front face. The name is also printed on the back face of the lining.

HomeRAB Pre-Cladding and RAB Board are manufactured to conform to the requirements of AS/NZS 2908.2 'Cellulose-Cement Products Part 2: Flat Sheet (ISO 8336).

HomeRAB Pre-Cladding and RAB Board are classified Type B, Category 3 in accordance with AS/NZS 2908.2.

For Safety Data Sheets (SDS) visit www.jameshardie.co.nz or Ask James Hardie on 0800 808 868.

DURABILITY

Resistance to Moisture/Rotting

James Hardie rigid air barriers have been assessed for permanent moisture induced deterioration (rotting) and have met the expectation of AS/NZS 2908.2.

Resistance to Fire

James Hardie rigid air barriers have been tesed/assessed and are classified as Non-Combustible Material.

7 Finishes and maintenance

The selected cladding must be installed and finished within 90 days after the installation of James Hardie rigid air barriers, and the cladding must comply with the requirements of the NZBC. Regular cleaning and maintenance of claddings paints, joints, junctions, penetrations, flashings etc must be carried out at regular intervals and as per the requirements of the material manufacturers. Regular maintenance of cladding is also a requirement under the NZBC.

The ground clearances required for the James Hardie rigid air barriers and the cladding must always be maintained.

Notes

Notes

Product Warranty

James Hardie®
RIGID AIR BARRIERS

April 2016

James Hardie New Zealand ("James Hardie") warrants for a period of 15 years from the date of purchase that the HomeRAB® Pre-Cladding/RAB® Board (the "Product"), will be free from defects due to defective factory workmanship or materials and, subject to compliance with the conditions below, will be resistant to cracking, rotting, fire and damage from termite attacks to the extent set out in James Hardie's relevant published literature current at the time of installation. James Hardie warrants for a period of 15 years from the date of purchase that the accessories supplied by James Hardie will be free from defects due to defective factory workmanship or materials. Nothing in this document shall exclude or modify any legal rights a customer may have under the Consumer Guarantees Act or otherwise which cannot be excluded or modified at law.

CONDITIONS OF WARRANTY:

The warranty is strictly subject to the following conditions:

a) James Hardie will not be liable for breach of warranty unless the claimant provides proof of purchase and makes a written claim either within 30 days after the defect would have become reasonably apparent or, if the defect was reasonably apparent prior to installation, then the claim must be made prior to installation;

b) this warranty is not transferable;

c) the Product must be installed and maintained strictly in accordance with the relevant James Hardie literature current at the time of installation and must be installed in conjunction with the components or products specified in the literature. Further, all other products, including coating and jointing systems, applied to or used in conjunction with the Product must be applied or installed and maintained strictly in accordance with the relevant manufacturer's instructions and good trade practice;

d) the project must be designed and constructed in strict compliance with all relevant provisions of the current New Zealand Building Code ("NZBC"), regulations and standards;

e) the claimant's sole remedy for breach of warranty is (at James Hardie's option) that James Hardie will either supply replacement product, rectify the affected product or pay for the cost of the replacement or rectification of the affected product;

f) James Hardie will not be liable for any losses or damages (whether direct or indirect) including property damage or personal injury, consequential loss, economic loss or loss of profits, arising in contract or negligence or howsoever arising. Without limiting the foregoing James Hardie will not be liable for any claims, damages or defects arising from or in any way attributable to poor workmanship, poor design or detailing, settlement or structural movement and/or movement of materials to which the Product is attached, incorrect design of the structure, acts of God including but not limited to earthquakes, cyclones, floods or other severe weather conditions or unusual climatic conditions, efflorescence or performance of paint/coatings applied to the Product, normal wear and tear, growth of mould, mildew, fungi, bacteria, or any organism on any Product surface or Product (whether on the exposed or unexposed surfaces);

g) all warranties, conditions, liabilities and obligations other than those specified in this warranty are excluded to the fullest extent allowed by law;

h) if meeting a claim under this warranty involves re-coating of Products, there may be slight colour differences between the original and replacement Products due to the effects of weathering and variations in materials over time.

Disclaimer: The recommendations in James Hardie's literature are based on good building practice, but are not an exhaustive statement of all relevant information and are subject to conditions (c), (d), (f) and (g) above. James Hardie has tested the performance of the HomeRAB® Pre-Cladding/RAB® Board when installed in accordance with the HomeRAB® Pre-Cladding/RAB® Board installation manual in accordance with the standards and verification methods required by the NZBC and those test results demonstrate the product complies with the performance criteria established by the NZBC. However, as the successful performance of the relevant system depends on numerous factors outside the control of James Hardie (e.g. quality of workmanship and design) James Hardie shall not be liable for the recommendations made in its literature and the performance of the relevant system, including its suitability for any purpose or ability to satisfy the relevant provisions of the NZBC, regulations and standards, as it is the responsibility of the building designer to ensure that the details and recommendations provided in the relevant James Hardie installation manual are suitable for the intended project and that specific design is conducted where appropriate.

Copyright April 2016. © James Hardie New Zealand. TM and ® denotes a Trademark or Registered Mark owned by James Hardie Technology Limited.

James Hardie
a smarter way™

Ask James Hardie™ | Call 0800 808 868 | jameshardie.co.nz

Copyright April 2016. © James Hardie New Zealand. TM and ® denotes a Trademark or Registered Mark owned by James Hardie Technology Limited.

BRANZ Appraised

Appraisal No. 447 [2010]

LINEA® WEATHERBOARD CAVITY CLADDING

Appraisal No. 447 (2010)

Amended 01 March 2016

BRANZ Appraisals

Technical Assessments of products for building and construction.

James Hardie New Zealand

PO Box 12 070

Penrose

Auckland

Tel: 0800 808 868

Fax: 0800 808 988

Web: www.jameshardie.co.nz

BRANZ

1222 Moonshine Rd,
RD1, Porirua 5381
Private Bag 50 908
Porirua 5240,
New Zealand
Tel: 04 237 1170
branz.co.nz

Product

1.1 Linea® Weatherboard Cavity Cladding is a cavity-based bevelbacked fibre cement weatherboard wall cladding. It is designed to be used as part of an external cladding system for residential and light commercial type buildings where domestic construction techniques are used.

1.2 Linea® Weatherboard Cavity Cladding consists of Linea® Weatherboard, which is a bevelbacked fibre cement weatherboard, fixed over timber battens to form the cavity. The cladding is finished with a latex paint system.

1.3 The cladding incorporates a primary and secondary means of weather resistance (first and second line of defence) against water penetration by separating the cladding from the external wall framing with a nominal 20 mm cavity. The cavity allows for any occasional ingress of water that may get past the external skin to drain to the exterior of the building, and any remaining moisture to dry by evaporation.

Scope

2.1 Linea® Weatherboard Cavity Cladding has been appraised as an external wall cladding for buildings within the following scope:

- the scope limitations of NZBC Acceptable Solution E2/AS1, Paragraph 1.1; and,
- constructed with timber framing complying with the NZBC; and,
- with a risk score of 0-20, calculated in accordance with NZBC Acceptable Solution E2/AS1, Table 2; and,
- situated in NZS 3604 Wind Zones up to, and including Extra High.

2.2 Linea Weatherboard Cavity Cladding has also been appraised for weathertightness and structural wind loading when used as an external horizontally fixed wall cladding solution for buildings within the following scope:

- the scope limitations of NZBC Acceptable Solution E2/AS1, Paragraph 1.1 with regards to building height and floor plan area; and,
- constructed with timber framing complying with the NZBC; and,
- situated in specific design wind pressures up to a maximum design differential ultimate limit state (ULS) of 2.5 kPa.

2.3 Linea® Weatherboard must only be installed horizontally on vertical surfaces.

2.4 Linea® Weatherboard Cavity Cladding is appraised for use with aluminium window and door joinery that is installed with vertical jambs and horizontal heads and sills. *(The Appraisal of Linea® Weatherboard Cavity Cladding relies on the joinery meeting the requirements of NZS 4211 for the relevant Wind Zone.)*

(Note: Linea® Weatherboard Cavity Cladding can be used to provide fire resistance rated construction, but these aspects have not been assessed by this Appraisal and are outside its scope.)

Readers are advised to check the validity of this Appraisal by referring to the Valid Appraisals listing on the BRANZ website, or by contacting BRANZ.

Building Regulations

New Zealand Building Code (NZBC)

3.1 **In the opinion of BRANZ, Linea® Weatherboard Cavity Cladding if designed, used, installed and maintained in accordance with the statements and conditions of this Appraisal, will meet the following provisions of the NZBC:**

Clause B1 STRUCTURE: Performance B1.3.1, B1.3.2 and B1.3.4. Linea® Weatherboard Cavity Cladding meets the requirements for loads arising from self-weight, earthquake, wind, impact and creep [i.e. B1.3.3 (a), (f), (h), (j) and (q)]. See Paragraphs 9.1 - 9.3.

Clause B2 DURABILITY: Performance B2.3.1 (b), 15 years and B2.3.2. Linea® Weatherboard Cavity Cladding meets these requirements. See Paragraphs 10.1 and 10.2.

Clause C3 FIRE AFFECTING AREAS BEYOND THE FIRE SOURCE: Performance C3.7. Linea® Weatherboard Cavity Cladding meets this requirement. See Paragraph 12.1.

Clause E2 EXTERNAL MOISTURE: Performance E2.3.2. Linea® Weatherboard Cavity Cladding meets this requirement. See Paragraphs 14.1 - 14.5.

Clause F2 HAZARDOUS BUILDING MATERIALS: Performance F2.3.1. Linea® Weatherboard Cavity Cladding meets this requirement and will not present a health hazard to people.

3.2 This is an Appraisal of an **Alternative Solution** in terms of New Zealand Building Code compliance.

Technical Specification

4.1 Linea® Weatherboards are bevelback weatherboards with a tongue and groove at each end for jointing. The weatherboards are pre-primed with an acrylic primer on the front face and both edges. Linea® Weatherboards are 16 mm thick and are available 135 mm, 150 mm and 180 mm wide. All boards are supplied 4200 mm long.

4.2 Linea® Weatherboards are manufactured from a reduced density cellulose fibre cement formulation. The boards are formed, cut to length and then cured by high-pressure autoclaving. After autoclaving, a bevel is cut on the back face of the weatherboards, the front edge at the bottom of the board is chamfered and the ends are tongue and grooved for jointing. Linea® Weatherboards are manufactured to meet the requirements of AS/NZS 2908.2.

Accessories

4.3 Accessories used with Linea® Weatherboard Cavity Cladding which are supplied by James Hardie New Zealand are:

- **Axent™ Trim** - a 16 mm thick fibre cement trim manufactured from a reduced density cellulose fibre cement formulation. Axent™ Trim is pre-primed with an acrylic primer on the front face and both edges, and is available in sizes of 84 mm and 100 mm wide by 2600 mm long.
- **External and internal corner mouldings** - chromate treated aluminium external box corner, 90° internal corner 'W' mould and 135° internal corner 'W' mould. The mouldings are available in 2700 mm and 4000 mm lengths.
- **Corner soakers** - 90° soakers are available for 135 mm, 150 mm and 180 mm Linea® Weatherboards. The soakers are available in chromate treated aluminium, copper and stainless steel.
- **Cavity vent strip** - uPVC, available in 3000 mm lengths.

4.4 Accessories used with Linea® Weatherboard Cavity Cladding which are supplied by the building contractor are:

- **Flexible wall underlay** – building paper complying with NZBC Acceptable Solution E2/AS1 Table 23, or breather-type membranes covered by a valid BRANZ Appraisal for use as wall underlays.
- **Flexible building underlay support** – polypropylene strap, 75 mm galvanised mesh, galvanised wire, or additional vertical battens for securing the flexible building underlay in place and preventing bulging of the bulk insulation into the drainage cavity. *(Note: mesh and wire galvanising must comply with AS/NZS 4534.)*

Readers are advised to check the validity of this Appraisal by referring to the Valid Appraisals listing on the BRANZ website, or by contacting BRANZ.

- **Rigid wall underlay** – Plywood or fibre cement sheet complying with NZBC Acceptable Solution E2/AS1, Table 23, or rigid sheathing covered by a valid BRANZ Appraisal for use as rigid air barrier systems.
- **Flexible sill, head and jamb flashing tape** - flexible flashing tapes complying with NZBC Acceptable Solution E2/AS1, Paragraph 4.3.11, or flexible flashing tapes covered by a valid BRANZ Appraisal for use around window and door joinery openings.
- **Cavity battens** - nominal 50 mm wide by 25 mm thick (minimum finished size of 45 mm wide by 18 mm thick) timber treated to Hazard Class H3.1.
- **Joinery head flashings** - folded from aluminium or galvanised steel to suit the window or door trim opening. Refer to NZS 3604, Section 4 and NZBC Acceptable Solution E2/AS1, Table 20 for durability requirements.
- **Planted sill and scribers** - timber treated to Hazard Class H3.1, pre-primed before installation.
- **Window and door trim cavity air seal** - air seals complying with NZBC Acceptable Solution E2/AS1, Paragraph 9.1.6, or self-expanding, moisture cure polyurethane foam air seals covered by a valid BRANZ Appraisal suitable for use around window, door and other wall penetration openings.
- **Flexible sealant** - sealant complying with NZBC Acceptable Solution E2/AS1, or sealant covered by a valid BRANZ Appraisal for use as a weather sealing sealant for exterior use.
- **Cavity batten fixings** - 40 x 2.8 mm flat head hot-dip galvanised nails.
- **Linea® Weatherboard fixings** - 60 x 3.15 mm flat head hot-dip galvanised HardieFlex nails or stainless steel ring shank HardieFlex nails (for concealed nailing in NZS 3604 wind zones up to and including Very High), 75 x 3.15 mm jolt head hot-dip galvanised nails or stainless steel ring shank nails (for face nailing in NZS 3604 wind zones up to and including Very High), and 90 x 4.0 mm jolt head hot-dip galvanised nails or stainless steel ring shank nails (for face nailing in the NZS 3604 Extra High Wind Zone and specific design wind pressures up to a maximum design differential ULS of 2.5 kPa).
- **Axent™ Trim fixings** - 60 x 3.15 mm or 75 x 3.15 mm hot-dip galvanised jolt head nails and stainless steel ring shank jolt head nails.

(Note: Stainless steel fixings must be Grade 316 and hot-dip galvanising must comply with AS/NZS 4680).

Paint System Specification

4.5 Paint systems are not supplied by James Hardie New Zealand and have not been assessed, therefore they are outside the scope of this Appraisal.

4.6 All exposed faces, including top edges at sills and all bottom edges of Linea® Weatherboard, Axent™ Trim and accessories must be finished with a latex exterior paint system complying with any of Parts 7, 8, 9, or 10 of AS 3730.

Handling and Storage

5.1 Handling and storage of all materials supplied by James Hardie New Zealand or the building contractor, whether on site or off site, is under the control of the building contractor. Linea® Weatherboards must be stacked flat, off the ground and supported on a level platform. They must be kept dry at all times either by storing under cover or providing waterproof covers to the stack. Care must be taken to avoid damage to edges, ends and surfaces. Weatherboards must always be carried on edge.

5.2 Accessories must be stored so they are kept clean, dry and undamaged. All accessories must be used within the maximum storage period recommended by the manufacturer.

Technical Literature

6.1 Refer to the Appraisals listing on the BRANZ website for details of the current Technical Literature for Linea® Weatherboard Cavity Cladding. The Technical Literature must be read in conjunction with this Appraisal. All aspects of design, use, installation and maintenance contained in the Technical Literature and within the scope of this Appraisal must be followed.

Readers are advised to check the validity of this Appraisal by referring to the Valid Appraisals listing on the BRANZ website, or by contacting BRANZ.

Design Information

Framing

Timber Treatment

7.1 Timber wall framing behind Linea® Weatherboard Cavity Cladding must be treated as required by NZBC Acceptable Solution B2/AS1.

Timber Framing

7.2 Timber framing must comply with NZS 3604 for buildings or parts of a building within the scope limitations of NZS 3604. Buildings or parts of a building outside the scope of NZS 3604 must be to a specific design in accordance with NZS 3603 and AS/NZS 1170. Where specific design is required, the framing must be of at least equivalent stiffness to the framing provisions of NZS 3604. Studs must be at maximum 600 mm centres in Low, Medium, High and Very High Wind Zones and maximum 400 mm centres for the NZS 3604 Extra High Wind Zone and specifically designed buildings. Nogs must be fitted flush between the studs at maximum 800 mm centres (for studs at 600 mm centres) or maximum 1200 mm centres (for studs at 400 mm centres).

7.3 Timber framing must have a maximum moisture content of 24% at the time of the cladding application. *(If weatherboards are fixed to framing with a moisture content of greater than 24% problems may occur at a later date due to excessive timber shrinkage.)*

7.4 Timber wall framing must have a maximum moisture content of 18% before the weatherboards are painted.

General

8.1 When the Linea™ Weatherboard Cavity Cladding is used for specifically designed buildings up to 2.5 kPa ULS wind pressure, only the weathertightness and structural aspects of the cladding are within the scope of this Appraisal. All other aspects of the building need to be specifically designed and are outside the scope of this Appraisal.

8.2 Punchings in the cavity vent strip provide a minimum ventilation opening area of 1000 mm^2 per lineal metre of wall.

8.3 At ground level the bottom edge of Linea® Weatherboards must be kept clear of paved surfaces, such as footpaths, by a minimum of 100 mm and unpaved surfaces by 175 mm in accordance with NZBC Acceptable Solution E2/AS1, Table 18. The ground clearances to finished floor levels as set out in NZS 3604 must be adhered to.

8.4 At balcony, deck or low pitch roof/wall junctions, the bottom edge of Linea® Weatherboards must be kept clear of any adjacent surface, or above the top surface of any adjacent roof flashing by a minimum of 50 mm.

8.5 All external walls of buildings must have barriers to airflow in the form of interior linings with all joints stopped for wind zones up to and including Very High, and rigid underlays for buildings in the Extra High wind zone and specifically designed buildings up to 2.5 kPa design differential ULS wind pressure. Unlined gables and walls must incorporate a rigid sheathing or an air barrier which meets the requirements of NZBC Acceptable Solution E2/AS1, Table 23. For attached garages, wall underlays must be selected in accordance with NZBC Acceptable Solution E2/AS1, Paragraph 9.1.3.4. Where rigid underlays are used, the cavity batten fixing lengths must be increased by a minimum of the thickness of the underlay.

8.6 Where cladding penetrations are wider than the cavity batten spacing, allowance must be made for airflow between adjacent cavities by leaving a minimum gap of 10 mm between the bottom of the vertical cavity batten and the flashing to the opening.

8.7 Where Linea® Weatherboard Cavity Cladding abuts other cladding systems, designers must detail the junction to meet their own requirements and the performance requirements of the NZBC. Details not included within the Technical Literature have not been assessed and are outside the scope of this Appraisal.

Readers are advised to check the validity of this Appraisal by referring to the Valid Appraisals listing on the BRANZ website, or by contacting BRANZ.

Interstorey Junctions

8.8 Inter-storey drained joints must be constructed in accordance with the Technical Literature. Inter-storey drained joints must be provided to limit continuous cavities to the lesser of 2-storeys or 7 metres in height, in accordance with the requirements of NZBC Acceptable Solution E2/AS1, Paragraph 9.1.9.4 (b).

Structure

Mass

9.1 The mass of the 135 mm wide Linea® Weatherboard when installed on the wall is 25.7 kg/m^2 at equilibrium moisture content (EMC). The mass of the 150 mm wide board is 24.9 kg/m^2 at EMC and the mass of the 180 mm wide board is 23.9 kg/m^2 at EMC. Linea® Weatherboard Cavity Cladding is therefore considered a light wall cladding in terms of NZS 3604.

Impact Resistance

9.2 Linea® Weatherboard Cavity Cladding will resist impacts likely to be encountered in normal residential use. The likelihood of impact damage to the cladding when used in light commercial situations should be considered at the design stage, and appropriate protection such as the installation of bollards and barriers provided for vulnerable areas.

Wind Zones

9.3 Linea® Weatherboard Cavity Cladding is suitable for use in all Wind Zones of NZS 3604 up to, and including, Extra High where buildings are designed to meet the requirements of NZBC Acceptable Solution E2/AS1, Paragraph 1.1, or up to 2.5 kPa ULS wind pressure where buildings are specifically designed.

Durability

Serviceable Life

10.1 Linea® Weatherboard Cavity Cladding installations are expected to have a serviceable life of at least 50 years provided the paint coating system is maintained in accordance with this Appraisal to ensure the Linea® Weatherboards and fixings remain dry in service. Linea® Weatherboards must be painted within 3 months of fixing.

10.2 Coastal locations can be very corrosive to fasteners, especially locations within distances of up to 500 m from the sea including harbours, or 100 metres from tidal estuaries and sheltered inlets, and otherwise as shown in NZS 3604, Figure 4.2. These coastal locations are defined in NZS 3604 as Zone D. To achieve a 50 year serviceable life in Zone D, Linea® Weatherboards must be fixed with stainless steel fasteners. Fasteners outside Zone D may be hot-dip galvanised steel.

10.2 Microclimatic conditions, including geothermal hot spots, industrial contamination and corrosive atmospheres, and contamination from agricultural chemicals or fertilisers can convert mildly corrosive atmosphere into aggressive environments for fasteners. The fixing of Linea® Weatherboards in areas subject to microclimatic conditions requires specific design in accordance with NZS 3604, Paragraph 4.2.4, and is outside the scope of this Appraisal.

Maintenance

11.1 Regular maintenance is essential for Linea® Weatherboard Cavity Cladding installations to continue to meet the NZBC durability performance provision and to maximise their serviceable life.

11.2 Annual inspections must be made to ensure that all aspects of the cladding system, including the paint coating system, flashings and any sealed joints remain in a weatherproof condition. Any damaged areas or areas showing signs of deterioration which would allow water ingress must be repaired immediately. Sealant and paint coatings must be repaired in accordance with the sealant or paint coating manufacturer's instructions.

11.3 Regular cleaning (at least annually) of the paint coating surface is recommended to remove grime, dirt and organic growth and to maximise the life and appearance of the coating. Paint systems must be recoated at approximately 7-15 yearly intervals in accordance with the paint manufacturer's instructions.

Readers are advised to check the validity of this Appraisal by referring to the Valid Appraisals listing on the BRANZ website, or by contacting BRANZ.

11.4 Minimum ground clearances as set out in this Appraisal must be maintained at all times during the life of the cladding. *[Failure to adhere to the minimum ground clearances given in this Appraisal and the Technical Literature will adversely affect the long term durability of Linea® Weatherboard Cavity Cladding.]*

Control of External Fire Spread

12.1 Linea® Weatherboard has a peak heat release rate of less than 100 kw/m^2 and a total heat released of less than 25 MJ/m^2 in accordance with NZBC Acceptable Solution C/AS1, Table 5.1. The system is suitable for use on buildings with a SH Risk Group classification, at any distance to the relevant boundary. Linea® Weatherboard is also suitable for use where a non combustible material is specified. When Linea® Weatherboard is finished with a paint coating of not more that 1.0 mm in thickness, the exterior surface finishes requirements of NZBC Acceptable Solutions C/AS2 – C/AS6, Paragraph 5.8.1 do not apply in accordance with NZBC Acceptable Solutions C/AS2 – C/AS6, Paragraph 5.8.2 a).

Prevention of Fire Occurring

13.1 When Linea® Weatherboard Cavity Cladding is finished with a paint coating of not more than 1.0 mm in thickness, clearance separations from chimneys and flues are not required. However, when used in conjunction with, or attached to heat sensitive materials, the heat sensitive material must be separated from chimneys and flues in accordance with the requirements of NZBC Acceptable Solutions C/AS1 - C/AS6, Paragraph 7.5.9 for the protection of combustible materials.

External Moisture

14.1 Linea® Weatherboard Cavity Cladding, when installed in accordance with this Appraisal and the Technical Literature will prevent the penetration of moisture that could cause undue dampness or damage to building elements.

14.2 The cavity must be sealed off from the roof and sub-floor space to meet code compliance with Clause E2.3.5.

14.3 Linea® Weatherboard Cavity Cladding allows excess moisture present at the completion of construction to be dissipated without permanent damage to building elements to meet code compliance with Clause E2.3.6.

14.4 The details given in the Technical Literature for weather sealing are based on the design principle of having a first and second line of defence against moisture entry for all joints, penetrations and junctions. The ingress of moisture must be excluded by detailing joinery and wall interfaces as shown in the Technical Literature. Weathertightness details that are developed by the designer are outside the scope of this Appraisal and are the responsibility of the designer for compliance with the NZBC.

14.5 The use of Linea® Weatherboard Cavity Cladding where there is a designed cavity drainage path for moisture that penetrates the cladding, does not reduce the requirement for junctions, penetrations, etc to remain weather resistant.

Internal Moisture

15.1 Buildings must be constructed with an adequate combination of thermal resistance and ventilation, and space temperature must be provided to all habitable spaces, bathrooms, laundries and other spaces where moisture may be generated or may accumulate.

Water Vapour

15.2 Linea® Weatherboard Cavity Cladding is not a barrier to the passage of water vapour, and when installed in accordance with the Technical Literature and this Appraisal will not create or increase the risk of moisture damage resulting from condensation.

Readers are advised to check the validity of this Appraisal by referring to the Valid Appraisals listing on the BRANZ website, or by contacting BRANZ.

Installation Information

Installation Skill Level Requirements

16.1 Installation of Linea® Weatherboard and accessories supplied by James Hardie New Zealand and the building contractor must be completed by tradespersons with an understanding of cavity construction and bevelback weatherboard installation, in accordance with instructions given within the Linea® Weatherboard Cavity Cladding Technical Literature and this Appraisal.

System Installation

Building Underlay and Flexible Sill and Jamb Tape Installation

17.1 The selected building underlay and flexible sill and jamb tape system must be installed by the building contractor in accordance with the underlay and tape manufacturer's instructions prior to the installation of the cavity battens and the rest of the Linea® Weatherboard Cavity Cladding system. Flexible building underlay must be installed horizontally and be continuous around corners. Underlay must be lapped 75mm minimum at horizontal joints and 150mm minimum over studs at vertical joints. Generic rigid sheathing materials must be installed in accordance with NZBC Acceptable Solution E2/AS1 and be overlaid with a flexible wall underlay. Proprietary systems shall be installed in accordance with the manufacturer's instructions. Particular attention must be paid to the installation of the building underlay and sill and jamb tapes around window and door openings to ensure a continuous seal is achieved and all exposed wall framing in the opening is protected.

Cavity Battens

17.2 Cavity battens must be installed over the building underlay to the wall framing at maximum 600 mm centres where the studs are at 600 mm centres or at 400 mm centres when studs are at 400 mm centres. The battens must be fixed in place with 40 x 2.8 mm hot-dip galvanised flat-head nails at maximum 800 mm centres.

17.3 Where studs are at greater than 400 mm centres, a building underlay support must be installed over the building underlay between the cavity battens at maximum 300 mm centres.

Linea® Weatherboard Installation

17.4 Linea® Weatherboards may be cut on site by power saw. Holes and cut-outs may be formed by drilling a number of holes around the perimeter of the opening required and tapping out the centre with a hammer, or by using a hole saw.

17.5 Weatherboards must be dry prior to installation. Before the weatherboards are installed, cut ends exposed to the exterior such as at aluminium box corners or internal corners must be sealed with an acrylic sealer to reduce the absorbency of the fibre cement.

17.6 Linea® Weatherboards must be installed starting at the bottom of the wall. A cant strip (H3.1 treated timber or fibre cement) must be fixed behind the bottom course of weatherboards to ensure the weatherboards are set at the correct angle. The cant strip must be continuous around the perimeter of the building. The bottom course of weatherboards must overhang the bottom plate by a minimum of 50 mm.

17.7 Before the weatherboards are installed, the corner detail must be prepared to suit the selected option, e.g. external box corner, corner soaker. The necessary flashings, including window flashings, must be installed before commencing weatherboard fixing.

17.8 The first course of weatherboards must be full length, i.e. 4200 mm and commence from an external corner. Jointing of Linea® Weatherboards is made off the stud using the pre-cut tongue and groove joint. Tongue and groove joints may be located centrally between the studs, but must be no closer than 100 mm to the edge of a stud. A bead of sealant must be applied to the front side of the tongue before the corresponding board is inserted. Subsequent courses of weatherboards must be installed so that the tongue and groove joints are staggered by 600 mm minimum from joints in the previous course.

Readers are advised to check the validity of this Appraisal by referring to the Valid Appraisals listing on the BRANZ website, or by contacting BRANZ.

17.9 Linea® Weatherboards must have a minimum lap of 30 mm, and should be set out so as near to a full board as possible will finish under and over windows and doors and at the top of the wall. A storey rod can be used to accurately position weatherboard courses.

17.10 Linea® Weatherboards must be fixed to each stud using concealed fixings behind the lap of the boards or face nailing, except that face nailing must be provided at all corners and vertical edges of openings.

17.11 Concealed fixing must be carried out using 60 x 2.8 mm hot-dip galvanised or stainless steel Hardieflex nails depending on the location - see Paragraph 10.2. Nails must be fixed 25 mm from the top edge of the board and must be driven flush with the board surface.

17.12 Face nailing must be carried out using 75 x 3.15 mm hot-dip galvanised or stainless steel jolt-head nails in NZS 3604 wind zones up to and including Very High, or 90 x 4.0 mm hot-dip galvanised or stainless steel jolt-head nails in the NZS 3604 Extra High Wind Zone and specific design wind pressures up to a maximum design differential ULS of 2.5 kPa, depending on the location - see Paragraph 10.2. Nails must be fixed 15 mm up from the bottom of the board and punched a maximum of 2 mm below the surface of the board. When stainless steel nails are used, the top board at each lap must be pre-drilled.

17.13 Linea® Weatherboards can be hand or gun nailed. Nails must not be closer than 25 mm to the end of the board when hand nailing, or closer than 50 mm when gun nailing. *(Note: Gun nailing must only be used for concealed nailing.)*

Aluminium Joinery Installation

17.14 Aluminium joinery and associated head and sill flashings must be installed by the building contractor in accordance with the Technical Literature. A 7.5 mm nominal gap must be left between the joinery reveal and the wall framing so a PEF rod and air seal can be installed after the joinery has been secured in place.

17.15 After installing the window and door joinery, Axent™ Trim, planted sills and scribers may be installed in accordance with the Technical Literature to provide additional weatherproofing for the joinery/weatherboard junction.

Inspections

17.16 The Technical Literature must be referred to during the inspection of Linea® Weatherboard Cavity Cladding installations.

Finishing

17.17 The paint coating manufacturer's instructions must be followed at all times for application of the paint finish. Linea® Weatherboards and trim must be clean and dry before commencing painting.

Health and Safety

18.1 Cutting of Linea® Weatherboard must be carried out in well ventilated areas, and a dust mask and eye protection must be worn.

18.2 When power tools are used for cutting, grinding or forming holes, health and safety measures as set out in the Technical Literature must be observed because of the amount of dust generated.

18.3 Safe use and handling procedures for Linea® Weatherboard and the components that make up the cladding system are provided in the relevant manufacturer's Technical Literature.

Readers are advised to check the validity of this Appraisal by referring to the Valid Appraisals listing on the BRANZ website, or by contacting BRANZ.

Basis of Appraisal

The following is a summary of the technical investigations carried out:

Tests

19.1 The following testing has been completed by BRANZ:

- BRANZ expert opinion on NZBC E2 code compliance for Linea® Weatherboard Cavity Cladding was based on testing and evaluation of all details within the scope and as stated within this Appraisal. Linea® Weatherboard Cavity Cladding was tested to E2/VM1 (as contained within NZBC Clause E2, Third Edition, Amendment 5). The testing assessed the performance of the foundation detail, window head, jamb and sill details, meterbox head, jamb and sill details, balustrade to wall junction, parapet cap and internal and external corners. In addition to the weathertightness test, the details contained within the Technical Literature have been reviewed, and an opinion has been given by BRANZ technical experts that the system will meet the performance levels of NZBC Acceptable Solution E2/AS1 for drained cavity claddings.
- Uniform wind face load tests to simulate wind pressures on 12 mm thick Linea® Weatherboards were carried out by BRANZ, and the results were used in assessing 16 mm thick Linea® Weatherboard used in Linea® Weatherboard Cavity Cladding.
- Cone Calorimeter testing to determine the peak rate of heat release and total heat release of Linea® Weatherboard was completed by BRANZ. The testing was carried out in accordance with AS/NZS 3837.

19.2 Linea® Weatherboards have been tested by a James Hardie NATA accredited laboratory in accordance with AS/NZS 2908.2. The testing covered: soak-dry, bending strength, warm water soaking, heat/rain, freeze/thaw and apparent density. The test methods and results have been reviewed by BRANZ and found to be satisfactory.

19.3 Testing has been carried out by James Hardie New Zealand to determine the modulus of rupture and inter-laminar bond strength of carbonated and non-carbonated Linea® Weatherboard. The test methods and results have been reviewed by BRANZ and found to be satisfactory.

Other Investigations

20.1 Weathertightness, structural, fire and durability opinions have been provided by BRANZ technical experts.

20.2 Site visits have been carried out by BRANZ to assess the practicability of installation, and to examine completed installations.

20.3 The manufacturer's Technical Literature has been examined by BRANZ and found to be satisfactory.

Quality

21.1 The manufacture of Linea® Weatherboard has been examined by BRANZ, and details regarding the quality and composition of the materials used were obtained by BRANZ and found to be satisfactory.

21.2 The quality of materials, components and accessories supplied by James Hardie New Zealand is the responsibility of James Hardie New Zealand. The quality control system of James Hardie New Zealand has been assessed and registered as meeting the requirements of ISO 9001: 2008.

21.3 Quality on site is the responsibility of the installer.

21.4 Designers are responsible for the building design, and building contractors are responsible for the quality of installation of the building underlay, cavity battens, Linea® Weatherboard and accessories in accordance with the instructions of James Hardie New Zealand.

21.5 Building owners are responsible for the maintenance of Linea® Weatherboard Cavity Cladding in accordance with the instructions of James Hardie New Zealand.

Readers are advised to check the validity of this Appraisal by referring to the Valid Appraisals listing on the BRANZ website, or by contacting BRANZ.

Sources of Information

- AS 3730 Guide to the properties of paints for buildings.
- AS/NZS 1170: 2002 Structural design actions.
- AS/NZS 2908.2: 2000 Cellulose-cement products - Flat sheet.
- AS/NZS 3837: 1998 Method of test for heat and smoke release rates for materials and products using an oxygen consumption calorimeter.
- AS/NZS 4534: 1998 Zinc and zinc/aluminium-alloy coatings on steel wire.
- AS/NZS 4680: 2006 Hot-dip galvanized (zinc) coatings on fabricated ferrous articles.
- NZS 3602: 2003 Timber and wood-based products for use in building.
- NZS 3603: 1993 Timber Structures Standard.
- NZS 3604: 1999 Timber framed buildings.
- NZS 4211: 2008 Specification for performance of windows.
- Compliance Document for New Zealand Building Code External Moisture Clause E2, Department of Building and Housing, Third Edition July 2005.
- Ministry of Business, Innovation and Employment Record of Amendments for Compliance Documents and Handbooks.
- The Building Regulations 1992.

Amendments

Amendment No. 1, dated 31 January 2012.

This Appraisal has been amended to update clause changes as required by the introduction of NZS 3604: 2011 and NZBC Acceptable Solution E2/AS1 Third Edition, Amendment 5.

Amendment No. 2, dated 30 October 2013.

This Appraisal has been amended to change the Appraisal Holder, change the Product Name and to update clause changes as required by the introduction of NZBC Fire Clauses C1 – C6 Protection from Fire and A3 Building Importance Levels.

Amendment No. 3, dated 5 March 2014.

This Appraisal has been amended to alter the scope to include NZS 3604 Wind Zone Extra High, and specific design wind pressures up to and including 2.5 kPa.

Amendment No. 4, dated 01 March 2016.

This Appraisal has been amended to remove the term Scyon®.

Readers are advised to check the validity of this Appraisal by referring to the Valid Appraisals listing on the BRANZ website, or by contacting BRANZ.

In the opinion of BRANZ, Linea® Weatherboard Cavity Cladding is fit for purpose and will comply with the Building Code to the extent specified in this Appraisal provided it is used, designed, installed and maintained as set out in this Appraisal.

The Appraisal is issued only to James Hardie New Zealand, and is valid until further notice, subject to the Conditions of Appraisal.

Conditions of Appraisal

1. This Appraisal:
   a) relates only to the product as described herein;
   b) must be read, considered and used in full together with the Technical Literature;
   c) does not address any Legislation, Regulations, Codes or Standards, not specifically named herein;
   d) is copyright of BRANZ.
2. James Hardie New Zealand:
   a) continues to have the product reviewed by BRANZ;
   b) shall notify BRANZ of any changes in product specification or quality assurance measures prior to the product being marketed;
   c) abides by the BRANZ Appraisals Services Terms and Conditions.
   d) Warrants that the product and the manufacturing process for the product are maintained at or above the standards, levels and quality assessed and found satisfactory by BRANZ pursuant to BRANZ's Appraisal of the product.
3. BRANZ makes no representation or warranty as to:
   a) the nature of individual examples of, batches of, or individual installations of the product, including methods and workmanship;
   b) the presence or absence of any patent or similar rights subsisting in the product or any other product;
   c) any guarantee or warranty offered by James Hardie New Zealand.
4. Any reference in this Appraisal to any other publication shall be read as a reference to the version of the publication specified in this Appraisal.
5. BRANZ provides no certification, guarantee, indemnity or warranty, to James Hardie New Zealand or any third party.

For BRANZ

Pieter Burghout
Chief Executive

Date of Issue:
14 September 2010

Readers are advised to check the validity of this Appraisal by referring to the Valid Appraisals listing on the BRANZ website, or by contacting BRANZ.

CERTIFICATE OF CONFORMITY

This product Certificate is issued under Section 269 of the Building Act 2004 for:

James Hardie Linea® Weatherboard Direct Fixed and Cavity Cladding

Product Description

1. Linea® Weatherboard is a 16 mm thick bevelback fibre cement weatherboard, which is designed to be used as part of an external wall cladding system for residential and light commercial type buildings where domestic construction techniques are used.
2. Linea® Weatherboard Direct Fixed Cladding consists of Linea® Weatherboards applied direct to the external wall framing over a building underlay. Linea® Weatherboard Cavity Cladding consists of Linea® Weatherboards fixed over timber battens to form the cavity. Both cladding methods incorporate secondary protection behind all internal and external corners, flashings for window, door and meter box penetrations as well as air seals to all wall penetrations.
3. Linea® Weatherboard cladding is finished with a latex paint system.

Product purpose and use

1.0 Direct Fixed Construction Method:

1.1 Linea® Weatherboard Direct Fixed Cladding has been assessed as an external wall cladding for buildings within the following scope:

- the scope limitations of New Zealand Building Code (NZBC) Acceptable Solution E2/AS1, Paragraph 1.1; and,
- timber-framed construction complying with the NZBC; and,
- with a risk score of 0-12, calculated in accordance with NZBC Acceptable Solution E2/AS1, Table 2; and,
- situated in NZS 3604:2011 Wind Zones up to, and including Very High.

2.0 Cavity Construction Method:

2.1 Linea® Weatherboard Cavity Cladding has been assessed as an external wall cladding for buildings within the following scope:

- the scope limitations of NZBC Acceptable Solution E2/AS1, Paragraph 1.1; and,
- timber-framed construction complying with the NZBC; and,
- with a risk score of 0-20, calculated in accordance with NZBC Acceptable Solution E2/AS1, Table 2; and,
- situated in NZS 3604:2011 Wind Zones up to, and including Extra High.

2.2 Linea® Weatherboard Cavity Cladding has also been assessed for weathertightness and structural wind loading when used as an external horizontally fixed wall cladding solution for buildings within the following scope:

- the scope limitations of NZBC Acceptable Solution E2/AS1, Paragraph 1.1 with regards to building height and floor plan area; and,
- constructed with timber framing complying with the NZBC; and,
- situated in specific design wind pressures up to a maximum design differential ultimate limit state (ULS) of 2.5 kPa.

3.0 General

3.1 Linea® Weatherboard Direct Fixed and Cavity Cladding must only be installed horizontally on vertical surfaces.

3.2 Linea® Weatherboard Direct Fixed and Cavity Cladding is certified for use with aluminium window and door joinery that is installed with vertical jambs and horizontal heads and sills. (This certification of Linea® Weatherboard Direct Fixed and Cavity Cladding relies on the joinery meeting the requirements of NZS 4211:2008 including amendment 1 for the relevant Wind Zone or design wind pressure.)

4.0 Exclusions

4.1 Linea® Weatherboard Direct Fixed Cladding and Linea® Weatherboard Cavity Cladding can be used to provide structural bracing and fire resistance rated construction, but these aspects have not been assessed and are outside scope of this Certificate.

CodeMark Certification Body		29/9/2010	25/02/2015	29/9/2016	GM-CM30018-RevE
Global-Mark Pty Ltd, Suite 4.07, 32 Delhi Road, North Ryde NSW 2113, Australia www.Global-Mark.com.au	Herve Michoux Managing Director	Date of issue	Last update	Date of next re-certification	Certificate Number

The purpose of construction site audits is to confirm the practicability of installing the product; and to confirm the appropriateness and accuracy of installation instructions. In issuing this Certificate, Global-Mark has relied on the independent expert and/or laboratory advice or reports.
This certificate is issued by Global-Mark Pty Limited, an independent certification body accredited by the product certification accreditation body (JAS-ANZ) appointed by the Chief Executive of the Ministry of Business Innovation and Employment under the Building Act 2004. The Ministry of Business Innovation and Employment does not in any way warrant, guarantee, or represent that the building method or product the subject of this certificate conforms with the New Zealand Building Code, nor accept any liability arising out of the use of the building method or product. The Ministry of Business Innovation and Employment disclaims, to the extent permitted by law, all liability (including negligence) for claims of losses, expenses, damages, and costs arising as a result of the use of the building method(s) or product(s) referred to in this Certificate. This Certificate may only be reproduced in its entirety. It is advised to check that this Certificate of Conformity is currently valid and not withdrawn, suspended or superseded by a later issue by referring to the Ministry of Business Innovation and Employment website, http://www.mbie.govt.nz/.

CERTIFICATE OF CONFORMITY

This product Certificate is issued under Section 269 of the Building Act 2004 for:

James Hardie Linea® Weatherboard Direct Fixed and Cavity Cladding

Certificate Holder

James Hardie New Zealand,
PO Box 12 070, Penrose , New Zealand, Tel: 0800 808 868, www.jameshardies.co.nz

Compliance with the New Zealand Building Code (NZBC):

Linea® Weatherboard if designed, used, installed and maintained in accordance with the scope of this Certificate, the statements and conditions of the supporting Appraisals and the Linea® Weatherboard Technical Specification, dated March 2015 including installation details 1 to 60, will meet the following provisions of the NZBC:

Clause B1 STRUCTURE: Performance B1.3.1, B1.3.2, B1.3.3 (a), (f), (h), (j), (q) and B1.3.4 (a), (b), (c), (d) and (e). Linea® Weatherboard Direct Fixed Cladding and Linea® Weatherboard Cavity Cladding meets the requirements.

Clause B2 DURABILITY: Performance B2.3.1(b) 15 years and B2.3.2. Linea® Weatherboard Direct Fixed Cladding and Linea® Weatherboard Cavity Cladding meets these requirements.

Clause C3 FIRE AFFECTING AREAS BEYOND THE FIRE SOURCE: Performance C3.7 (a). Linea® Weatherboard Direct Fixed Cladding and Linea® Weatherboard Cavity Cladding meets this requirement.

Clause E2 EXTERNAL MOISTURE: Performance E2.3.2. Linea® Weatherboard Direct Fixed Cladding and Linea® Weatherboard Cavity Cladding meets this requirement.

Clause F2 HAZARDOUS BUILDING MATERIALS: Performance F2.3.1. Linea® Weatherboard meets this requirement and will not present a health hazard to people.

Subject to the following conditions and limitations:

1. Subject to regular inspection for soil movement, earthquake or other structural impact or user damage.
2. Maintaining the validity of BRANZ Appraisal No. 446 (2010) (Amended 30 October 2013) Linea® Weatherboard Direct Fixed Cladding and BRANZ Appraisal No. 447 (2010) (Amended 5 March 2014) Linea® Weatherboard Cavity Cladding.

Design Conditions:

1. Product specification and incorporation of the Linea® Weatherboard claddings into the building design shall be carried out by a designer / architect / engineer or a building professional who:

- Is qualified to design the buildings covered under the 'Scope' of use of this product.
- Has ready access to the relevant technical specifications, NZBC, Standards, details and other information related to the cladding method, including the current version of the James Hardie Technical Specification for Linea® Weatherboard as noted within this Certificate.

Product Installation Conditions:

1. Installation shall be carried out by a Licensed Building Practitioner (LBP), or tradespersons with experience in bevelback weatherboard external wall cladding installation who are supervised by a LBP.
2. Installation shall be undertaken in accordance with all relevant technical information related to the selected installation method, including information contained within the current version of the James Hardie Technical Specification for Linea® Weatherboard (dated March 2015), and the relevant BRANZ Appraisal.
3. Upon completion of the installation, the LBP shall complete and sign a Restricted Building Work memorandum and James Hardie Installation Checklist (January 2016) incorporating the Certificate of Installation requirements of the Global-Mark CodeMark Certification Program. The RBW document is to be provided to the Building Consent Authority (BCA) and to the head contractor.

End of the records

James Hardie
a smarter way™

Linea®
WEATHERBOARD

Technical Specification

APRIL 2016 | NEW ZEALAND

Contents

1	**APPLICATION AND SCOPE**	**3**
1.1	Application	3
1.2	Scope	3
1.3	Details	3
1.4	Specific Design	3
2	**DESIGN**	**3**
2.1	Compliance	3
2.2	Responsibility	3
2.3	Site and Foundation	3
2.4	Surface Clearances	4
2.5	Moisture Management	4
2.6	Structure	4
2.7	Wind Loading	4
2.8	Structural Bracing	4
2.9	Fire Rated Walls	4
2.10	Energy Efficiency	4
3	**FRAMING**	**5**
3.1	General	5
3.2	Timber Grade	5
3.3	Durability	5
3.4	Frame Construction	5
3.5	Tolerances	5
4	**PREPARATION**	**6**
4.1	Flexible Underlay or HomeRAB Pre-Cladding	6
4.2	Rigid Air Barrier	6
4.3	Flashing	6
4.4	Vent Strip	6
4.5	Cavity Battens	6
4.6	Intermediate Support	6
4.7	Corners	6
4.8	Junctions and Penetrations	6
5	**FIXING LINEA® WEATHERBOARD**	**7**
5.1	General	7
5.2	Fastener Durability	7
5.3	Nail Sizes and Fixing Method	7
5.4	Gun Nailing	8
6	**JOINTING**	**8**
7	**FINISHING**	**8**
7.1	Preparation and Priming	8
7.2	Sealants	8
7.3	Painting	8
8	**STORAGE AND HANDLING**	**8**
9	**MAINTENANCE**	**9**
10	**PRODUCT INFORMATION**	**9**
10.1	Manufacturing and Classification	9
10.2	Trim	9
10.3	Durability	9
10.4	Product Sizes and Mass	9
10.5	Size and Weight	9
11	**SAFE WORKING PRACTICES**	**10**
12	**PRODUCT SIZES**	**11**
13	**ACCESSORIES**	**12**
14	**DETAILS**	**14**
	PRODUCT WARRANTY	**51**

WE VALUE YOUR FEEDBACK

To continue with the development of our products and systems, we value your input. Please send any suggestions, including your name, contact details, and relevant sketches to:

Ask James Hardie™
Fax 0800 808 988
literaturefeedback@jameshardie.co.nz

CODEMARK™
30018

1 Application and scope

1.1 APPLICATION

Linea® Weatherboard is a 16mm thick, pre-primed bevel back fibre cement weatherboard and is classified as lightweight wall cladding suitable for residential and light commercial construction using timber framed external walls. Linea Weatherboard is available in 135mm, 150mm and 180mm widths.

James Hardie also has available:

- Axent™ Fascia in two widths. Axent Fascia is a 16mm thick, pre-primed fibre cement product designed to accommodate James Hardie soffit linings.
- Axent™ Trim comes in a variety of widths for use as decorative trims around openings and external corners. Axent Trim is a 16mm thick, pre-primed fibre cement product.

Specifier
If you are a specifier or other responsible party for a project ensure that the information in this document is appropriate for the application you are planning and that you undertake specific design and detailing for areas which fall outside the scope of these specifications.

Installer
If you are an installer ensure that you follow the design, moisture management principles, associated figures and material selection provided by the designer and this James Hardie Technical Specification.
All the details provided in this document must be read in conjunction with the specifiers specification.

Make sure your information is up to date
When specifying or installing James Hardie products, ensure you have the current manual. If you're not sure you do, or, if you need more information, visit www.jameshardie.co.nz or Ask James Hardie on 0800 808 868.

1.2 SCOPE

This specification covers the use of Linea Weatherboard on buildings that fall within the scope limitations of the New Zealand Building Code (The NZBC) Acceptable Solution E2/AS1, Paragraph 1.1.

This specification includes the use of Linea Weatherboard in both direct to stud and cavity construction method and must be read in conjunction with the current BRANZ Appraisals for Linea Weatherboard.

This specification also covers the use of Linea Weatherboard in cavity construction for specific design projects (SED) subject to a wind pressure of 2.5kPa (ULS) maximum. This document is intended for use by architects, designers, specifiers or builders who are involved in specifying Linea Weatherboard. The document also serves the purpose of an installation manual for this product.

1.3 DETAILS

Various Linea Weatherboard details are provided in the Details section of this document. This specification and details in CAD file are also available to download from our website at www.jameshardie.co.nz.

1.4 SPECIFIC DESIGN

For use of Linea Weatherboard outside this published scope, the architect, designer or engineer must undertake specific design.

For advice on designs outside the scope of this specification, Ask James Hardie on 0800 808 868.

2 Design

2.1 COMPLIANCE

CODEMARK™ 30018

Linea Weatherboard direct fixed and cavity cladding has been issued a CodeMark certificate number GM-10-30018 which confirms Linea Weatherboard is deemed to comply with the requirements of the NZBC. Please refer to our website www.jameshardie.co.nz for a copy of the CodeMark certificate. Linea Weatherboard also has a BRANZ Appraisal number 446 (2010) and 447 (2010) at www.branz.co.nz or www.jameshardie.co.nz.

2.2 RESPONSIBILITY

The specifier or other party responsible for the project must ensure that the information and details in this specification are appropriate for the intended application and that additional detailing is performed for specific design or any areas that fall outside the scope of this technical specification. For applications outside the scope of this literature and figures which are not provided herein, the architect, designer or engineer must undertake specific design and it should be ensured that the intent of their design meets the requirements of the NZBC.

All dimensions shown are in millimetres unless noted otherwise. All New Zealand Standards referenced in this manual are current edition and must be complied with.

James Hardie conducts stringent quality checks to ensure that any product manufactured falls within our quality spectrum. It is the responsibility of the builder to ensure that the product meets aesthetic requirements before installation. James Hardie will not be responsible for rectifying obvious aesthetic surface variations following installation.

2.3 SITE AND FOUNDATION

The site on which the building is situated must comply with the NZBC Acceptable Solution E1/AS1 'Surface Water'. Foundation design must comply with the requirements of NZS 3604 'Timber-framed Buildings' or be as per specific engineering design.
The grade of adjacent finished ground must slope away from the building to avoid any possibility of water accumulation in accordance with the NZBC requirements.

2.4 SURFACE CLEARANCES

The clearance between the bottom edge of cladding and paved/unpaved ground must comply with section 9.1.3 of E2/AS1. The finished floor level must also comply with these requirements. These clearances must be maintained throughout the life of the building.

Linea Weatherboards must overhang the bottom plate on a concrete slab by a minimum of 50mm as required by the NZBC Acceptable Solution, E2/AS1 Table 18.

On the roofs and decks the minimum clearance must be 50mm.

Do not install external cladding such that it may remain in contact with water or ground.

2.5 MOISTURE MANAGEMENT

It is the responsibility of the specifier to identify moisture related risks associated with any particular building design.

Wall construction design must effectively manage moisture, considering both the interior and exterior environments of the building, particularly in buildings that have a higher risk of wind driven rain penetration or that are artificially heated or cooled. Walls shall include those provisions as required by the NZBC Acceptable Solution E2/AS1 'External Moisture'. In addition, all wall openings, penetrations, junctions, connections, window sills, heads and jambs must incorporate appropriate flashings for waterproofing. The other materials, components and installation methods used to manage moisture in the walls, must comply with the requirements of relevant standards and the NZBC. For information in relation to designing for weathertightness, refer to BRANZ and the Ministry of Business Innovation & Employment (MBIE) updates on the following websites, respectively www.branz.co.nz and www.dbh.govt.nz.

2.6 STRUCTURE

Timber framing must comply with NZS 3604 for buildings or parts of buildings within the scope limitations of NZS 3604. Buildings or parts of buildings outside the scope of NZS 3604 must be to a specific engineering design in accordance with NZS 3603 and AS/NZS 1170. Where specific engineering design is required, the framing stiffness must be equivalent to or more than the framing provisions of NZS 3604. In all cases stud spacing must not exceed 600mm centres maximum for buildings designed to NZS 3604 and 400mm centres maximum for specific engineering design buildings subject to design wind pressures higher than 1.5kPa.

For timber frame walls longer than 12m, it is best practice to allow for construction joints to accommodate movements generated due to timber shrinkage or deflection etc

2.7 WIND LOADING

Linea Weatherboard cladding is suitable for use in all wind zones as defined in NZS 3604. It is also suitable for use in SED buildings exposed to wind pressures up to 2.5kPa (ULS).

For wind pressures higher than those mentioned above, contact James Hardie at 0800 808 868 for assistance.

2.8 STRUCTURAL BRACING

Linea Weatherboard direct fixed installed as per Linea Weatherboard specific bracing details will provide bracing for buildings designed and constructed in accordance with NZS 3604. The Linea Weatherboard bracing systems have been independently tested by SCION using direct fixed construction. The following range of bracings can be achieved

- Wind 75 – 130 BU'S/m
- Earthquake 67 – 101 BU'S/m

Refer to the James Hardie Bracing Design Manual for details.

2.9 FIRE RATED WALLS

Walls clad with Linea Weatherboard using a direct fix or cavity construction method can achieve fire ratings of up to 90/90/90 when constructed in accordance with the James Hardie 'Fire and Acoustic' Design Manual. Linea Weatherboard must be face fixed for Fire Rated applications.

Refer to Fire and Acoustic Design Manual for further information about fire rated systems.

2.10 ENERGY EFFICIENCY

External walls constructed as per this technical specification, using Linea Weatherboard and bulk insulation, where the area of glazing is 30% or less of the total wall area, complies with the minimum R-value requirements for walls as per the NZBC Acceptable Solution H1/AS1 (The NZBC Clause H1 Energy Efficiency), Replacement Table 1. To meet the minimum thermal insulation requirements for the construction, the bulk insulation as specified in Table 1 must be used. This insulation may be substituted with insulation material having higher R-values. Thermal insulation of a wall is affected when the depth of the timber framing is increased or decreased or stud spacing is decreased. The calculation used in Table 1 is based on a timber framing size 90 x 45mm and an internal lining material such as James Hardie Villaboard® Lining or a 10mm plasterboard.

Table 1

Insulation capability		
Climate Zone	**Construction R-Value Requirement**	**Minimum R-Value of Insulation Required**
1 and 2	1.9 m2 °C/W	#R2.0
3	2.0 m2 °C/W	#R2.2

Total construction R-Value depends on the insulation material used and the framing ratio. The insulation material R-Values specified in this table are for studs spaced at 600mm c/c and nogs spaced at 800mm c/c.

To achieve higher construction R-Values the wall insulation material must be replaced with an insulation material having higher R-Values to suit the requirements.

For further guidance on insulation requirement refer to current edition of 'House Insulation Guide' published by BRANZ.

3 Framing

3.1 GENERAL

This Linea Weatherboard technical specification is only suitable for timber-framed buildings. Other framing materials are outside the scope of this specification.

For Steel Framing refer to James Hardie Claddings Installation to Steel Framing Technical Supplement.

3.2 TIMBER GRADE

Timber must be graded in accordance with NZS 3631 'New Zealand Timber Grading Rules'. The timber grade to be used must be in accordance with NZS 3604 requirements.

3.3 DURABILITY

To comply with the NZBC requirements the external framing must be treated to a minimum H1.2 treatment. Refer to the NZBC Acceptable Solution B2/AS1 Durability for further information about the durability requirements. For timber treatment information refer to NZS 3602 (Timber and Wood-Based Products for use in Buildings) and NZS 3640 (Chemical Preservation of Round and Sawn Timber) for minimum timber treatment selection and treatment requirements. Also refer to framing manufacturer's literature for further guidance on timber selection.

Framing must be protected from moisture at sites in accordance with the recommendations of framing manufacturers.

Note: refer to NZS 3602 for information about the allowable moisture content in timber.

3.4 FRAME CONSTRUCTION

For buildings within the scope of NZS 3604 the framing sizes and set-out must comply with NZS 3604 with stud, nog/dwang centres as required by this specification.

In case of gable end trusses sitting on top plates of the external wall frame, the frame size must be in accordance with truss design and specification supplied by the frame and truss manufacturer/supplier supported by independent design producer statement.

3.4.1 Direct fixed construction method

The following framing must be provided for direct fixed construction method:

- Studs must be provided at 600mm centres maximum.
- Nogs must be provided at 1200mm centres maximum.
- Double studs are required at internal corners.
- Extra packers may be required at external corners.
- Extra studs are required for aluminium internal corner sections.

3.4.2 Cavity construction method

The following framing must be provided for cavity construction method:

- When studs are at 600mm centres the nogs must be provided at 800mm centres maximum.
- When studs are at 400mm centres the nogs may be provided at 1200mm centres maximum.
- Double studs are required at internal corners.
- Extra packers may be required at external corners.
- Extra studs are required for aluminium internal corner sections.

3.4.3 Specific Engineering Design (SED)

For EH wind zone and specific engineering design projects the timber framing is required to be designed in accordance with NZS 3603 and AS/NZS 1170. The minimum framing sizes and layout must comply with this specification.

- Stud spacing 400mm centres maximum
- Nog spacing 1200mm centres maximum
- Other requirements as per 3.5.2 above

3.5 TOLERANCES

In order to achieve an acceptable wall finish, it is imperative that framing is straight and true. Framing tolerances must comply with the requirements of NZS 3604 and the manufacturer's specifications. All framing must be made flush.

4 Preparation

4.1 FLEXIBLE UNDERLAY OR HOMERAB PRE-CLADDING

Flexible underlay must be provided as per the requirements of the NZBC Acceptable Solution E2/AS1 'External Moisture' Table 23. The flexible underlay must be fixed in accordance with E2/AS1 and the underlay manufacturer's recommendations. Walls which are not lined on the inside face (e.g. garage walls or gable ends) must include a rigid sheathing or an air barrier behind the cladding which complies with the requirements of the NZBC Acceptable Solution E2/AS1 Table 23. For attached garages, flexible underlays must be selected in accordance with the NZBC Acceptable Solution E2/AS1, Paragraph 9.1.3.4. HomeRAB Pre-Cladding is suitable for use in these applications. It must be installed in accordance with James Hardie Rigid Air Barriers installation manual.

4.2 RIGID AIR BARRIER

For EH wind zone or Specific Engineering Design (SED) projects where the design wind pressures are between 1.5kPa (ULS) and 2.5kPa (ULS), RAB Board (6mm) must be used. Refer to James Hardie Rigid Air Barriers installation manual for information regarding its installation.

4.3 FLASHING

All wall openings, penetrations, intersections, connections, window sills, heads and jambs must be flashed prior to weatherboard installation. Please refer to moisture management requirements in Clause 2.5. The flexible underlay must be appropriately incorporated with penetration and junction flashings. Materials must be lapped in such a way that water tracks down to the exterior on the face of flexible underlay. The selected flashing materials must comply with the durability requirements of Table 20 of the NZBC Acceptable Solution E2/AS1.

4.4 VENT STRIP

The James Hardie uPVC cavity vent strip must be installed at the bottom of all walls constructed using the drained and ventilated cavity construction method. James Hardie uPVC vent strip has an opening area of 1000mm2/m length. It is important that the openings in the vent strip are kept clear and unobstructed to allow free drainage and ventilation of cavities.

4.5 CAVITY BATTENS

Buildings with a risk score of 13-20 calculated in accordance with the NZBC Acceptable Solution E2/AS1 Table 3 require Linea Weatherboards to be installed on a cavity.

The cavity battens provide airspace between the frame and cladding and are considered a "packer" only in this specification.

The timber battens must be minimum H3.1 treated in accordance with NZS 3640 (Chemical Preservation of Round and Sawn Timber) to comply with the durability requirements of B2/AS1.

Cavity battens must comply with E2/AS1 and:

- be minimum 18mm thick.
- be minimum as wide as the width of studs.
- must be fixed by the cladding fixings to the main framing through the flexible underlay.
- fix cavity battens to studs at maximum 600mm centres.
- until claddings are fixed the battens need only to be tacked to framing with 40 x 2.8mm nails at 800mm centres maximum.

(Batten fixing is required temporarily to keep them straight on the wall during construction.)

4.6 INTERMEDIATE SUPPORT

Where studs are at 600mm centres an intermediate means of restraining the flexible underlay and insulation from bulging into the cavity must be installed. An acceptable method to achieve this is using one of the following:

- intermediate cavity batten between the studs; or
- 75mm galvanised mesh; or
- polypropylene tape at 300mm centres fixed horizontally and drawn taut.

No intermediate supports are required:

- where studs are at maximum 400mm centres; or,
- when rigid sheathings instead of flexible underlays are used.

4.7 CORNERS

Anticipated joist shrinkage must be allowed for in the design process. Do not run trims or aluminium extrusions continuously across solid floor joists. There are a number of options to select from when detailing external corners:

- 90º corner soaker in aluminium, copper or stainless steel. Refer to Figures 7 and 33.
- 135º corner soaker 180mm aluminium, contact James Hardie
- Box corners using Axent Trim. Refer to Figures 3, 4 and 30.
- Mitred corners to weatherboards. Refer to Figures 5 and 31.
- Aluminium boxed corners. Refer to Figures 6 and 32.

There are a number of options to select from when detailing internal corners:

- Scribed corner. Refer to Figures 8 and 34.
- 90º or 135º Aluminium W-mould. Refer to Figures 9, 10, 35 and 36.

4.8 JUNCTIONS AND PENETRATIONS

Refer to Clause 2.5 of this specification for moisture management requirements. All windows and doors must be detailed as per the requirements of this specification. James Hardie has developed the window details for Linea Weatherboards which meet the performance requirements of E2 'External Moisture', an approved document of the NZBC. Refer to Figures 11 to 22 and 38 to 51.

5 Fixing Linea Weatherboard

5.1 GENERAL

The horizontal lap of Linea Weatherboards must be 30mm minimum. In certain scenarios you may require to creep up the lap. This must not exceed 33mm. Linea Weatherboards must be kept dry whilst in storage prior to and during fixing. Cut ends which are exposed after installation or where sealant is applied to the boards such as slimline box corners, internal corners, mitred external corners etc, must be primed prior to installation. Dust and loose material must be removed before priming.

A minimum H3.1 treated timber cant strip must be provided to support the bottom board on the wall. Refer to Figure 1 and Figure 26.

5.2 FASTENER DURABILITY

Fasteners must meet the minimum durability requirements of the NZBC. NZS 3604 specifies the requirements for fixing's material to be used in relation to the exposure conditions and are summarised in Table 2.

Table 2

Exposure conditions and nail selection prescribed by NZS 3604

NAIL MATERIAL

Zone D *	Zone C outside sea spray zone and Zone B and Geothermal hot spots	Bracing — All zones
Grade 316 Stainless	Hot-dipped galvanised or 316 stainless	Grade 316 stainless

* (Zone C areas where local knowledge dictates that increased durability is required, appropriate selection shall be made) Microclimate conditions as detailed in NZS 3604, Paragraph 4.2.4 require SED.

Also refer to the NZBC Acceptable Solution 'E2/AS1' Table 20 and 21 for information regarding the selection of suitable fixing materials and their compatibility with other materials.

5.3 NAIL SIZE AND FIXING METHOD

Linea Weatherboards and Axent Trim must be fixed to timber with the types of nails specified in Tables 3 and 4, in accordance with the following requirements:

- Linea Weatherboard can either be face/exposed fixed or concealed fixed.
- Linea Weatherboard must be fixed into studs at maximum 600mm centres. Fixing centres to coincide with stud spacing. Refer to Figure 2 and 28.
- All concealed nails must be driven flush with the board surface.
- When concealed fixing Linea Weatherboards, nails must be driven under the lap of boards, except at all corners and vertical edges of openings where Linea Weatherboards must be face fixed. Refer to Figure 2 and Figure 29.
- Nails must be fixed 25mm from the end of the board when hand nailing. For gun nailing refer to Section 5.4.
- When using concealed fixing method, any gaps that may appear under the lap due to site conditions can be minimised by fixing a jolt head nail through the lap as per the exposed nailing method. Refer to Figure 2 and 29.
- When using concealed fixing method, Linea Weatherboard can also be tied together by face fixing through the lap using 32mm brad nails if desired.
- When face fixing Linea Weatherboard, the upper board must be pre-drilled before fixing with a jolt head nail.

Table 3

Nail requirements for Linea Weatherboards

DIRECT TO STUD FIXING UP TO AND INCLUDING VH WIND ZONE

Concealed Nailing over flexible underlay	
40 x 2.8mm HardieFlex™ nails	Finish flush with the board surface.
Face Nailing over flexible underlay	
60 x 3.15mm jolt head nails	Hot-dipped galvanised jolt head nail with pre-drilling* through the top weatherboard.
	Stainless steel jolt head nail with pre-drilling* through the top weatherboard.
Concealed Nailing over rigid air barrier	
50 x 2.8mm HardieFlex™ nails	Finish flush with the board surface.
Face Nailing over rigid air barrier	
75 x 3.15mm jolt head nails	Hot-dipped galvanised jolt head nail with pre-drilling* through the top weatherboard.
	Stainless steel jolt head nail with pre-drilling* through the top weatherboard.

CAVITY FIXING UP TO AND INCLUDING VH WIND ZONE

Concealed Nailing over flexible underlay	
60 x 3.15mm HardieFlex™ nails	Finish flush with the board surface.
Face Nailing over flexible underlay	
75 x 3.15mm jolt head nails	Hot-dipped galvanised jolt head nail with pre-drilling* through the top weatherboard.
	Stainless steel jolt head nail with pre-drilling* through the top weatherboard.
Concealed Nailing over rigid air barrier	
75 x 3.15mm HardieFlex™ nails	Finish flush with the board surface.
Face Nailing over rigid air barrier	
90 x 4.0mm jolt head nails	Hot-dipped galvanised jolt head nail with pre-drilling* through the top weatherboard.
	Stainless steel jolt head nail with pre-drilling* through the top weatherboard.

CAVITY FIXING EH WIND ZONE AND SED PROJECTS (1.5KPA - 2.5KPA WIND PRESSURE)

Face Nailing	
90 x 4.0mm jolt head nail	Hot-dipped galvanised jolt head nail with pre-drilling** through the top weatherboard.
	Stainless steel shank jolt head nail with pre-drilling** through the top weatherboard.

Table 4

Nail requirements for trim	
Single Thickness	60mm jolt head nails. If fixing over Linea Weatherboard use predrilled* 75 x 3.15mm jolt head nails.
Double Thickness	60mm jolt head nails.
Single plus packer	If fixing over Linea Weatherboard use 75 x 3.15mm jolt head nails through a pre-drilled* hole. When fixing to timber support use 60mm jolt head nails.

* Use a 3.0mm drill bit. ** Use a 3.5mm drill bit

Note: Special fixing arrangements are required for bracing and fire-resistance rated wall systems. For more information Ask James Hardie on 0800 808 868.

5.4 GUN NAILING

Linea Weatherboard can also be gun-nailed with a D head or RounDrive nail when concealed fixing method is used.

- Gun-nailing must not be used when Linea Weatherboard is used for bracing.
- Nails must be no closer than 50mm from the ends of boards when gun nailing is used — double studs will be required.
- Be minimum length and gauge as per Table 3.
- Be finished flush with surface of board.

6 Jointing

The ends of Linea Weatherboards are jointed off-stud by means of a tongue and groove joint. Tongue and groove joints may be located centrally between studs but no closer than 100mm from the edge of a stud. The joints must be staggered by 600mm minimum. Flexible sealant must be applied in the tongue and groove joint at the time of installation.

7 Finishing

Note: Protective coating of Linea Weatherboard and Axent Trim is required in order to meet the durability requirements of the NZBC.

7.1 PREPARATION AND PRIMING

The Linea Weatherboard and Axent Trim must be dry before painting. Punch and fill all exposed nails a maximum of 2mm below the surface. Fill the hole with an exterior grade builders fill, allow to cure and sand smooth ready for priming. Prime the filled holes in accordance with paint manufacturer's specifications.

It is not recommended to seal under the lap of weatherboards as it helps circulation of air behind the weatherboard cladding.

7.2 SEALANTS

All sealants must demonstrate the ability to meet the relevant requirements of the NZBC and hold a current BRANZ Appraisal. Application and use of sealants must comply with manufacturer's instructions. Sealants, if coated, must be compatible with the paint system.

7.3 PAINTING

All Linea Weatherboards are pre-primed on their face and bottom edge with a factory applied acrylic base coat.

Linea Weatherboard must be painted within 90 days of installation. There is no restriction on the LRV of paint to be applied on the Linea Weatherboard. All exposed faces, including the top edges under the sills and bottom edges of Linea Weatherboard, Axent Trim and accessories must be finished with latex exterior paint system complying with any of parts 7, 8, 9, and 10 of AS 3730.

Dark coloured paints can be used on Linea Weatherboard and Trim. The dark colours in certain environments may fade over a period of time. Special paints/coatings are required in certain harsh environments.

Stainless steel soakers are generally left natural. For painting over stainless steel soakers, refer to paint manufacturer as special preparation and paints are required.

8 Storage and handling

Paint selection and the preparation required is dependant on paint chosen. Refer to the paint manufacturer for information before starting painting.

Linea Weatherboards and Axent Trim must be laid flat on a smooth level surface. To ensure optimum performance, store weatherboards under cover and keep dry prior to fixing. If the weatherboards should become wet, allow to dry thoroughly before fixing. Do not carry weatherboards on the flat, carry in the vertical position to avoid excessive bending.

9 Maintenance

The extent and nature of maintenance will depend on the geographical location and exposure of the building. It is the responsibility of the specifier to determine normal maintenance requirements to comply with The NZBC Acceptable Solution B2/AS1. As a guide, it is recommended that basic normal maintenance tasks shall include but not be limited to:

- Washing down exterior surfaces every 6-12 months*,
- Re-applying exterior protective finishes**,
- Maintaining the exterior envelope and connections including joints, penetrations, flashings and sealants,
- Cleaning out gutters, blocked pipes and overflows as required,
- Pruning back vegetation close to or touching the building,
- The clearances between the bottom edge of Linea Weatherboard and the finished/unfinished ground must always be maintained.
- Stainless steel soakers used in extreme coastal conditions or in sea spray zones may show some signs of 'tea staining'. It is an aesthetic issue and to minimise staining soaker must be washed/polished frequently.

*Do not use a water blaster to wash down the cladding.

*In extreme coastal conditions or sea spray zones, wash every 3-4 months.

**Refer to your paint manufacturer for washing down and recoating requirements related to paint performance.

10 Product information

10.1 MANUFACTURING AND CLASSIFICATION

James Hardie New Zealand is an ISO 9001 Telarc certified manufacturer. Linea Weatherboard and Axent Trim are manufactured to meet the requirements of AS/NZS 2908.2: 2000 'Cellulose-Cement Products', Linea Weatherboard has a classification of Type A Category 3 in accordance with this Standard. Linea Weatherboard is an advanced lightweight cement composite building product incorporating James Hardie proprietary Scyon technology. The basic composition of product is Portland cement, ground sand, cellulose fibre and water.

Linea Weatherboard has a bevel back and tongue and groove at the ends for jointing. The bottom front edge of Linea Weatherboard is chamfered. The weatherboards are supplied pre-primed on their face and bottom edge with an acrylic primer.

Linea Weatherboards and Axent Trim are identified by the printing at regular intervals of the name Linea on the back face.

10.2 JAMES HARDIE TRIM

The Axent Trim, used for box corners, around windows and doors as well as special architectural features, is also made with the CLD technology and is supplied pre-primed with an acrylic primer.

10.3 DURABILITY

Linea Weatherboard and Axent Trim, when installed and maintained as per the technical specification, will meet the durability requirements for claddings as required in the NZBC Approved Document B2 'Durability'.

10.3.1 Resistance to moisture/rotting

Linea Weatherboard and Axent Trim have demonstrated resistance to permanent moisture-induced deterioration (rotting) and has passed the following tests in accordance with AS/NZS 2908.2:

- Water Permeability (Clause 6.2)
- Warm Water (Clause 6.4)
- Heat Rain (Clause 6.5)
- Soak Dry (Clause 6.6).
- Freeze-Thaw (Clause 8.2.3)

10.3.2 Control of External Fire Spread

Linea Weatherboard meets the requirements of Appendix C C7.1.1 and is classified as 'Non-Combustible Material' which is suitable for use as external wall cladding and complies with the requirements of Paragraph 5.4 of the NZBC Acceptable Solution C/AS1 and Paragraph 5.8.1 of Acceptable Solutions C/AS2 to C/AS6 of the NZBC.

10.3.3 Alpine regions

In regions subject to freeze/thaw conditions, Linea Weatherboard must not be in direct contact with snow or ice build up for extended periods, e.g. external walls in alpine regions subject to snow drifts over winter.

The Linea Weatherboard has been tested in accordance with AS/NZS 2908.2 Clause 8.2.3.

10.4 PRODUCT SIZES AND MASS

Available sizes of Linea Weatherboard and Axent Trim and its weight are given in Table 6.

10.5 SIZE AND WEIGHT

Linea Weatherboard is categorised as a Light Weight Wall Cladding as described in NZS 3604. Physical properties of Linea Weatherboard and Axent Trim are provided in Table 6.

11 Safe working practices

WARNING — DO NOT BREATHE DUST AND CUT ONLY IN WELL VENTILATED AREA

James Hardie products contain sand, a source of respirable crystalline silica which is considered by some international authorities to be a cause of cancer from some occupational sources. Breathing excessive amounts of respirable silica dust can also cause a disabling and potentially fatal lung disease called silicosis, and has been linked with other diseases. Some studies suggest smoking may increase these risks. During installation or handling: (1) work in outdoor areas with ample ventilation; (2) minimise dust when cutting by using either 'Score and Snap' knife, fibre cement shears or, where not feasible, use a HardieBlade™ Saw Blade and dust-reducing circular saw attached to a HEPA vacuum; (3) warn others in the immediate area to avoid breathing dust; (4) wear a properly-fitted, approved dust mask or respirator (e.g. P1 or P2) in accordance with applicable government regulations and manufacturer instructions to further limit respirable silica exposures. During clean-up, use HEPA vacuums or wet cleanup methods — never dry sweep. For further information, refer to
our installation instructions and Safety Data Sheets available at www.jameshardie.co.nz.

FAILURE TO ADHERE TO OUR WARNINGS, SAFETY DATA SHEETS, AND INSTALLATION INSTRUCTIONS MAY LEAD TO SERIOUS PERSONAL INJURY OR DEATH.

James Hardie recommended safe working practices
CUTTING OUTDOORS
1. Position cutting station so wind will blow dust away from the user or others in working area. 2. Use one of the following methods based on the required cutting rate: **BEST** • Dust reducing circular saw equipped with HardieBlade™ Saw Blade and HEPA vacuum extraction. **GOOD** • Dust reducing circular saw with HardieBlade™ Saw Blade.
SANDING/REBATING/DRILLING/OTHER MACHINING
When sanding, rebating, drilling or machining you should always wear a P1 or P2 dust mask and warn others in the immediate area.
IMPORTANT NOTES
1. For maximum protection (lowest respirable dust production), James Hardie recommends always using "Best" — level cutting methods where feasible. 2. NEVER use a power saw indoors. 3. NEVER use a circular saw blade that does not carry the HardieBlade™ logo. 4. NEVER dry sweep — Use wet suppression or HEPA vacuum. 5. NEVER use grinders. 6. ALWAYS follow tool manufacturers' safety recommendations.
P1 or P2 respirators should be used in conjunction with above cutting practices to further reduce dust exposures. Additional exposure information is available at www.jameshardie.co.nz to help you determine the most appropriate cutting method for your job requirements. If concern still exists about exposure levels or you do not comply with the above practices, you should always consult a qualified industrial hygienist or contact James Hardie for further information.

Working instructions

Refer to recommended Safe Working Practices before starting any cutting or machining of product.

HardieBlade™ Saw Blade

The HardieBlade™ Saw Blade used with a dust-reducing saw connected to a HEPA vacuum is ideal for fast, clean cutting of James Hardie fibre cement products. A dust-reducing saw uses a dust deflector or a dust collector connected to a vacuum system. When sawing, clamp a straight-edge to the sheet as a guide and run the saw base plate along the straight edge when making the cut.

Hole-forming

For smooth clean cut circular holes:

Mark the centre of the hole on the sheet.

Pre-drill a pilot hole.

Using the pilot hole as a guide, cut the hole to the appropriate diameter with a hole saw fitted to a heavy duty electric drill.

For irregular holes:

Small rectangular or circular holes can be cut by drilling a series of small holes around the perimeter of the hole then tapping out the waste piece from the sheet face.

Tap carefully to avoid damage to sheets, ensuring that the sheet edges are properly supported.

Storage and handling

All James Hardie building products should be stored to avoid damage, with edges and corners of the sheets protected from chipping.

James Hardie building products must be installed in a dry state and be protected from rain during transport and storage. The product must be laid flat under cover on a smooth level surface clear of the ground to avoid exposure to water or moisture, etc.

Quality

James Hardie conducts stringent quality checks to ensure that any product manufactured falls within our quality spectrum. It is the responsibility of the builder to ensure that the product meets aesthetic requirements before installation. James Hardie will not be responsible for rectifying obvious aesthetic surface variations following installation.

12 Product sizes

Table 6

Linea Weatherboard and Axent Trim sizes

						Coverage Information			
Product	Length (mm)	Width (mm)	Thickness (mm)	End Details	Effective Cover (mm)	No. of planks/ metre height (approx.)	Mass kg/lineal m (approx. at EMC)	Mass kg/m^2 (approx. at EMC)	Weight/ packs (60 units/ pack)
Linea Weatherboard 135	4200*	135	16	T & G	105	9.5	2.62	25.70	660.00
Linea Weatherboard 150	4200*	150	16	T & G	120	8.3	3.1	24.93	781.00
Linea Weatherboard 180	4200*	180	16	T & G	150	6.7	3.57	23.92	899.00
Axent Trim 84mm	2600	84	16	Square	N/A	N/A	1.6	N/A	N/A
Axent Trim 100mm	2600	100	16	Square	N/A	N/A	1.9	N/A	N/A

*Length is 4200mm plus 5mm for the tongue and groove making overall length 4205mm

*The effective thickness of finished Linea Weatherboard on the wall at the lap is approximately 33 to 35mm

NOTE: All dimensions and masses provided are approximate only and are subject to manufacturing tolerances.

13 Accessories

Table 7

Accessories/Tools supplied by James Hardie			
Accessories	**Description**	**Size (mm)**	**Code**
	External corner soaker 90º for Linea Weatherboards 180mm • Aluminium • Copper • Stainless Steel	200 long	 **301186** **301188** **301197**
	External corner soaker 135º for Linea Weatherboards 180mm • Aluminium	200 long	 **301178**
	External corner soaker 90º for Linea Weatherboards 150mm • Aluminium • Stainless Steel	170 long	 **302820** **302821**
	External corner soaker 90º for Linea Weatherboards 135mm • Aluminium • Stainless Steel	155 long	 **301185** **301196**
	External Slimline Box Corner Mould Etched primed aluminium extrusion used to create external corner	2700 long 4000 long	**301195** **305809**
	Box Corner 'Z' Flashing	2700 long	**301203**
	Internal 'W' Mould 90º Etched primed aluminium extrustion used to create 90º internal corner	2700 long 4000 long	**301184** **305807**
	Internal 'W' Mould 135º Etched primed aluminium extrustion used to create 135º internal corner	2700 long	**301183**
	Vent Strip PVC moulding used as vermin proofing	3000 long	**302490**
	JH Corner Under Flashing 50 x 50mm PVC moulding used as under fashing for internal and external corners	3000 long	**303745**
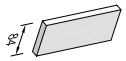	**Axent Trim 84mm**	84 x 2600 long	**401943**
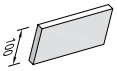	**Axent Trim 100mm**	100 x 2600 long	**401930**
	HardieFlex™ nail - 5kg	60 x 3.15mm	**302782**
	HardieFlex™ nail - 5kg	60 x 3.15mm	**302784**
	HardieBlade™ Saw Blade Diamond tip fibre cement circular saw blade. Spacers not included	4 tooth - 184mm	**300660**
	HardieBlade™ Saw Blade Diamond tip fibre cement circular saw blade. Spacers not included	6 tooth - 254mm	**303375**
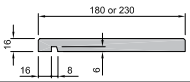	Axent Fascia - 180mm - 230mm	4200 long	**401843** **402230**

Table 8

Accessories not supplied by James Hardie

James Hardie recommends the following products for use in conjunction with its Linea Weatherboard and Axent Trim.
James Hardie does not supply these products. There may also be some other accessories required depending upon the application. Please contact component manufacturer for information on their warranties and further information on their products.

Accessories	Description	Size (MM)	Material/ appearance
	Head flashing Required over window heads to be supplied by window installer. Material must comply with Table 20 and 21 of E2/AS1.	To suit	Etch Primed Aluminium/Powder Coated
	D head or RounDrive Nail Gun nail for concealed fixing Linea Weatherboard.	50 x 2.87 60 x 3.15	Hot Dip Galvanised Stainless Steel
	HardieFlex™ Hot Dip Galv. Nails For fixing cavity battens.	40 x 2.8mm	Hot Dip Galvanised
	Jolt Head Nail for face fixing to Linea Weatherboard. Hot Dip Galvanised or 316 Stainless Steel	50 x 2.8mm 60 x 3.15mm 75 x 3.15mm 90 x 4.0mm	Self colour
	Joint sealant Paintable flexible sealants are recommended for filling the joints. Refer to Section 7.2 for information.	Tube	Sika, Holdfast
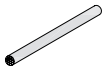	PEF Rod	Polyethylene foam	Sika or similar
	Flexible tape A flexible self-adhesive tape used in preparation of a window. Refer to the Window installation section in this manual for more information. e.g. Tyvek®, Marshall Innovations or similar.	Proprietary tape to adhere to flexible underlay	Tyvek, Marshall Innovations or similar
	Flashing Material as per Table 20, 'E2/AS1'		Flashing Fabricator
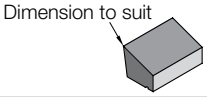	Planted Sill		H3.1 minimum Treated Timber Timber Merchant or cut on site
	Titanium Coated High Speed Drill Bit. For pre-drilling prior to face fixing with jolt head.	3.0mm 3.5mm	
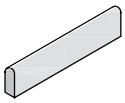	Timber Scriber To scribe beside window, site cut to suit.	As required	H3.1 minimum Treated Timber Timber Merchant or cut on site
	Fibre Cement Cutting Blade Diamond tip 305mm diameter circular saw blade to fit drop saw.	305mm	Diamond Tipped
	Meter Box Refer Electrical Suppliers		
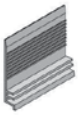	Cant Strip Redway Developments 03 358 5775 Predrill the weatherboards when fixing using Redway Development Cant/Vent Strips	To suit	uPVC
	Inseal 3109 Sealing Strip.	5 x 3mm x 25mm	Black Compressible Foam
	CRC Builders Fill Two part exterior grade fill to finish over jolt head nails.		

14 Details

Various details outlined in the following table are available on Pages 15 to 42.

Table 9

Details				
Description	**Direct fixed**		**Timber Cavity Batten Construction**	
	Figure	**Page**	**Figure**	**Page**
Foundation detail and soffit detail	Figure 1	15		
Weatherboard fixing	Figure 2	15	Figure 30	30
Boxed corner	Figure 3 & 4	16	Figure 31	31
Mitre corner	Figure 5	17	Figure 32	31
Aluminium box corner	Figure 6	17	Figure 33	31
External corner soaker	Figure 7	18	Figure 34	32
Internal corner	Figure 8	18	Figure 35	32
Internal 90º aluminium 'W' mould corner	Figure 9	19	Figure 36	33
Internal 135º aluminium 'W' mould corner	Figure 10	19	Figure 37	33
Window sill with facings			Figure 39	34
Window sill with sill tray and facings	Figure 11	20		
Window door and head with facings	Figure 12	20	Figure 40	35
Window door and jamb with facings	Figure 13	21	Figure 41	35
Window door and sill without facings	Figure 14	21	Figure 42	35
Window door and head without facings	Figure 15	22	Figure 43	36
Window door and jamb without facings	Figure 16	22	Figure 44	36
Head flashing termination	Figure 17	23	Figure 45	37
One piece apron flashing joint	Figure 18	23	Figure 46	37
Pipe penetration	Figure 19	24	Figure 48	38
Meter box at head	Figure 20	24	Figure 49	39
Meter box at sill	Figure 21	25	Figure 50	39
Meter box at jamb	Figure 22	25	Figure 51	40
Timber cavity fix meter box			Figure 52	41
Deck junction	Figure 23	26	Figure 61	47
Cantilevered timber deck junction	Figure 24	27	Figure 62	47
Sloping soffit to weatherboard junction	Figure 25	27	Figure 59	46
Timber cavity batten fixing			Figure 27	28
Foundation detail			Figure 28	29
Soffit detail			Figure 29	29
Batten layout at window opening			Figure 38	34
One piece gutter/wall junction			Figure 47	38
Floating lap over floor joist			Figure 53	42
Drainage joint			Figure 54	43
Enclosed deck balustrade to wall			Figure 55	43
Enclosed balustrade to wall			Figure 56	44
Enclosed deck	Figure 26	28	Figure 57	45
Parapet flashing			Figure 58	45
Sloping soffit and wall junction			Figure 60	46
Door sill support detail			Figure 63	48
Junction between Linea® Weatherboard and fascia board			Figure 64	49
Exclosed roof to wall intersection			Figure 65	50

Figure 1: Direct fix foundation detail and soffit detail

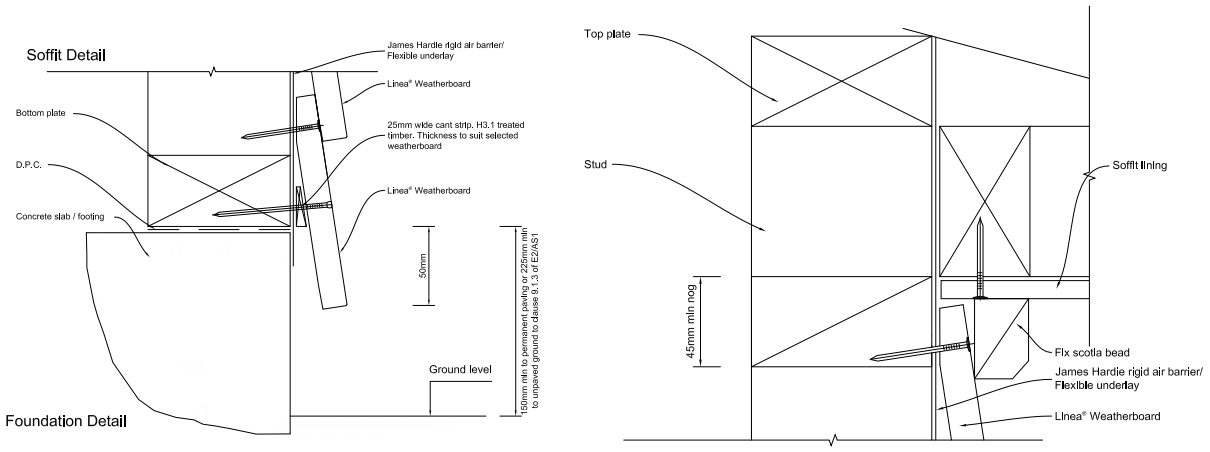

Foundation Detail

Soffit Detail

Figure 2: Direct fix weatherboard fixing

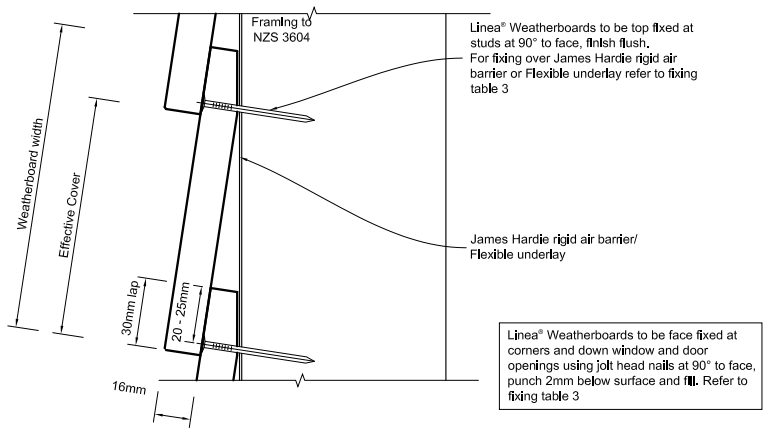

Concealed Nailing

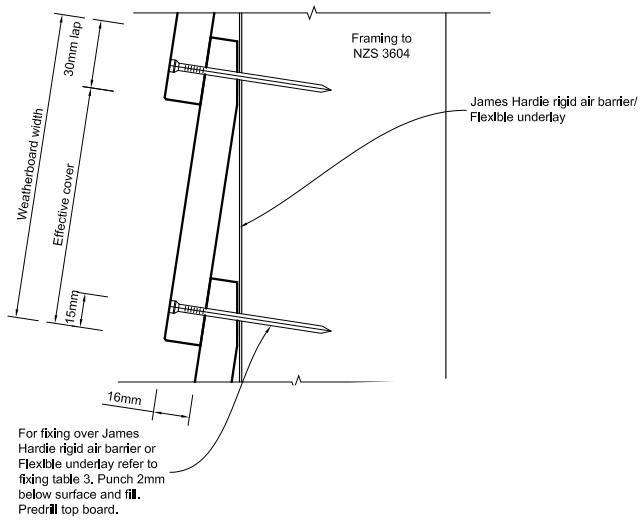

Exposed Nailing

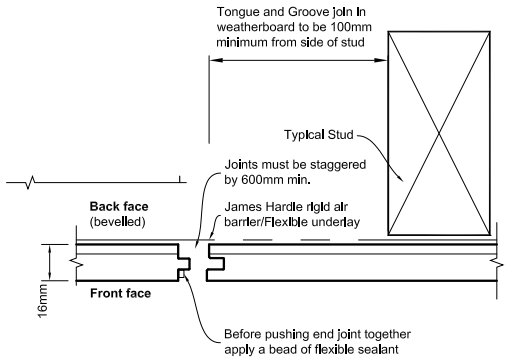

Jointing Off Stud

Figure 3: Direct fix boxed corner - Option 1

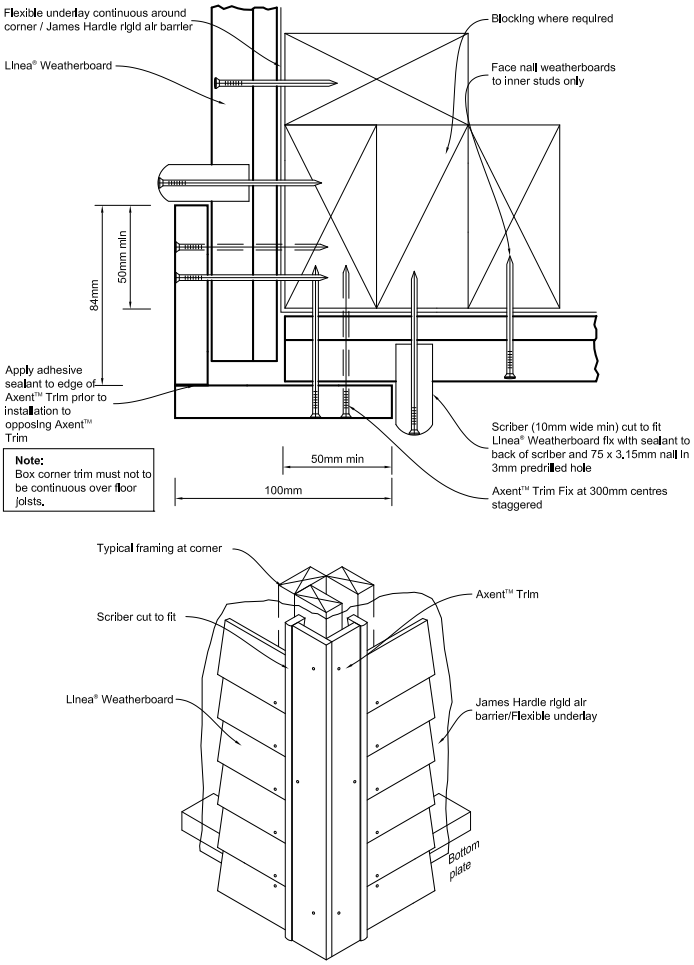

Figure 4: Direct fix boxed corner - Option 2

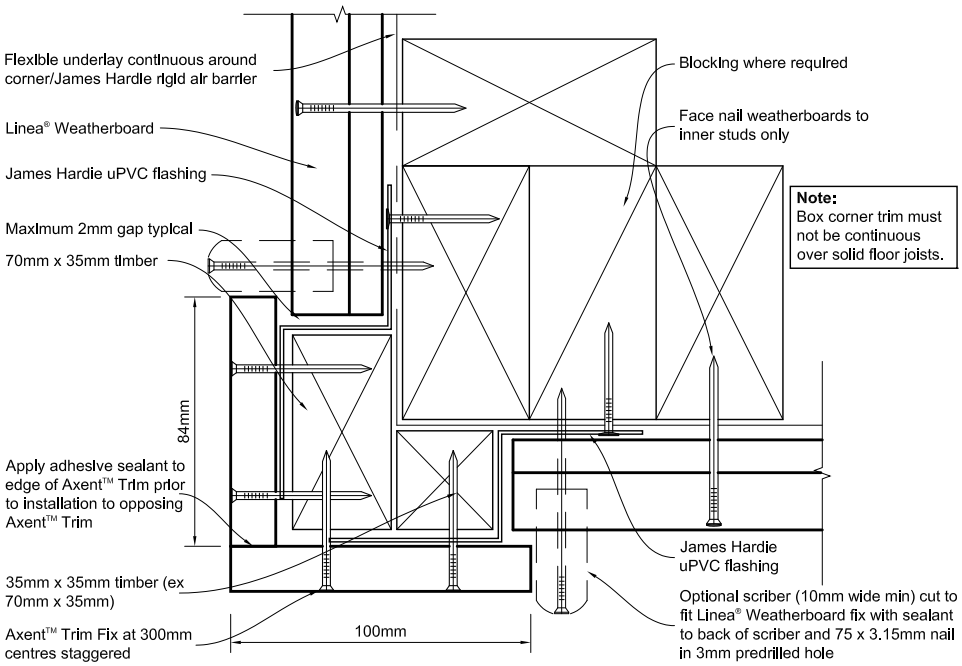

Figure 5: Direct fix mitre corner

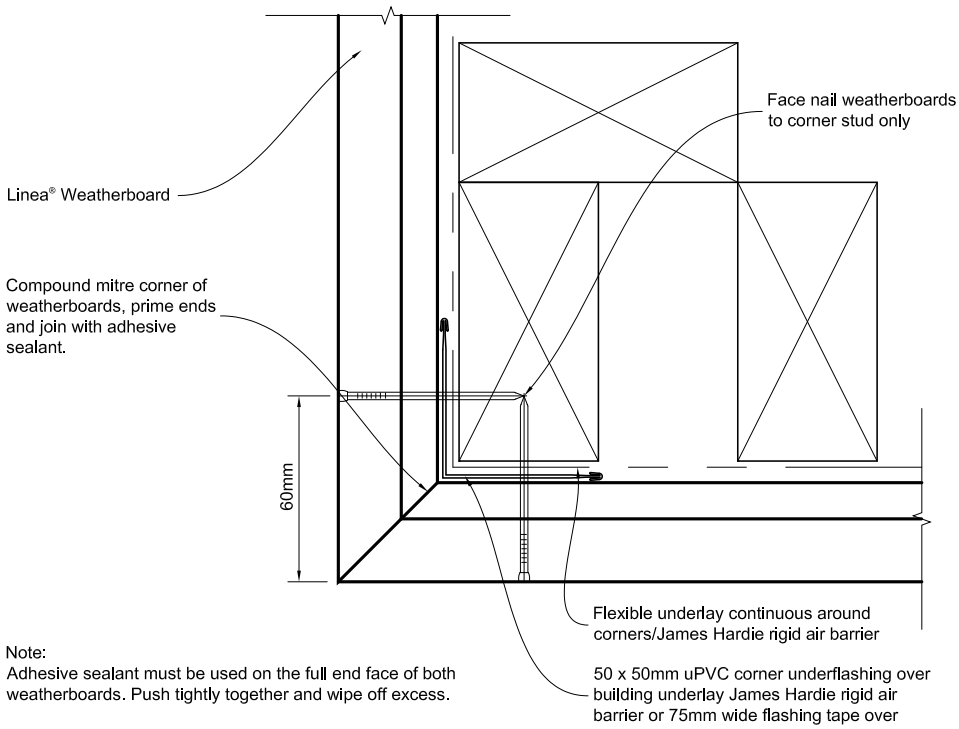

Note:
Adhesive sealant must be used on the full end face of both weatherboards. Push tightly together and wipe off excess.

Figure 6: Direct fix aluminium box corner

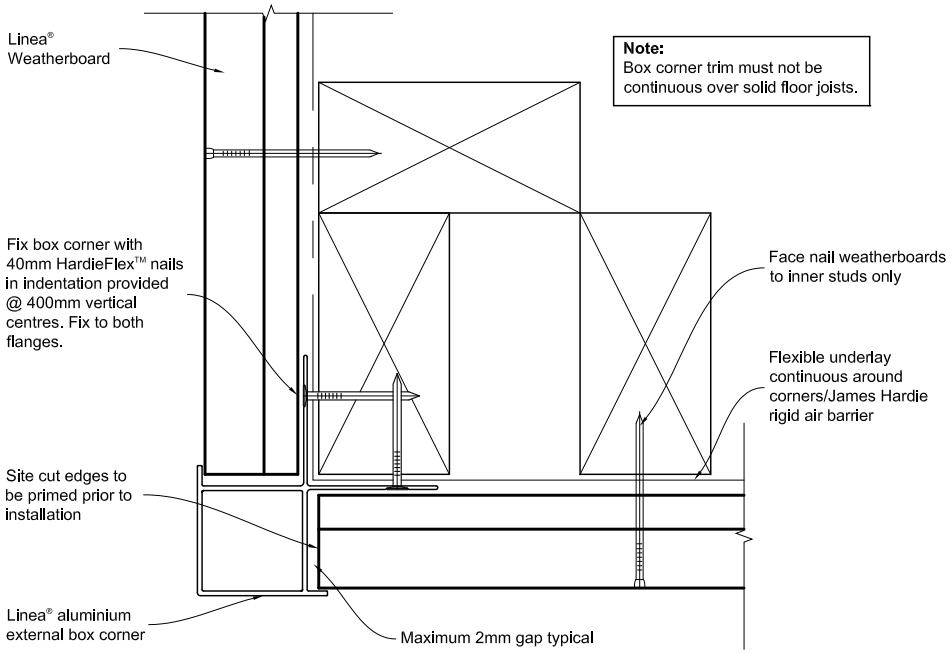

Figure 7: Direct fix external corner soaker

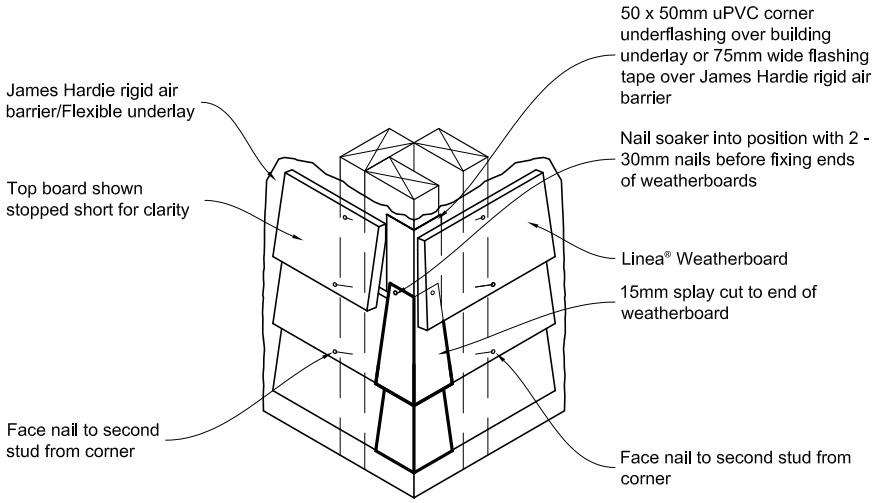

Soaker material	Nail material
Copper	Copper or phosphor bronze
Aluminium	Hot dip galvanised
Stainless steel	Stainless steel

Figure 8: Direct fix internal corner

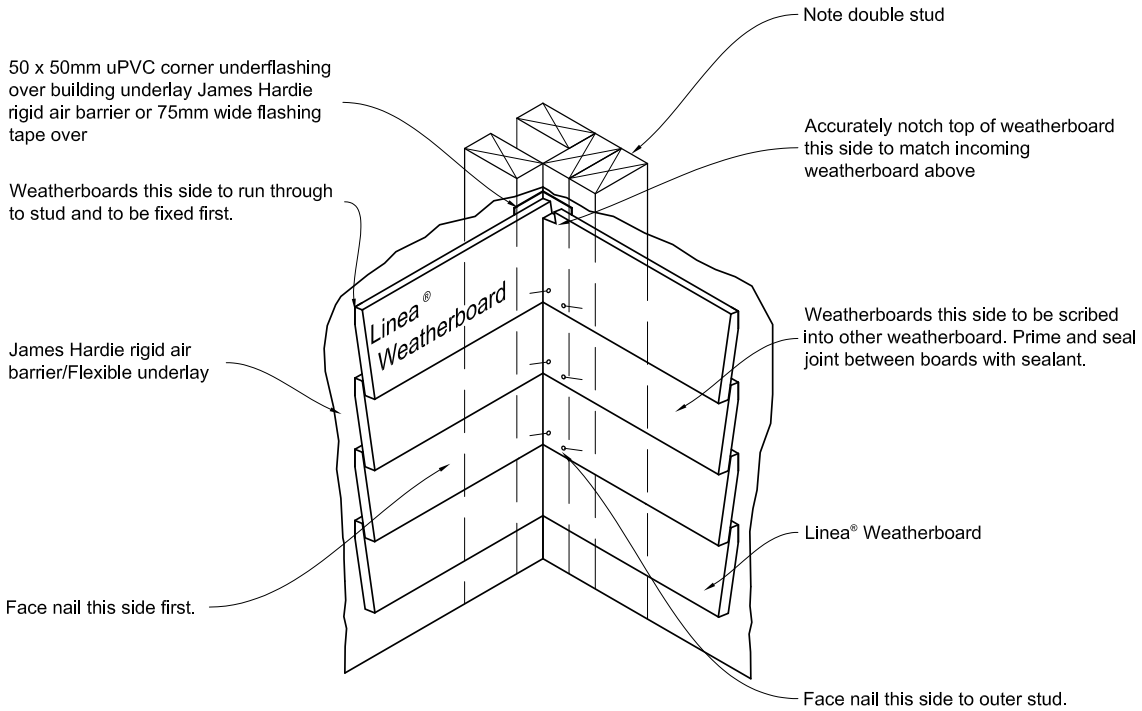

Figure 9: Direct fix internal 90º aluminium 'W' mould corner

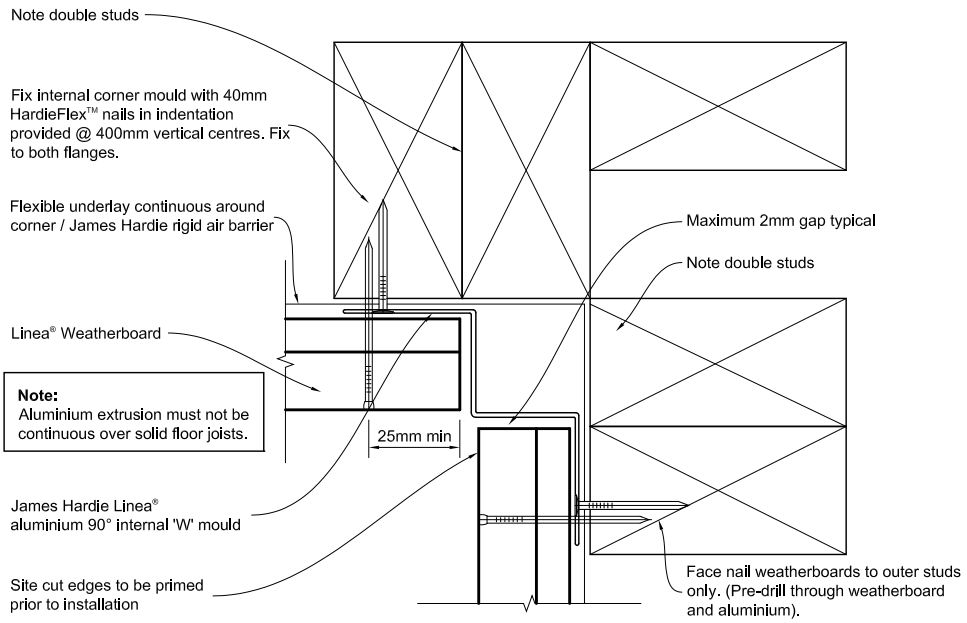

Figure 10: Direct fix internal 135º aluminium 'W' mould corner

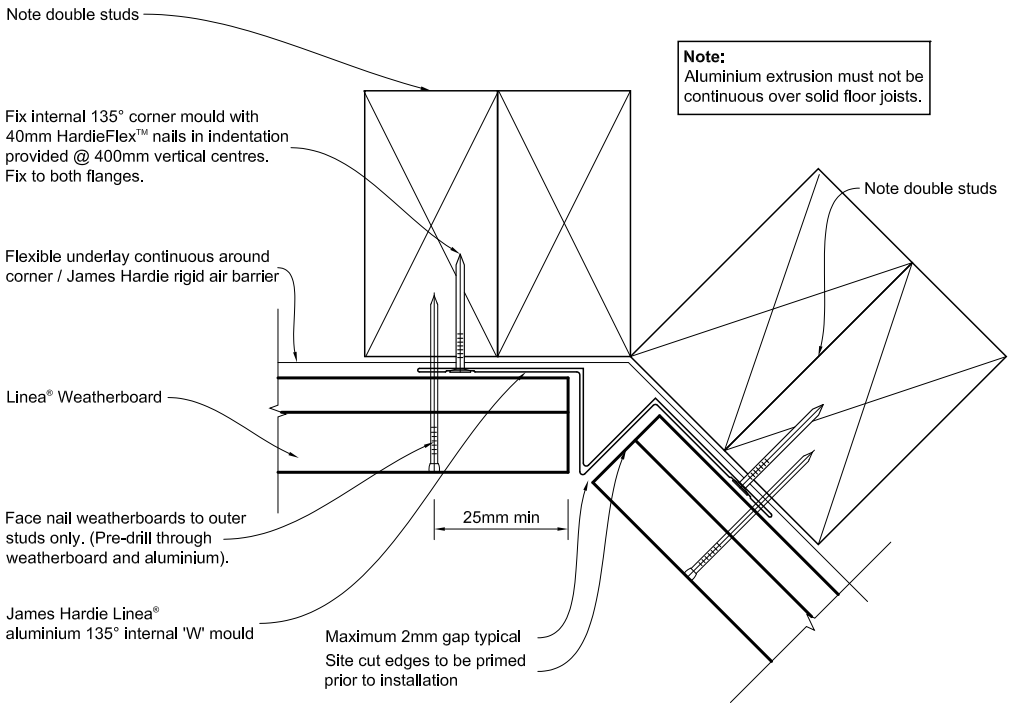

Figure 11: Direct fix window sill flashing sill tray and facings

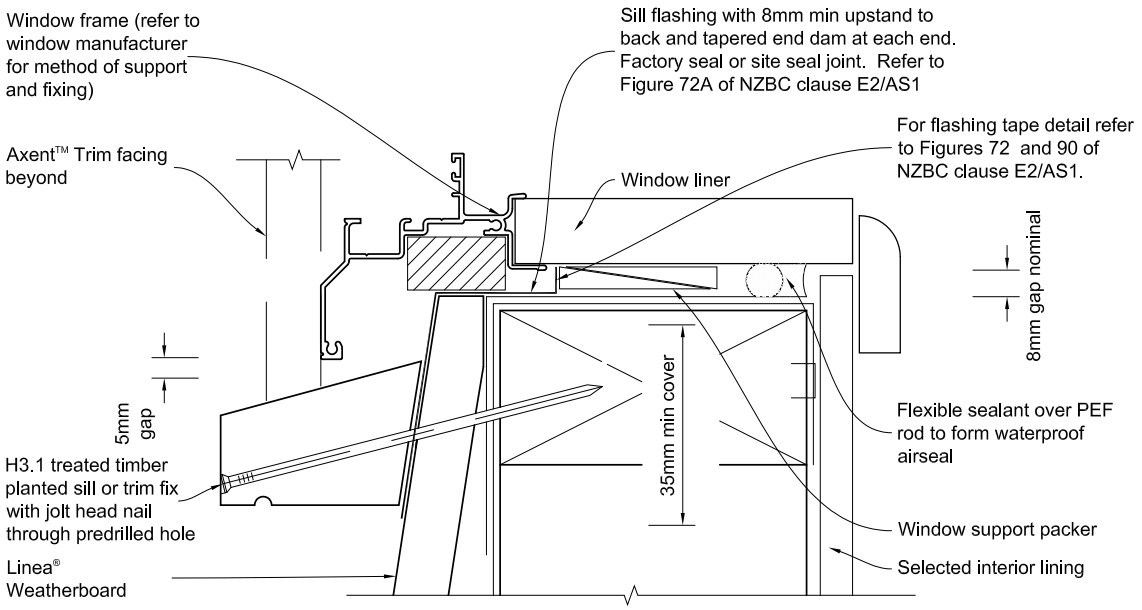

General notes for materials selection

1. Flashing materials must be selected based on environmental exposure, refer to NZS 3604 and Table 20 of NZBC clause E2/AS1.
2. Flexible underlay must comply with acceptable solution E2/AS1.
3. Flashing tape must have proven compatibility with the selected flexible underlay/James Hardie rigid air barrier and other materials with which it comes into contact .

Refer to the manufacturer or supplier for technical information for these materials.

Figure 12: Direct fix window head and door with facings

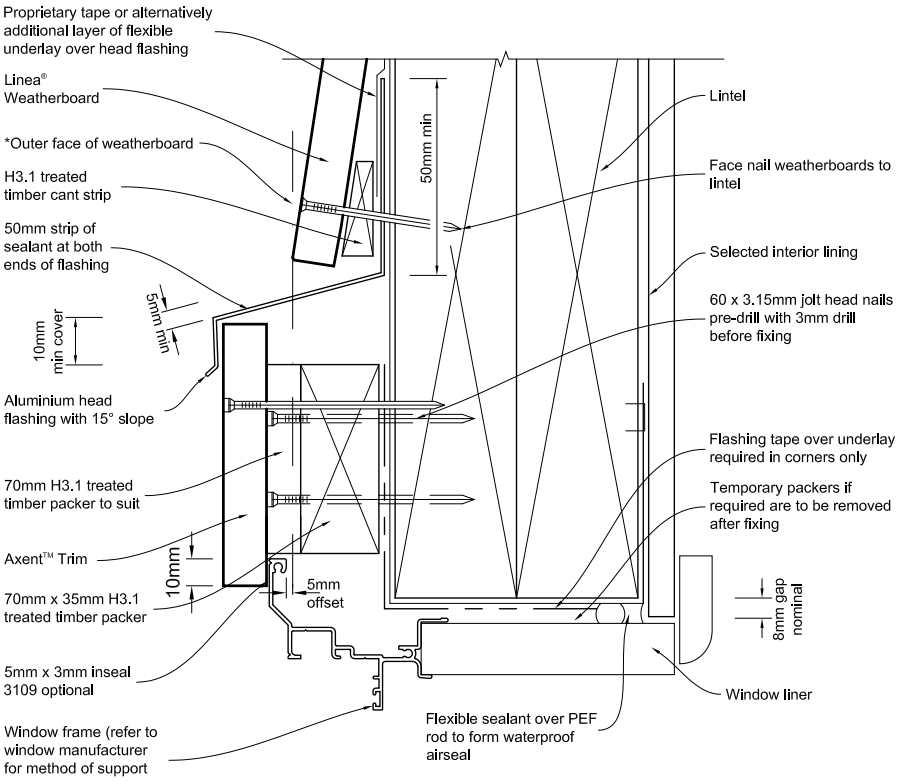

Note:
When James Hardie rigid air barrier is used flashing tape to be applied to the entire window opening. Sealant must be installed between head flashing and trim in VH wind zones. Refer to Figure 71 of E2/AS1

Figure 13: Direct fix window and door jamb with facings

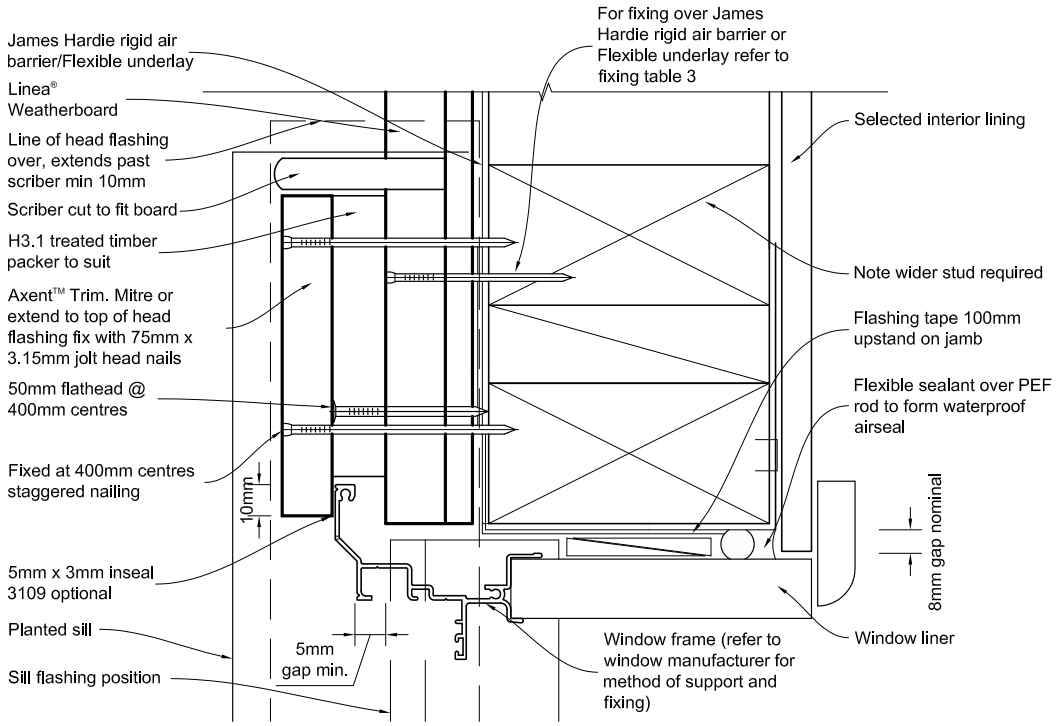

Note:
When James Hardie rigid air barrier is used flashing tape to be applied to the entire window opening.

Figure 14: Direct fix window and door sill without facings

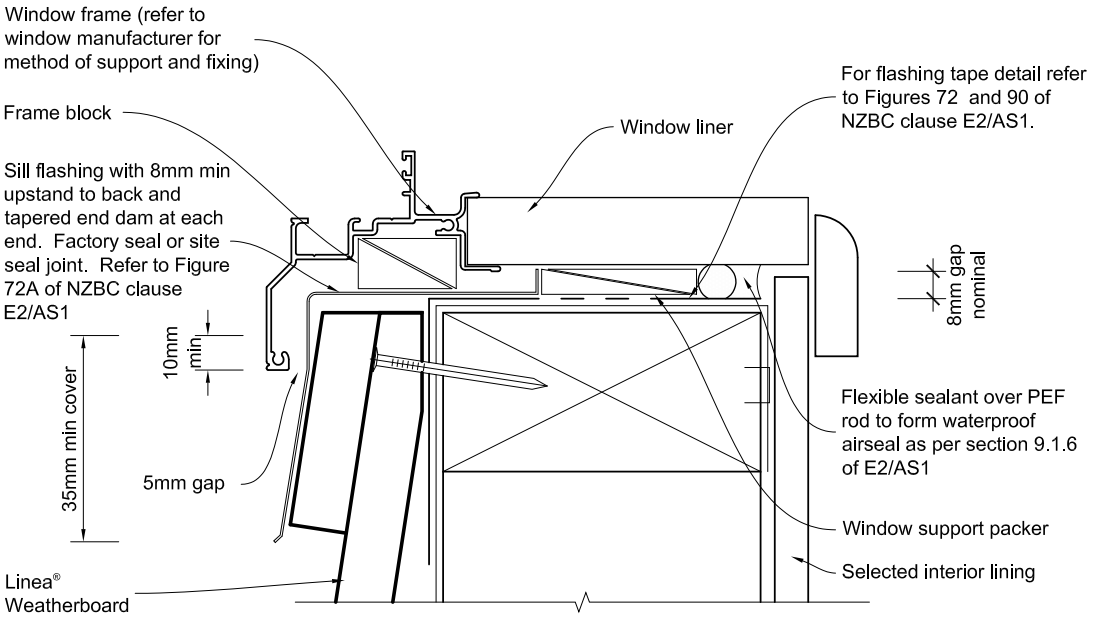

General notes for materials selection

1. Flashing materials must be selected based on environmental exposure, refer to NZS 3604 and Table 20 of NZBC clause E2/AS1.
2. Flexible underlay must comply with acceptable solution E2/AS1.
3. Flashing tape must have proven compatibility with the selected flexible underlay/James Hardie rigid air barrier and other materials with which it comes into contact.

Refer to the manufacturer or supplier for technical information for these materials.

Figure 15: Direct fix window and door head without facings

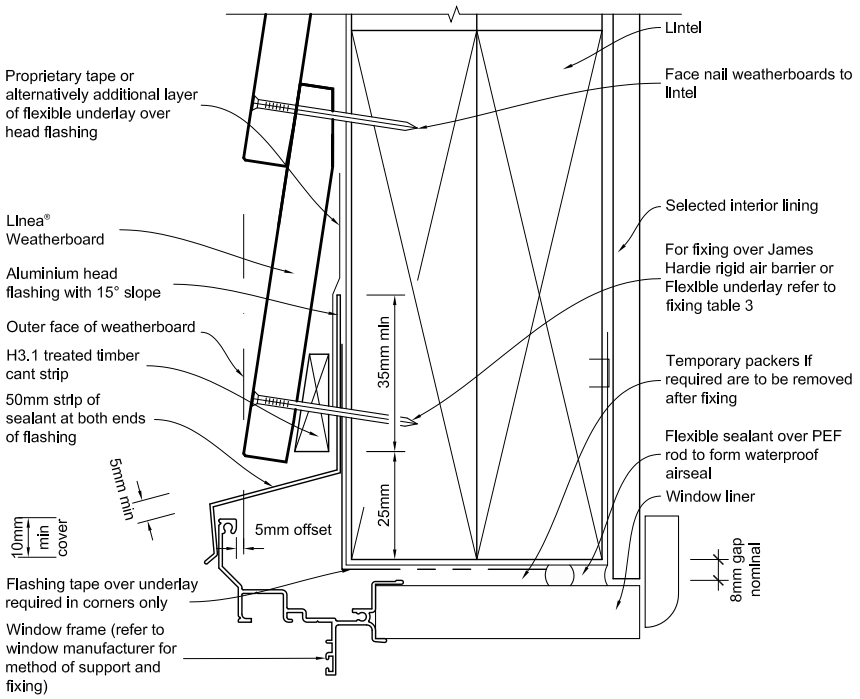

Note:
When James Hardie rigid air barrier is used flashing tape to be applied to the entire window opening.
Sealant must be installed between head flashing and window flange in VH wind zones. Refer Figure 71 of E2/AS1

Figure 16: Direct fix window and door jamb without facings

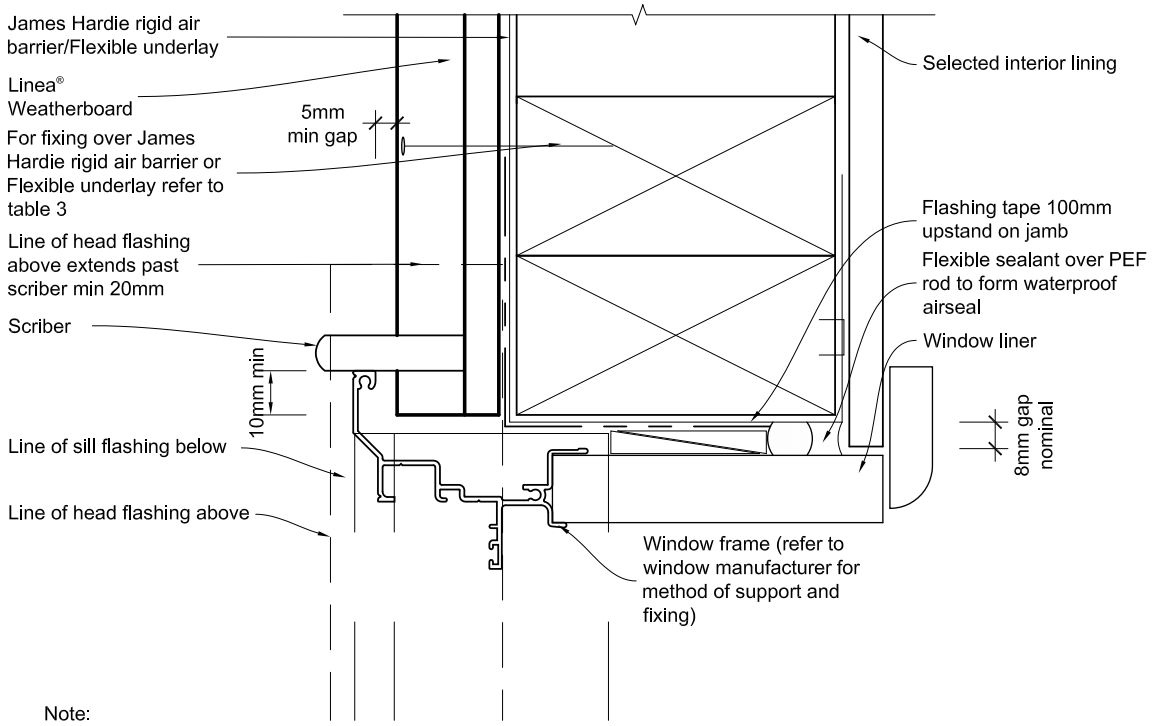

Note:
When James Hardie rigid air barrier is used flashing tape to be applied to the entire window opening.
Alternatively window jamb can be formed as per E2/AS1 with jamb battens.

Figure 17: Direct fix head flashing termination

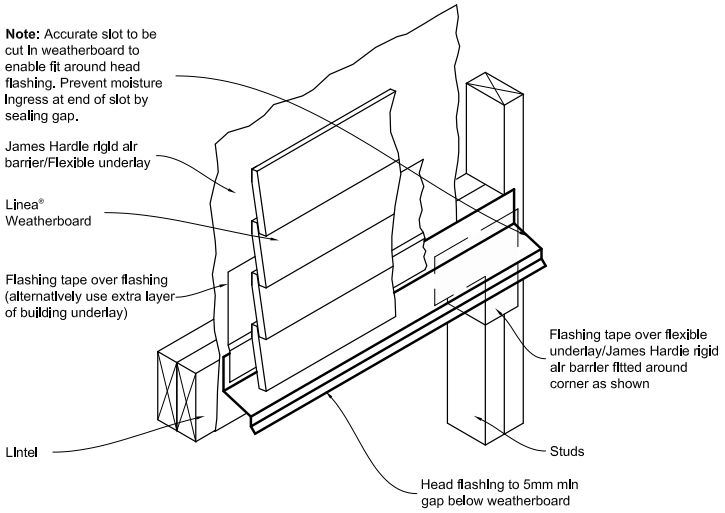

Note:
When James Hardie rigid air barrier is used flashing tape to be applied to the entire window opening.

Figure 18: Direct fix one piece apron flashing joint

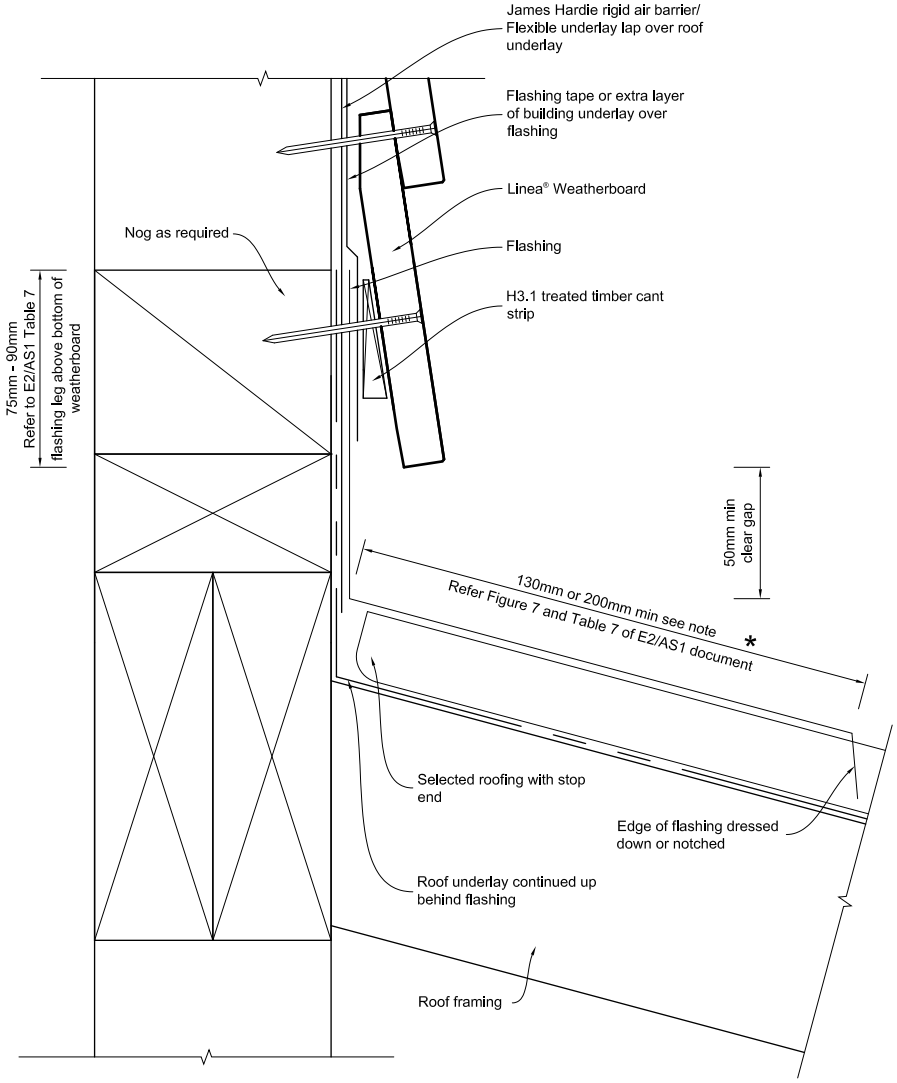

* When 50 year durability for flashing is required refer Table 20 of E2/AS1 of NZBC.

Vertical Section

Figure 19: Direct fix pipe penetration

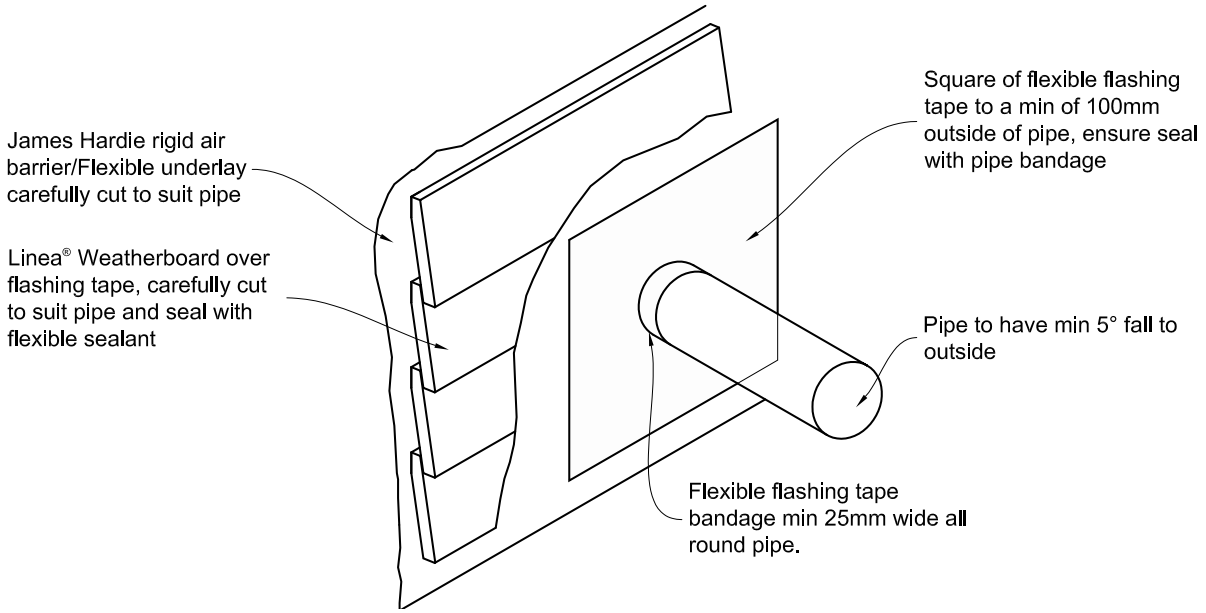

Figure 20: Direct fix meter box at head

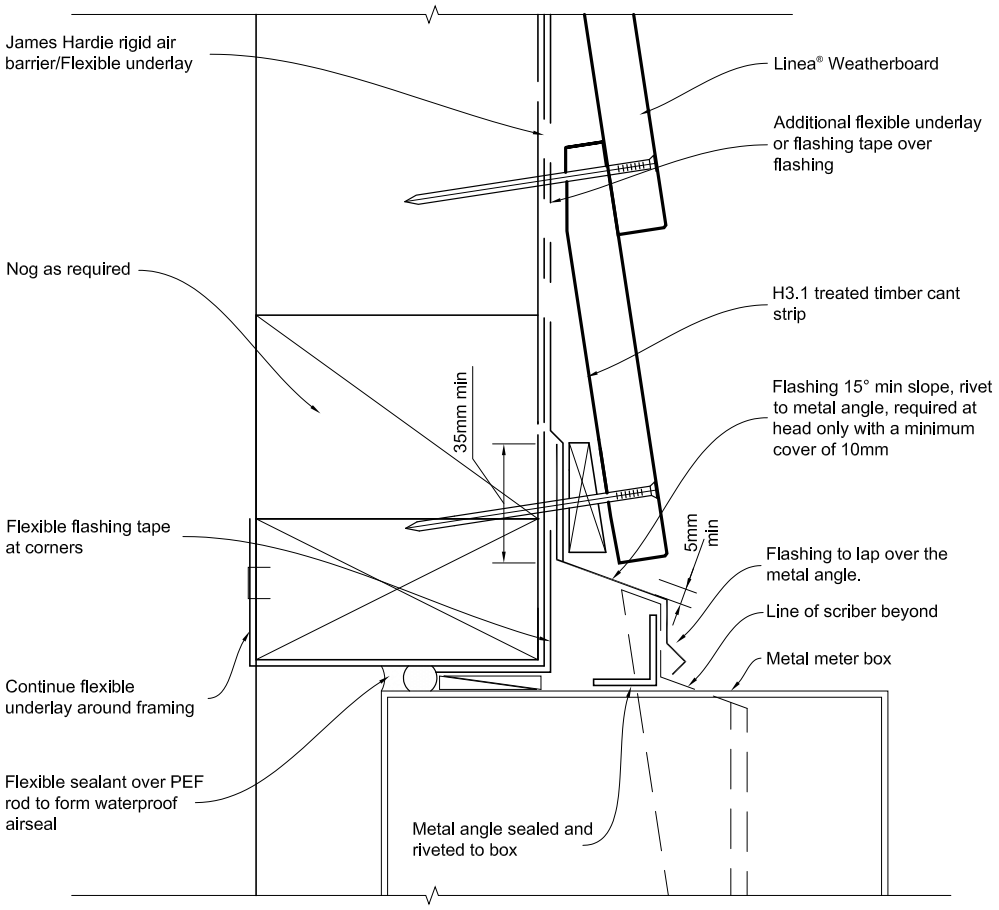

Note:
When James Hardie rigid air barrier is used flashing tape to be applied to the entire opening.

Figure 21: Direct fix meter box at sill

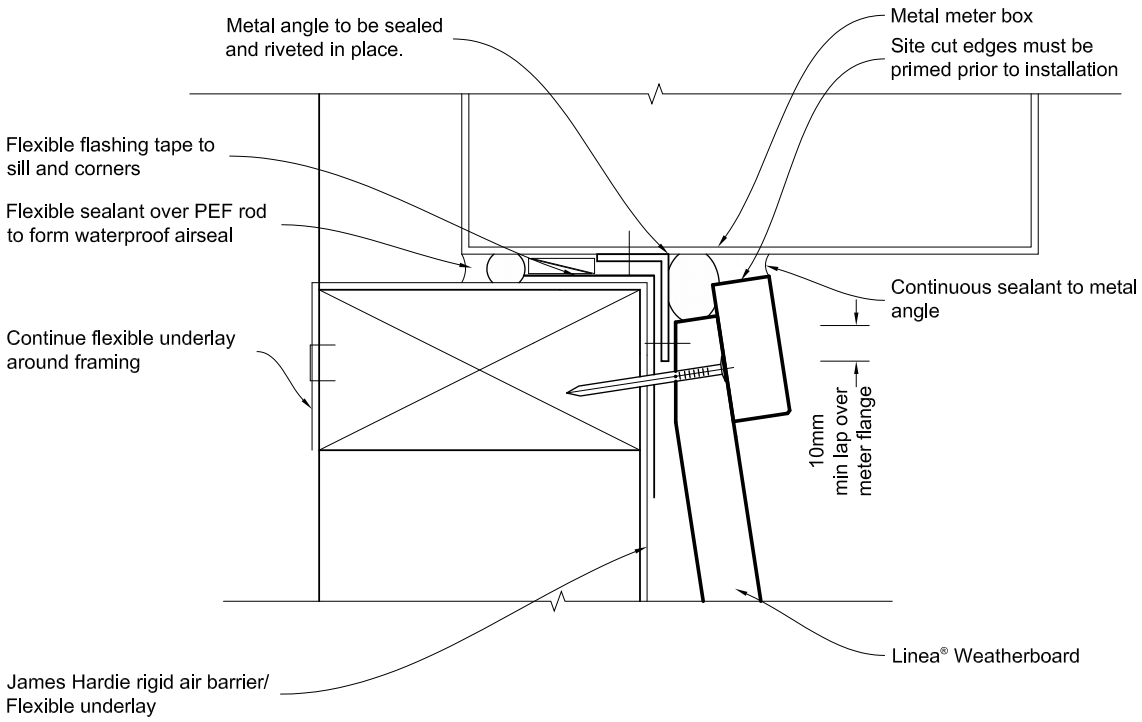

Note:
When James Hardie rigid air barrieris used flashing tape to be applied to the entire opening.

Figure 22: Direct fix meter box at jamb

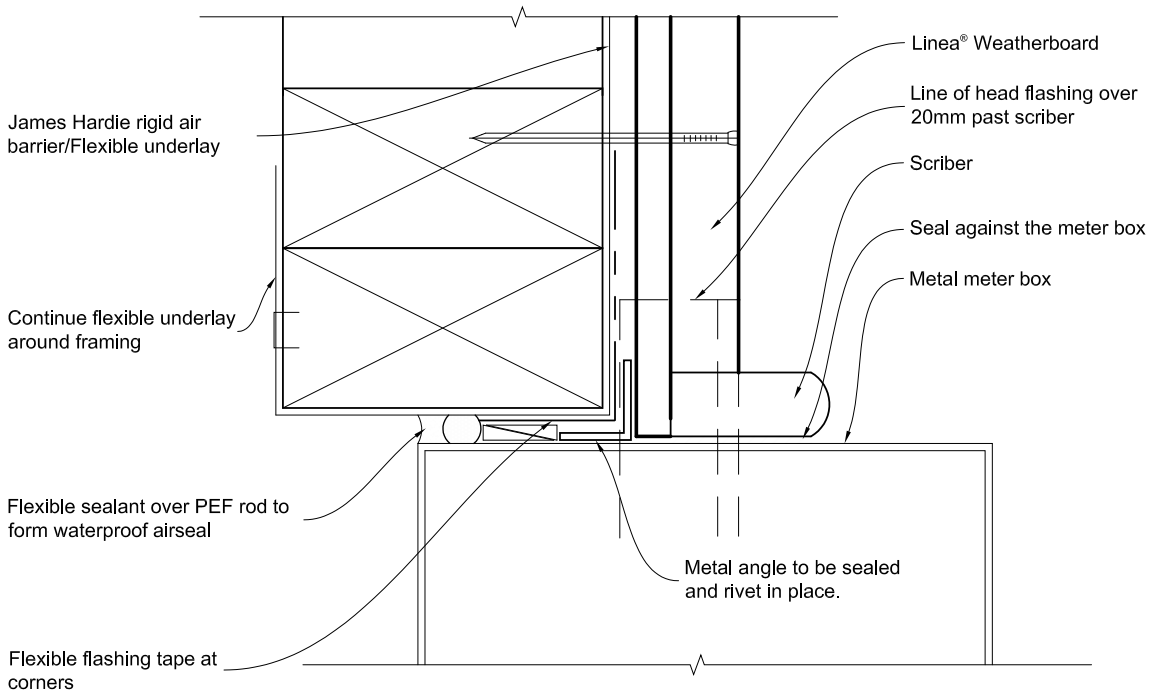

Note:
When James Hardie rigid air barrier is used flashing tape to be applied to the entire opening.

Figure 23: Direct fix deck junction

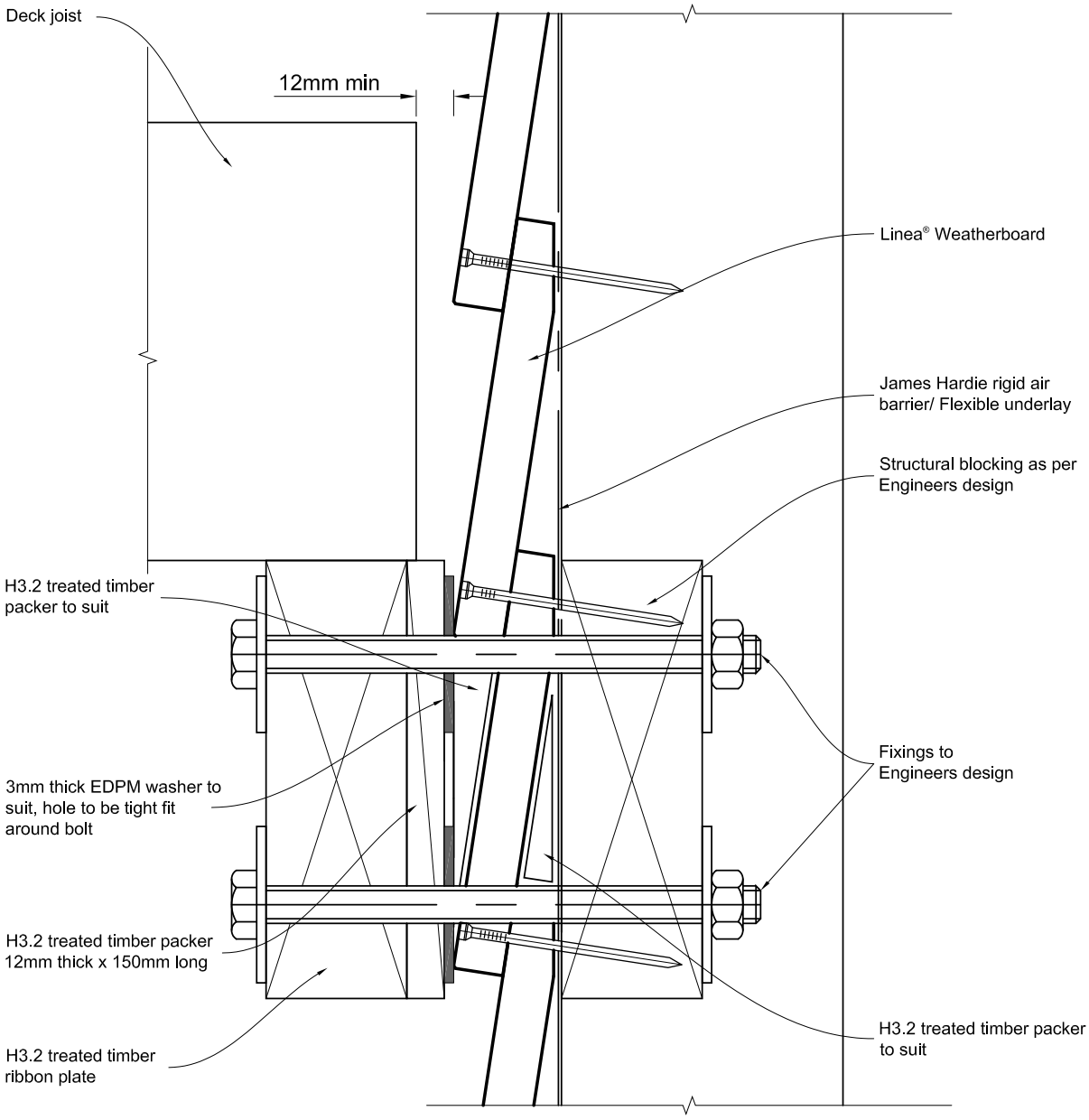

Figure 24: Direct fix cantilever deck junction

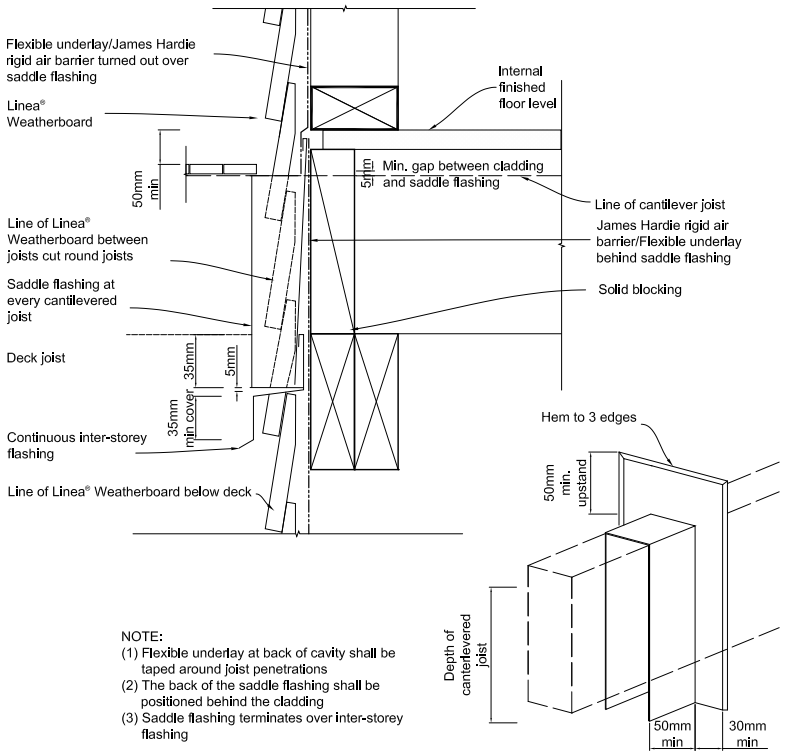

NOTE:
(1) Flexible underlay at back of cavity shall be taped around joist penetrations
(2) The back of the saddle flashing shall be positioned behind the cladding
(3) Saddle flashing terminates over inter-storey flashing

Figure 25: Sloping soffit to weatherboard junction combined figure

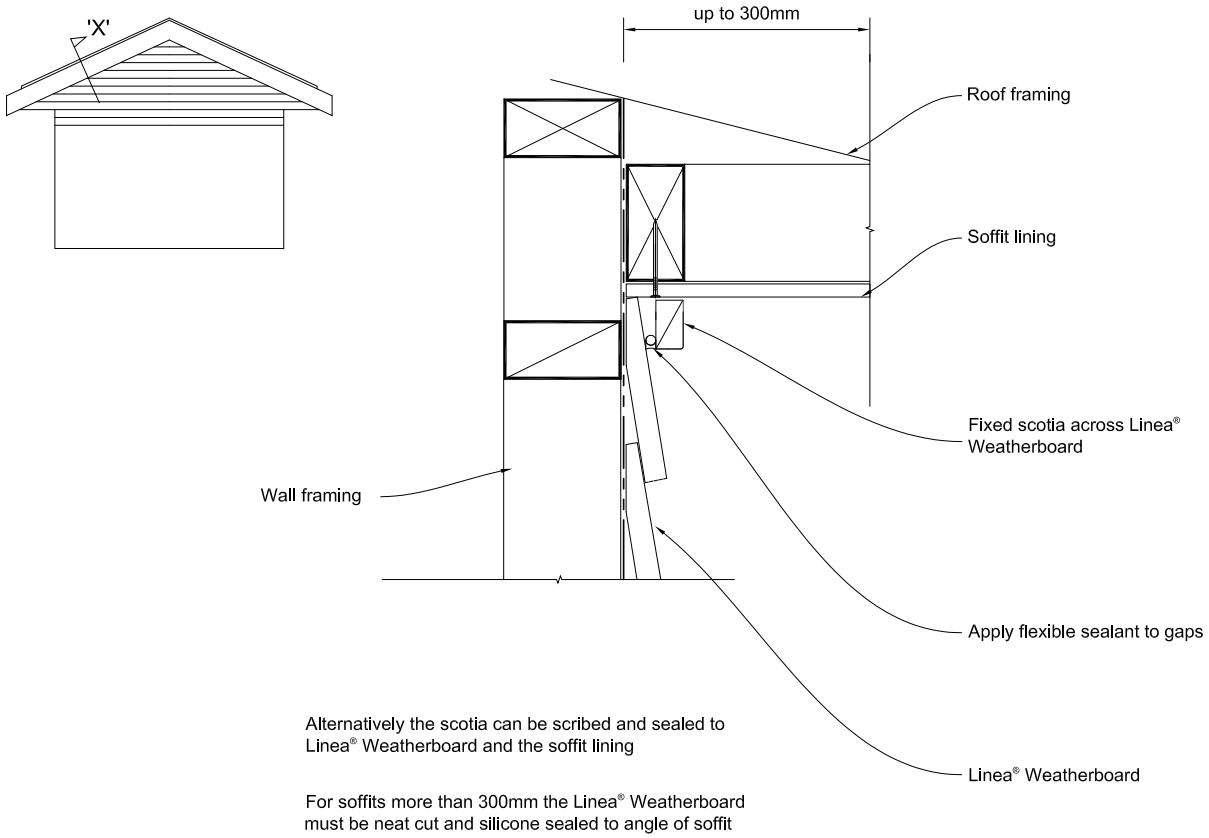

Alternatively the scotia can be scribed and sealed to Linea® Weatherboard and the soffit lining

For soffits more than 300mm the Linea® Weatherboard must be neat cut and silicone sealed to angle of soffit

Figure 26: Enclosed deck

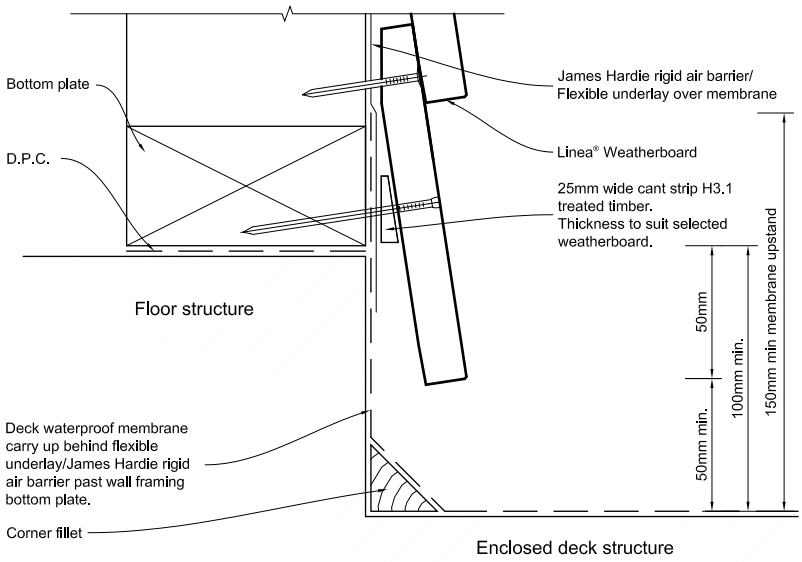

Figure 27: Timber cavity batten fixing

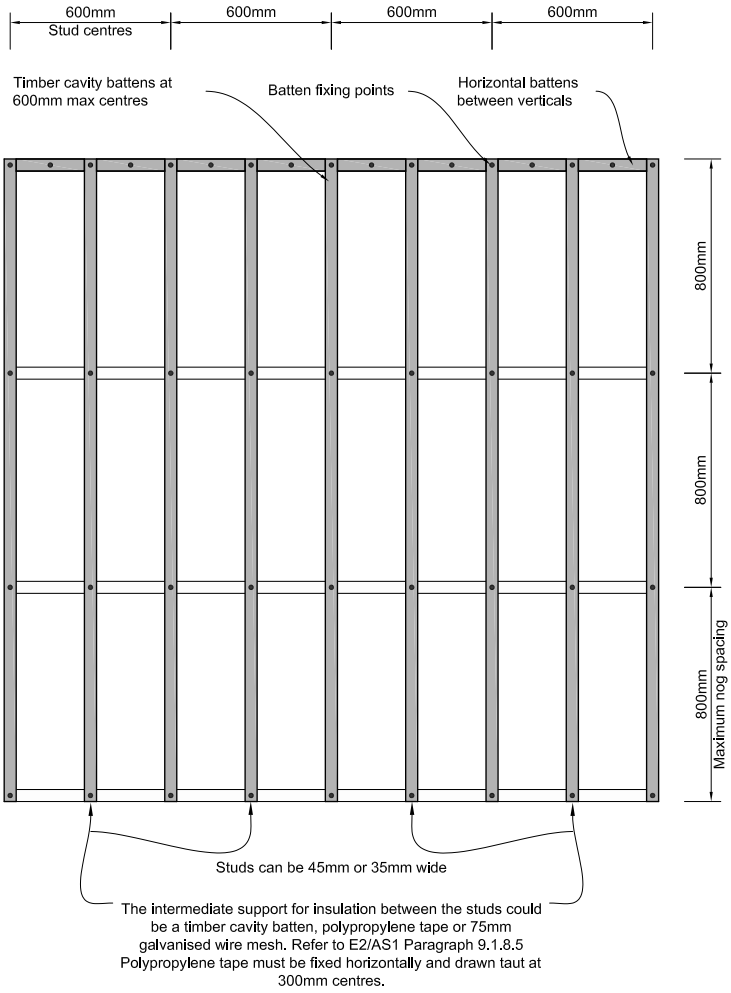

Figure 28: Timber cavity foundation detail

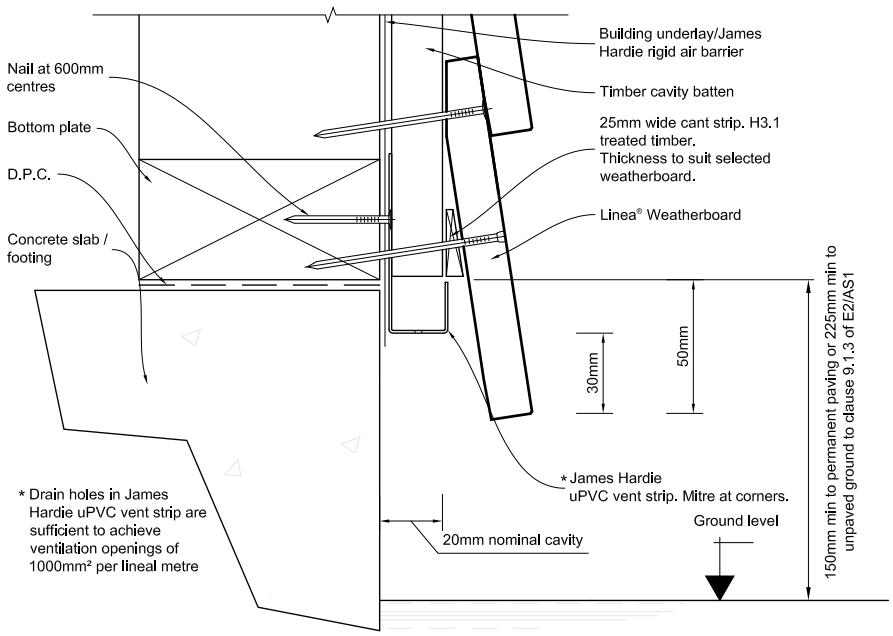

Figure 29: Timber cavity soffit detail

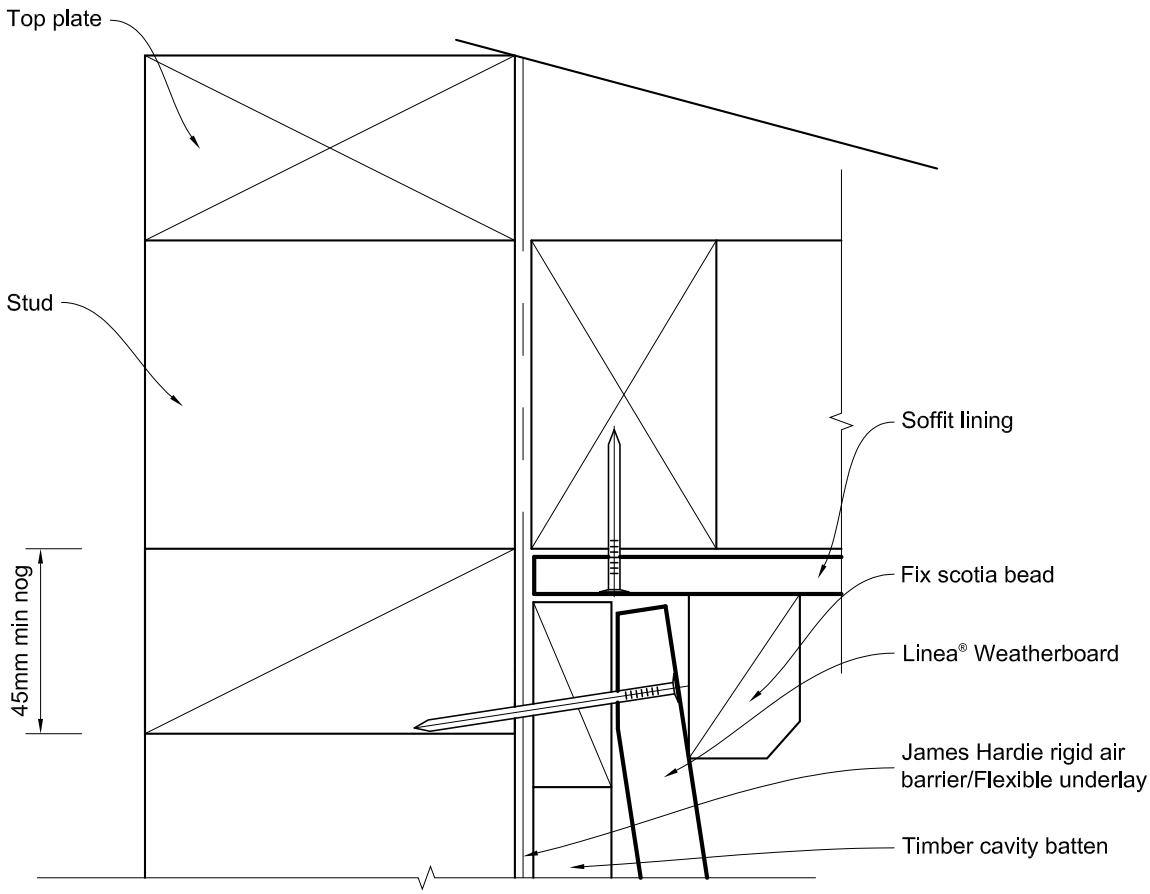

Figure 30: Timber cavity weatherboard fixing

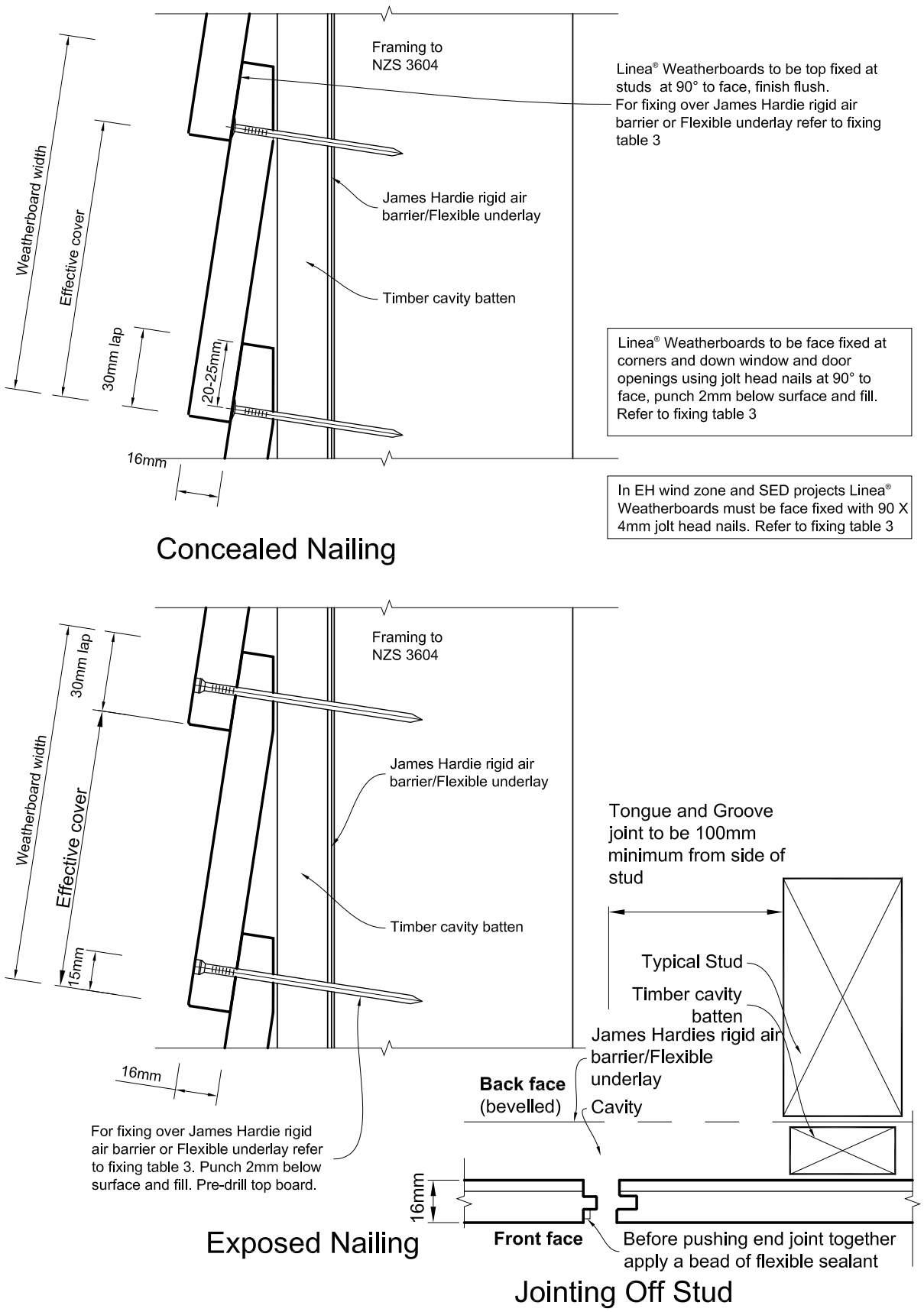

Figure 31: Timber cavity boxed corner

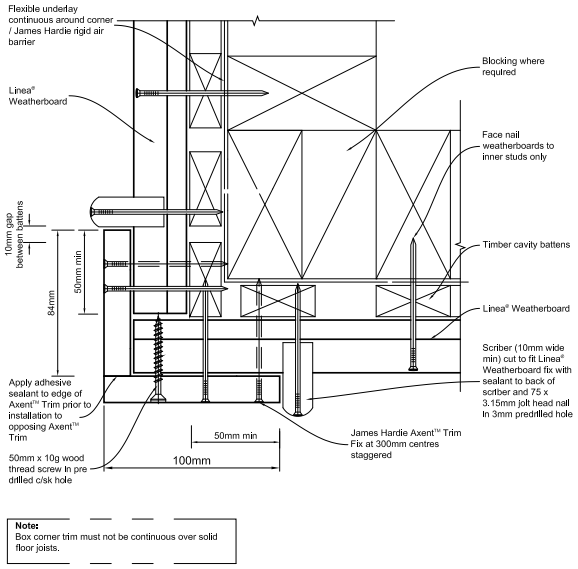

Figure 32: Timber cavity mitre corner

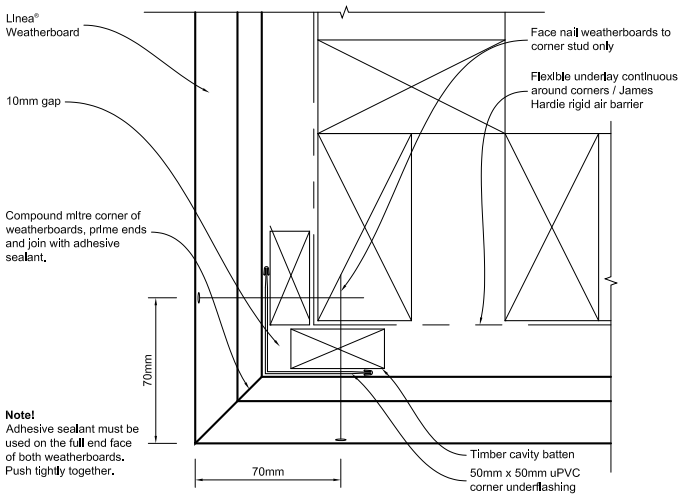

Figure 33: Timber cavity aluminium box corner

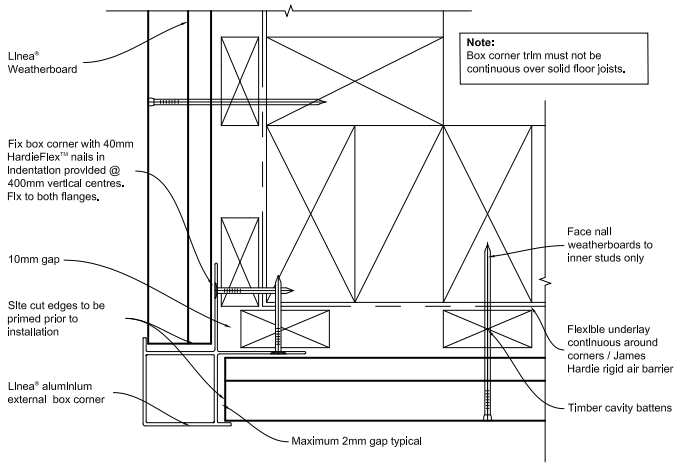

Figure 34: Timber cavity external corner soaker

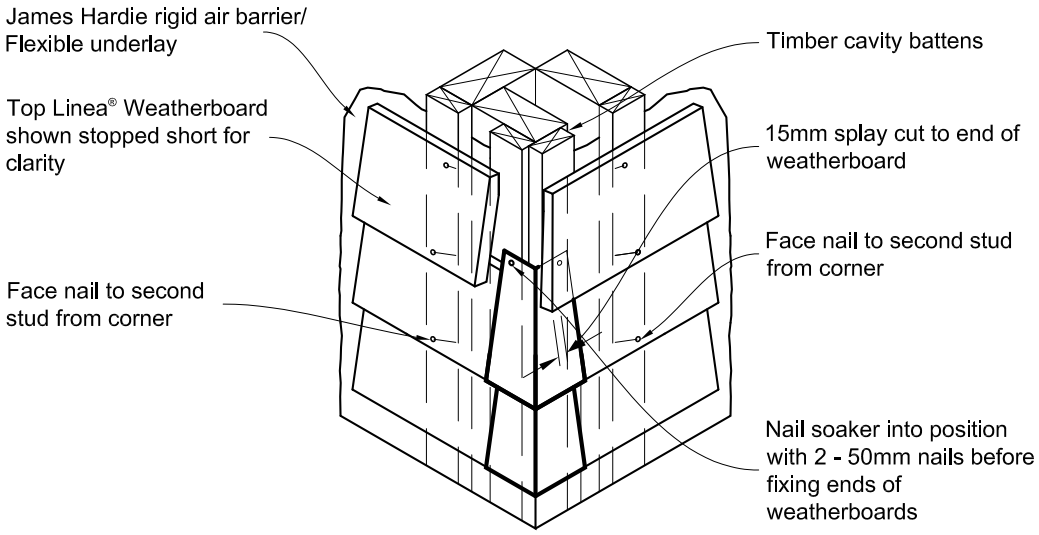

Soaker material	Nail material
Copper	Copper or phosphor bronze
Aluminium	Hot dip galvanised
Stainless steel	Stainless steel

Figure 35: Timber cavity internal corner

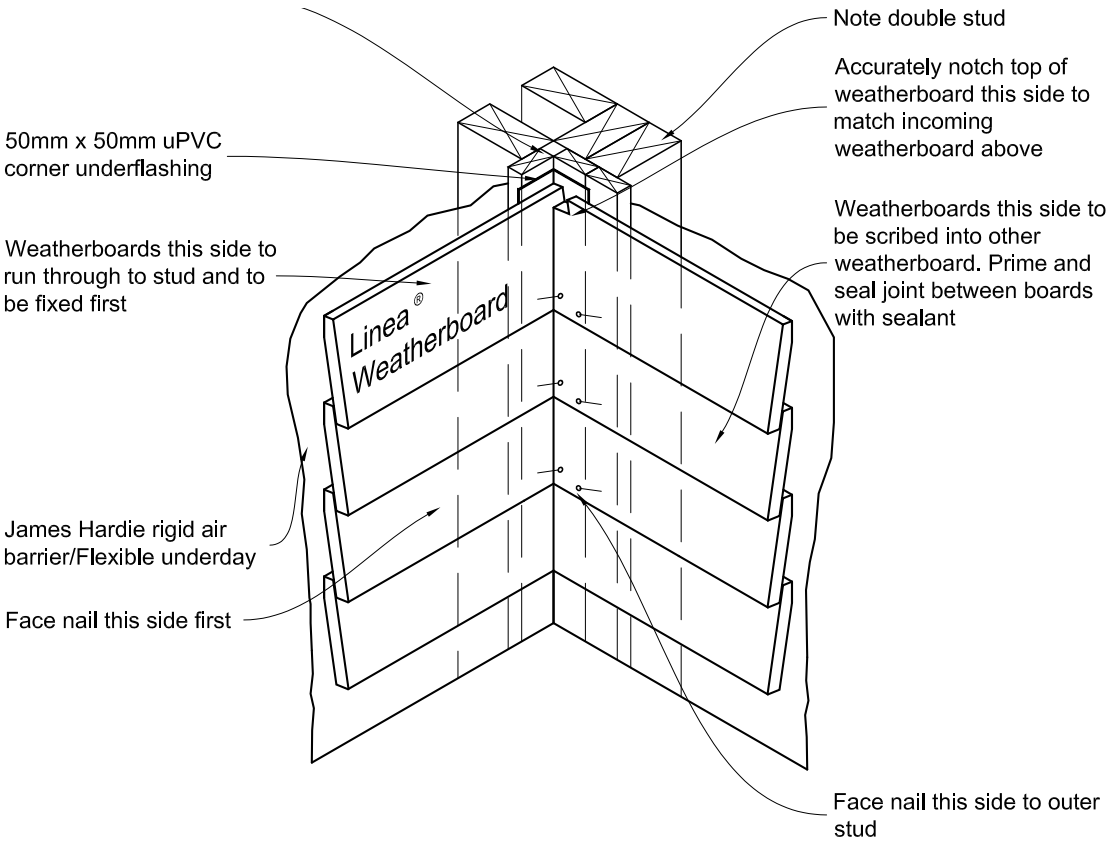

Figure 36: Timber cavity internal 90º aluminium 'W' mould corner

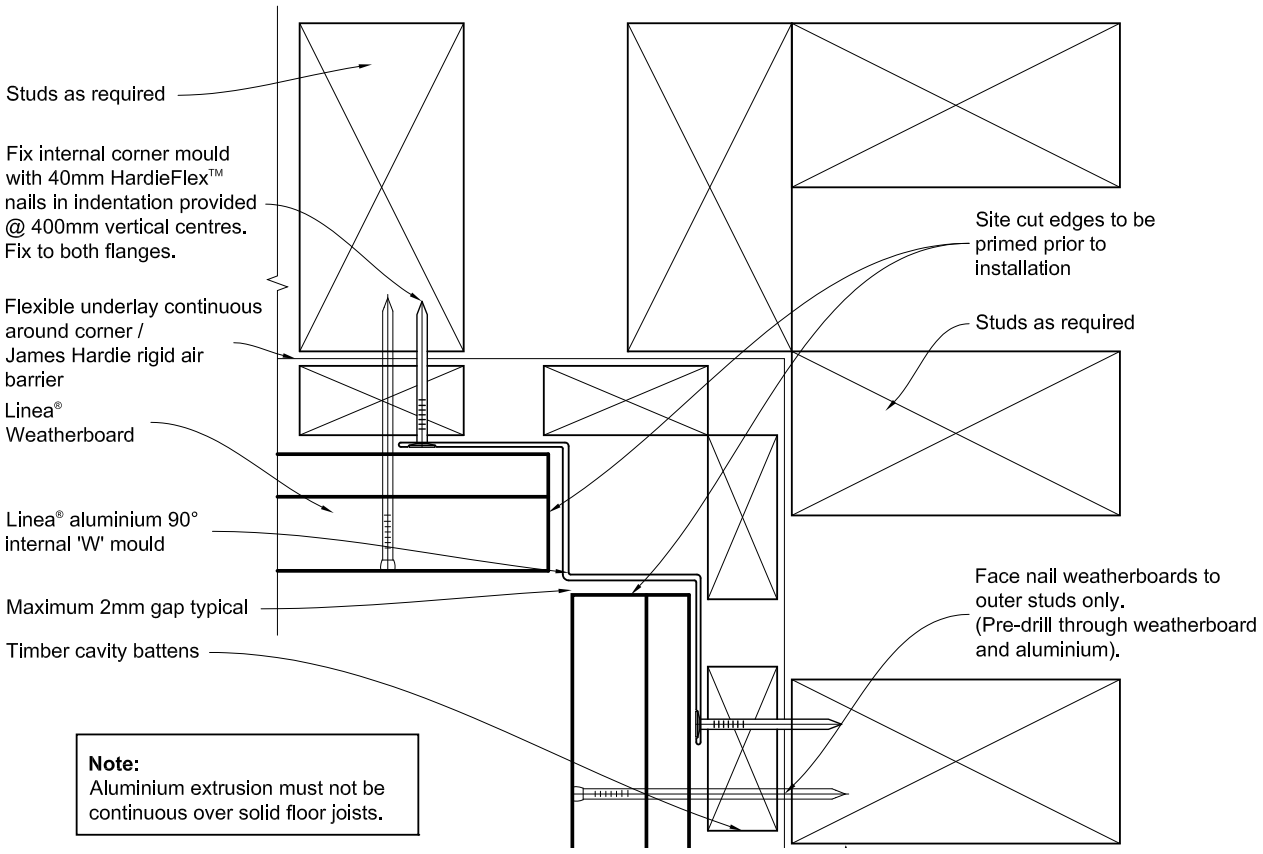

Figure 37: Timber cavity internal 135º aluminium 'W' mould corner

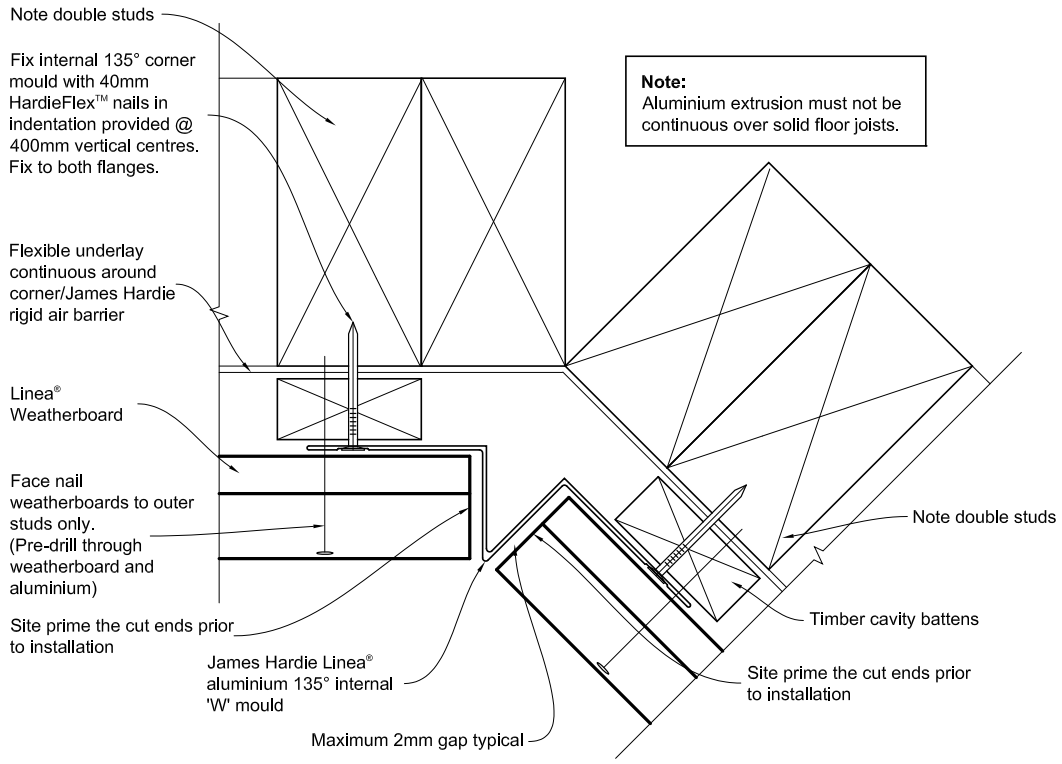

Figure 38: Timber cavity batten layout at window opening

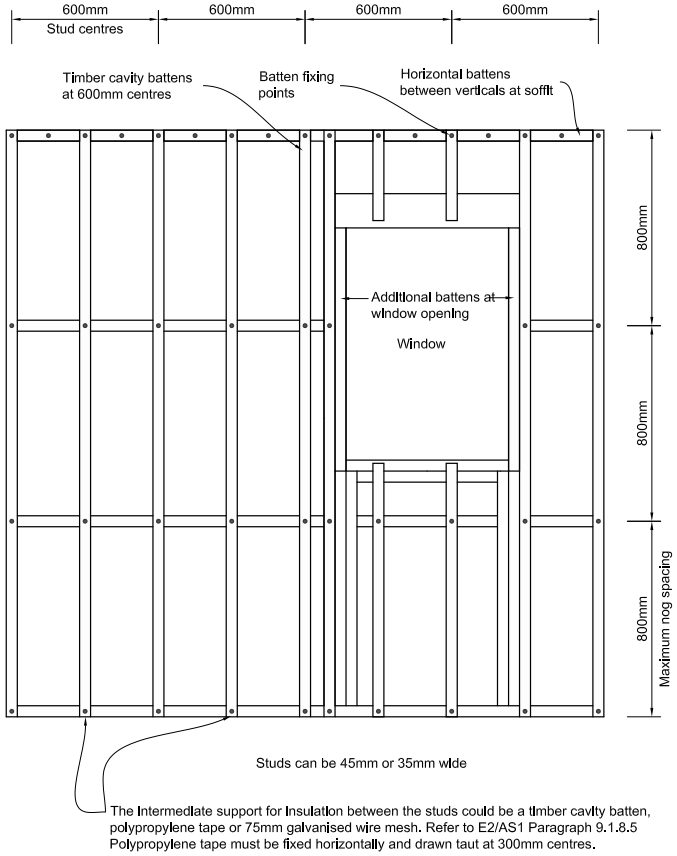

Figure 39: Timber cavity window sill with facings

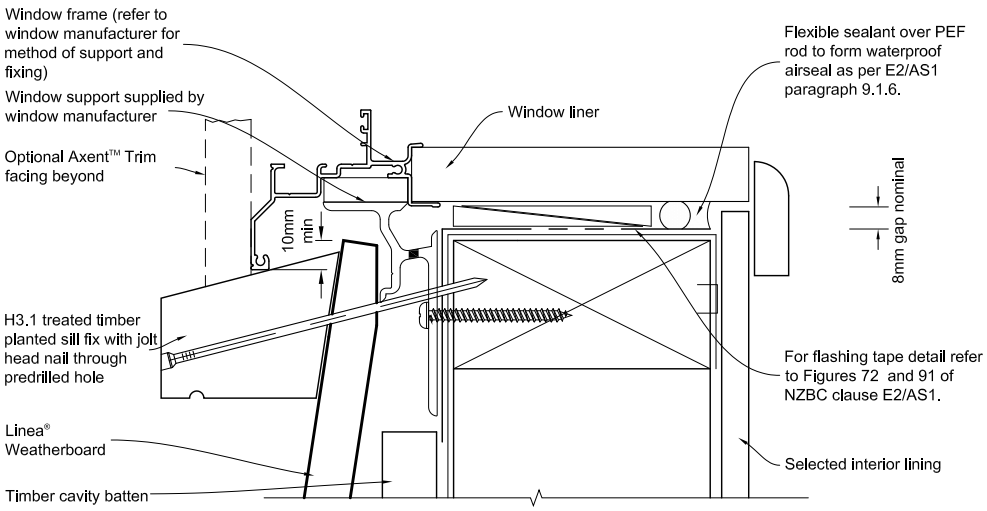

General notes for materials section

1. Flashing materials must be selected based on environmental exposure, refer to NZS 3604 and Table 20 of NZBC clause E2/AS1.
2. Flexible underlay must comply with acceptable solution E2/AS1.
3. Flashing tape must have proven compatibility with the selected flexible underlay / James Hardie rigid air barrier and other materials with which it comes into contact.

Refer to the manufacturer or supplier for technical information for these materials.

Figure 40: Timber cavity window and door head with facings

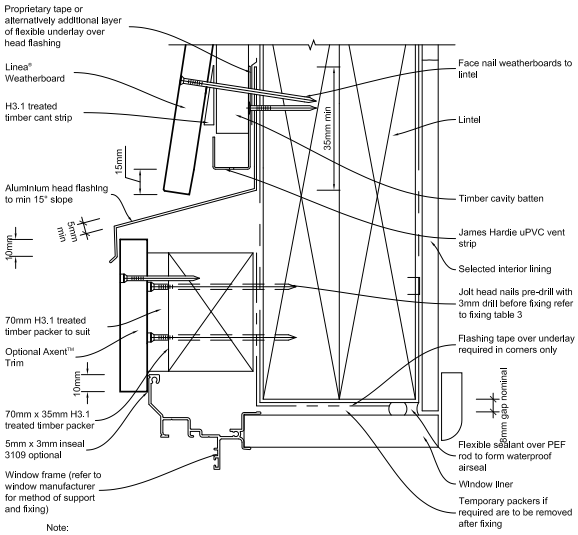

Note:
- When James Hardie rigid air barrier is used flashing tape to be applied to the entire window opening.
- Sealant must be installed between head flashing and trim in VH and EH wind zones and SED pressures.
- Alternatively, the head flashings can be formed with stop ends as per E2/AS1

Figure 41: Timber cavity window and door jamb with facings

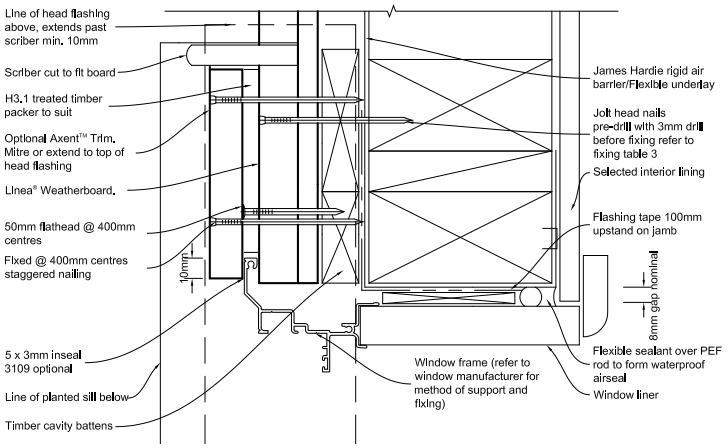

Note:
When James Hardie rigid air barrier is used flashing tape to be applied to the entire window opening.

Figure 42: Timber cavity window and door sill without facings

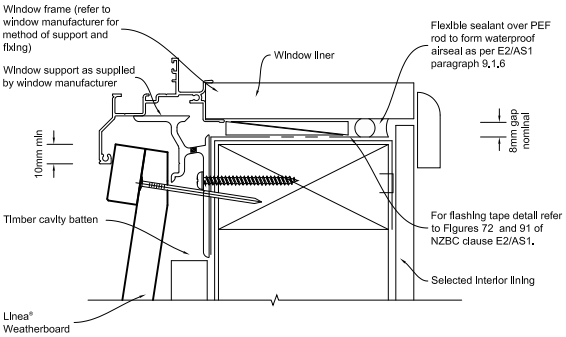

General notes for materials selection

1. Flashing materials must be selected based on environmental exposure, refer to NZS 3604 and Table 20 of NZBC clause E2/AS1.
2. Flexible underlay must comply with acceptable solution E2/AS1.
3. Flashing tape must have proven compatibility with the selected flexible underlay / James Hardies rigid air barrier and other materials with which it comes into contact.
4. Sill support bars must comply with EM6, E2/VM1 and B2/AS1

Refer to the manufacturer or supplier for technical information for these materials.

Figure 43: Timber cavity window and door head without facings

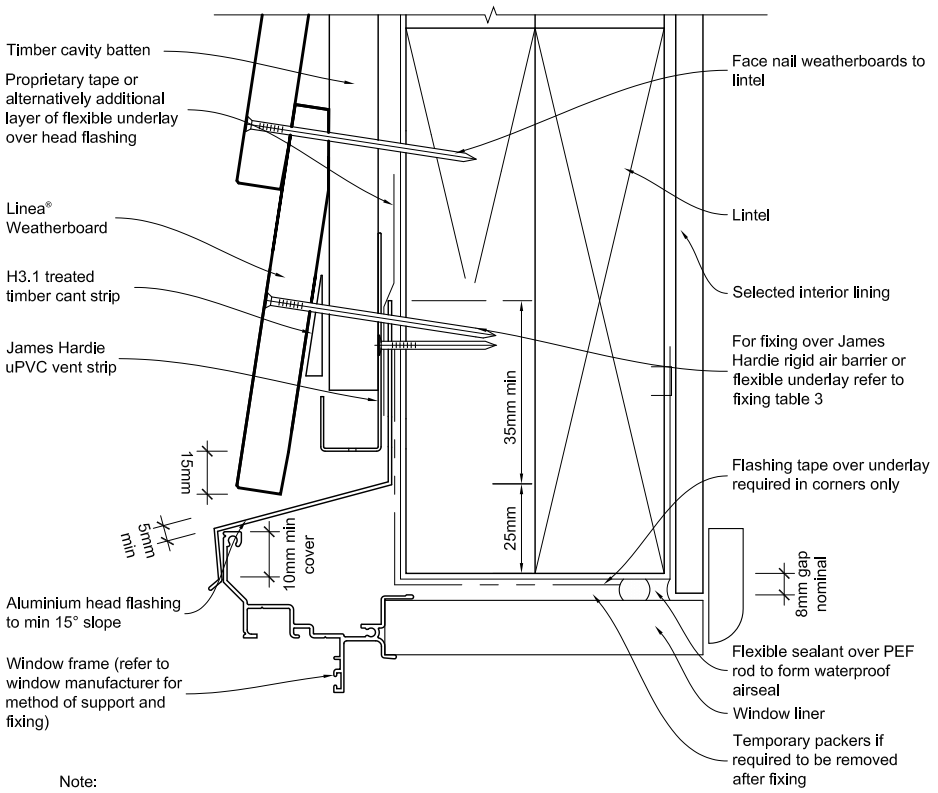

Note:

- When James Hardie rigid air barrier is used flashing tape to be applied to the entire window opening.
- Sealant must be installed between head flashing and flashing and trim in VH and EH wind zones and SED projects.
- Alternatively, the head flashings can be formed with stop ends as per E2/AS1

Figure 44: Timber cavity window and door jamb without facings

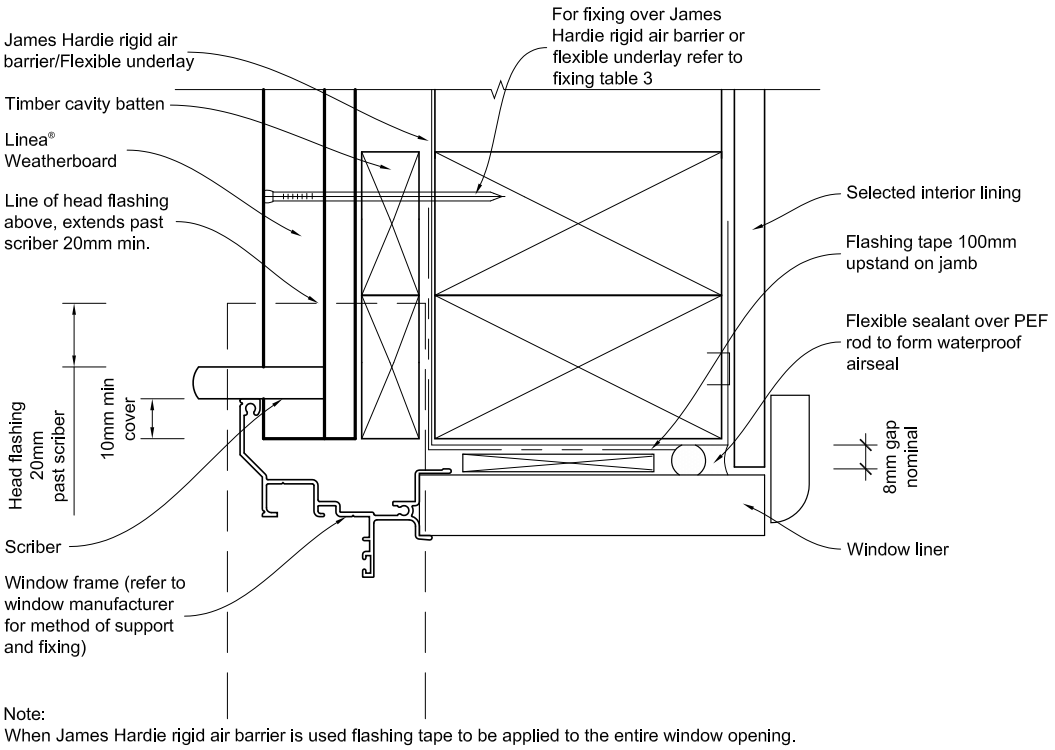

Note:
When James Hardie rigid air barrier is used flashing tape to be applied to the entire window opening.

Figure 45: Timber cavity head flashing termination

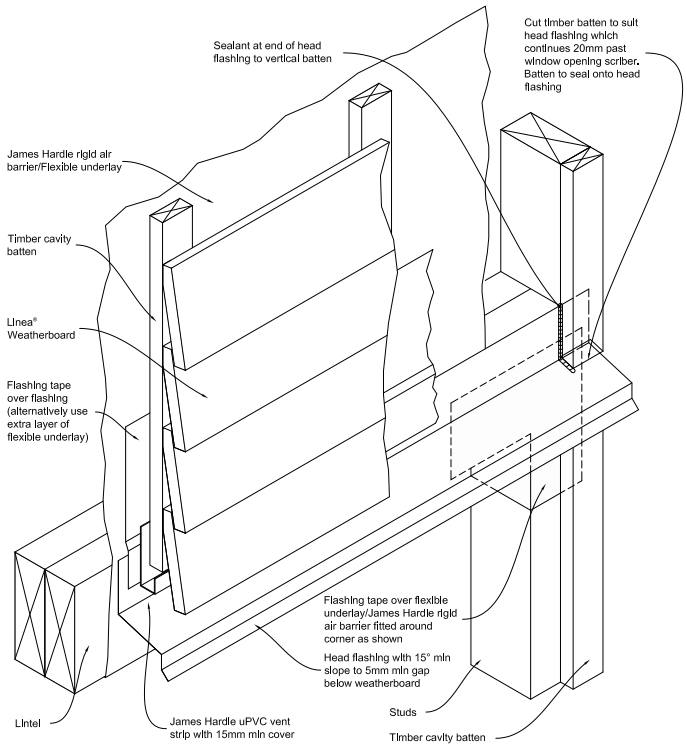

Note:
When James Hardie rigid air barrier is used flashing tape to be applied to the entire window opening.

Figure 46: Timber cavity one piece apron flashing joint

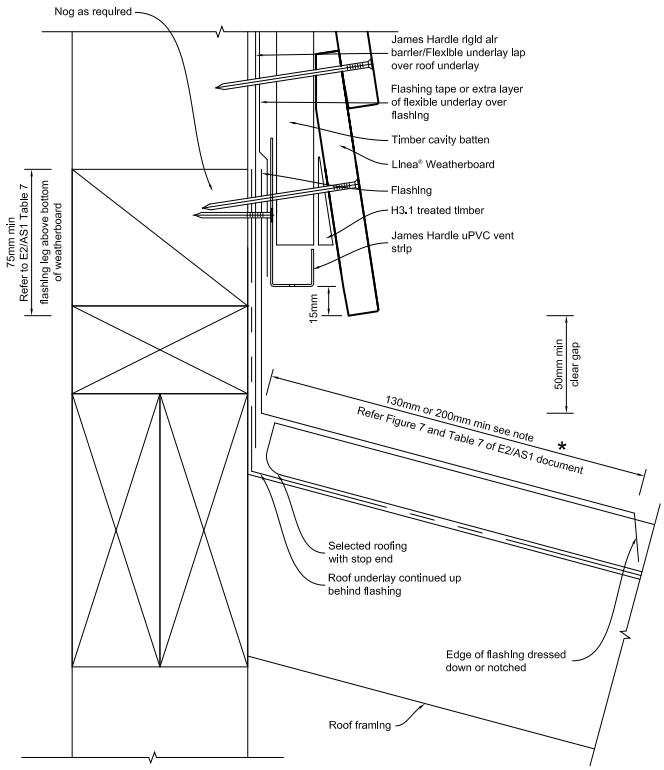

* When 50 year durability for flashing is required refer Table 20 of E2/AS1 of NZBC.

Vertical Section

Figure 47: Timber cavity one piece gutter/wall junction

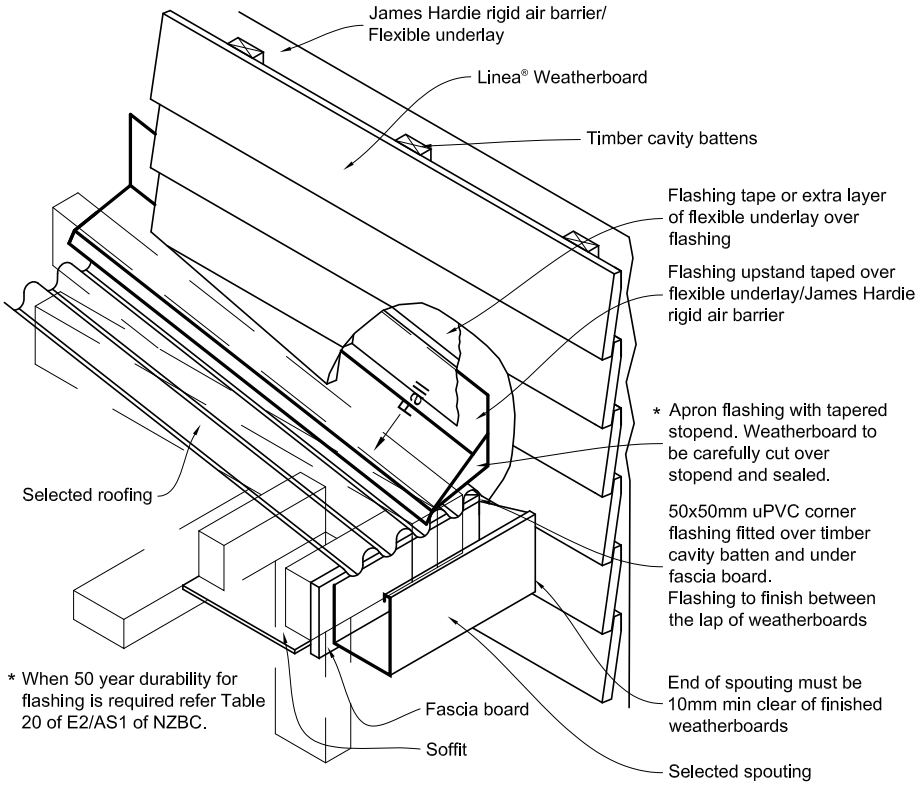

Figure 48: Timber cavity pipe penetration

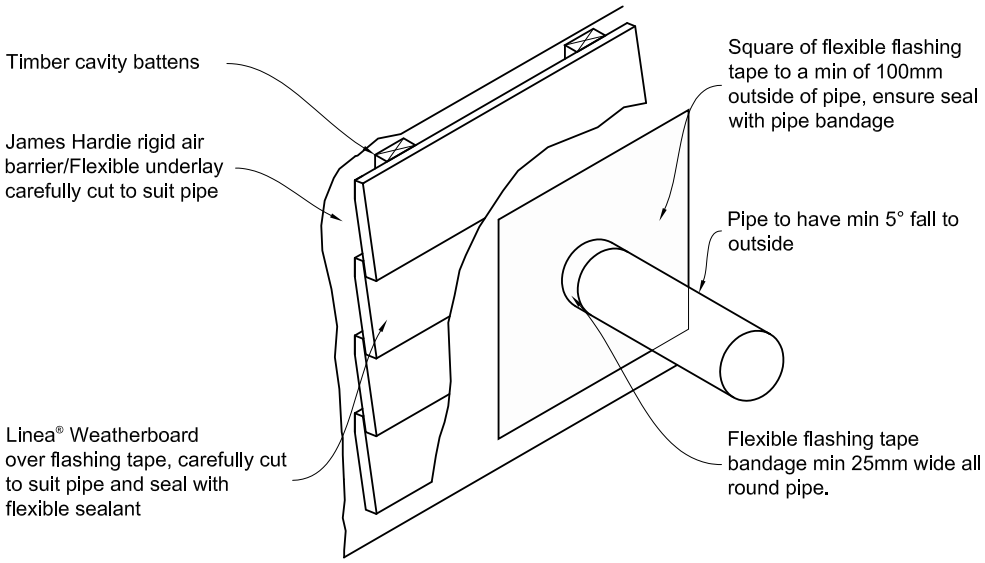

Figure 49: Timber cavity meter box at head

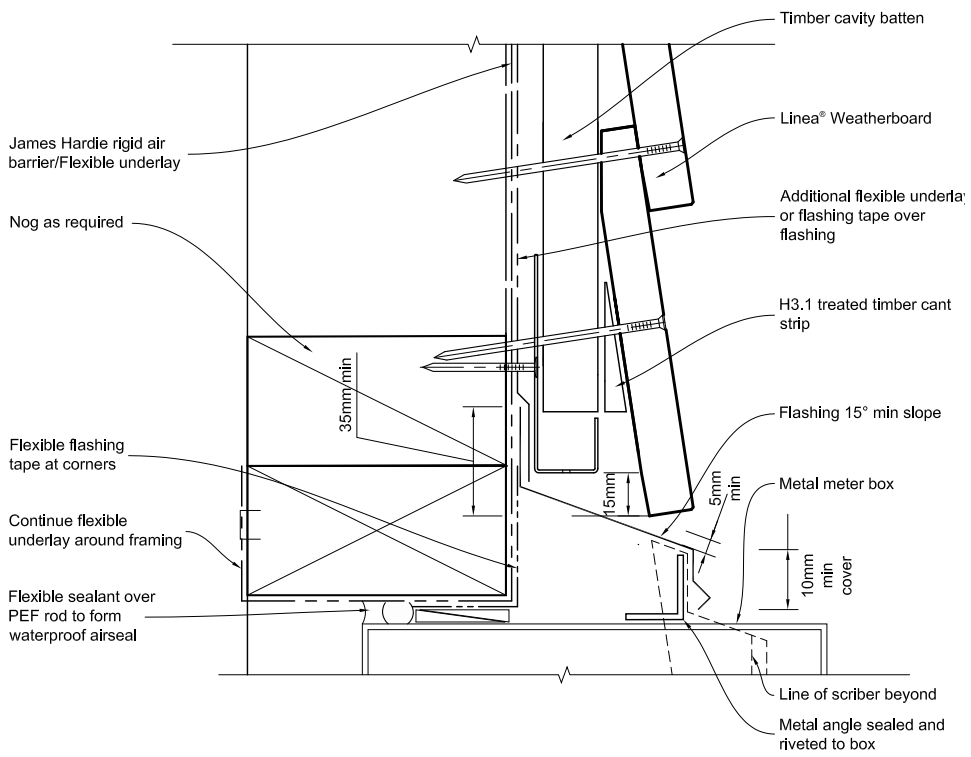

Note:
When James Hardie rigid air barrier is used flashing tape to be applied to the entire opening.

Figure 50: Timber cavity meter box at sill

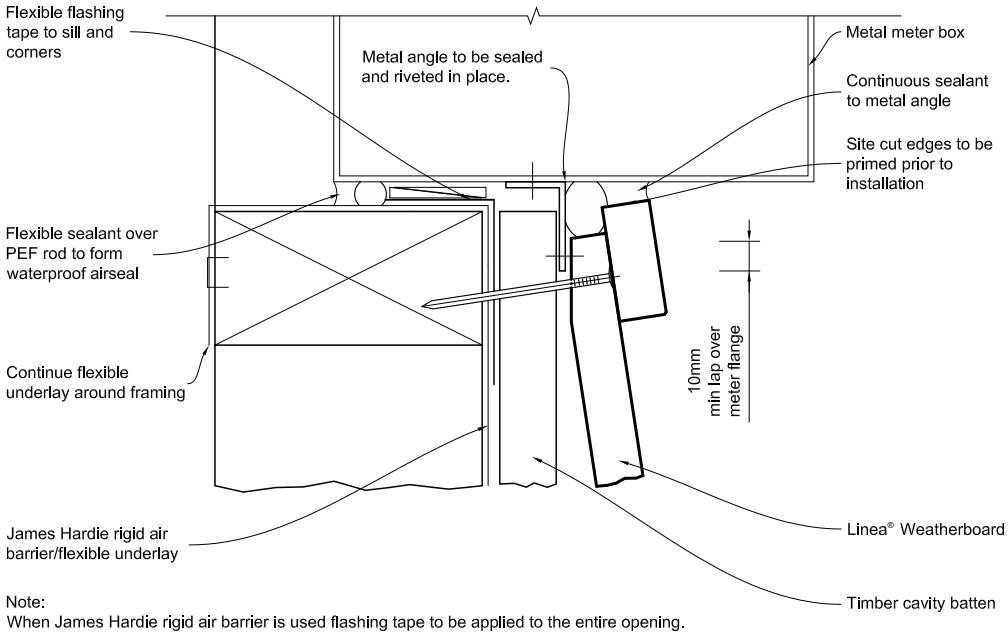

Note:
When James Hardie rigid air barrier is used flashing tape to be applied to the entire opening.

Figure 51: Timber cavity meter box head flashing at jamb

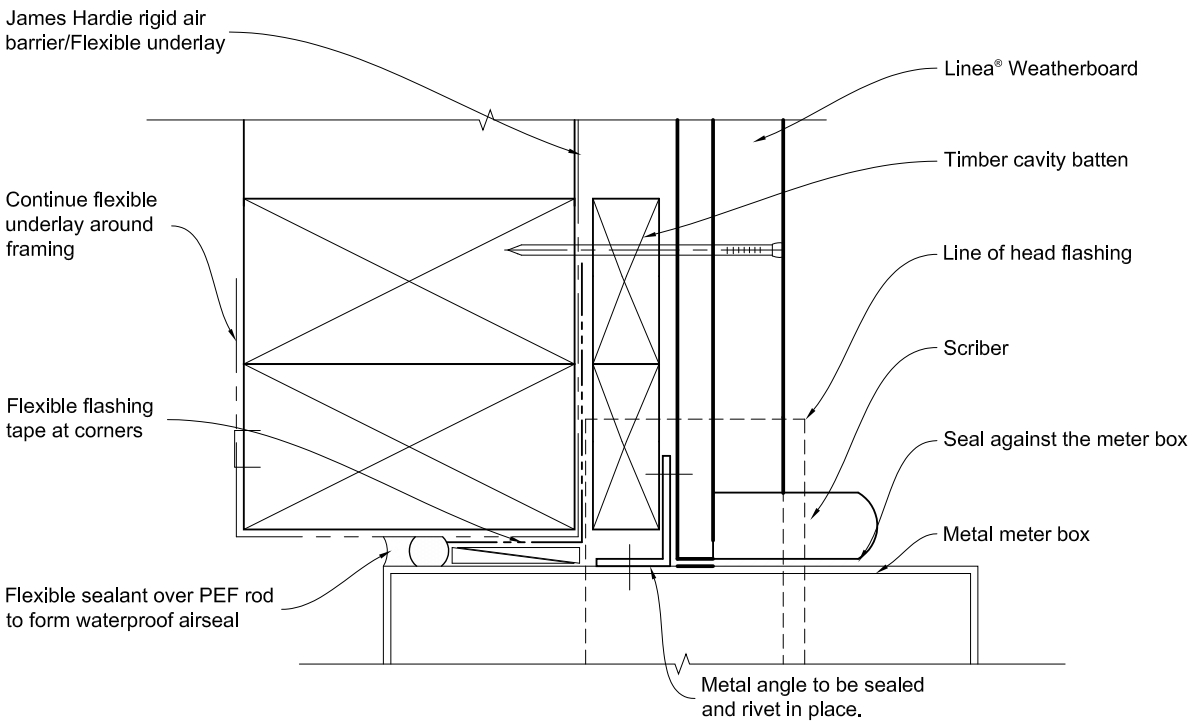

Note:
When James Hardie rigid air barrier is used flashing tape to be applied to the entire opening.

Figure 52: Timber cavity fix meter box

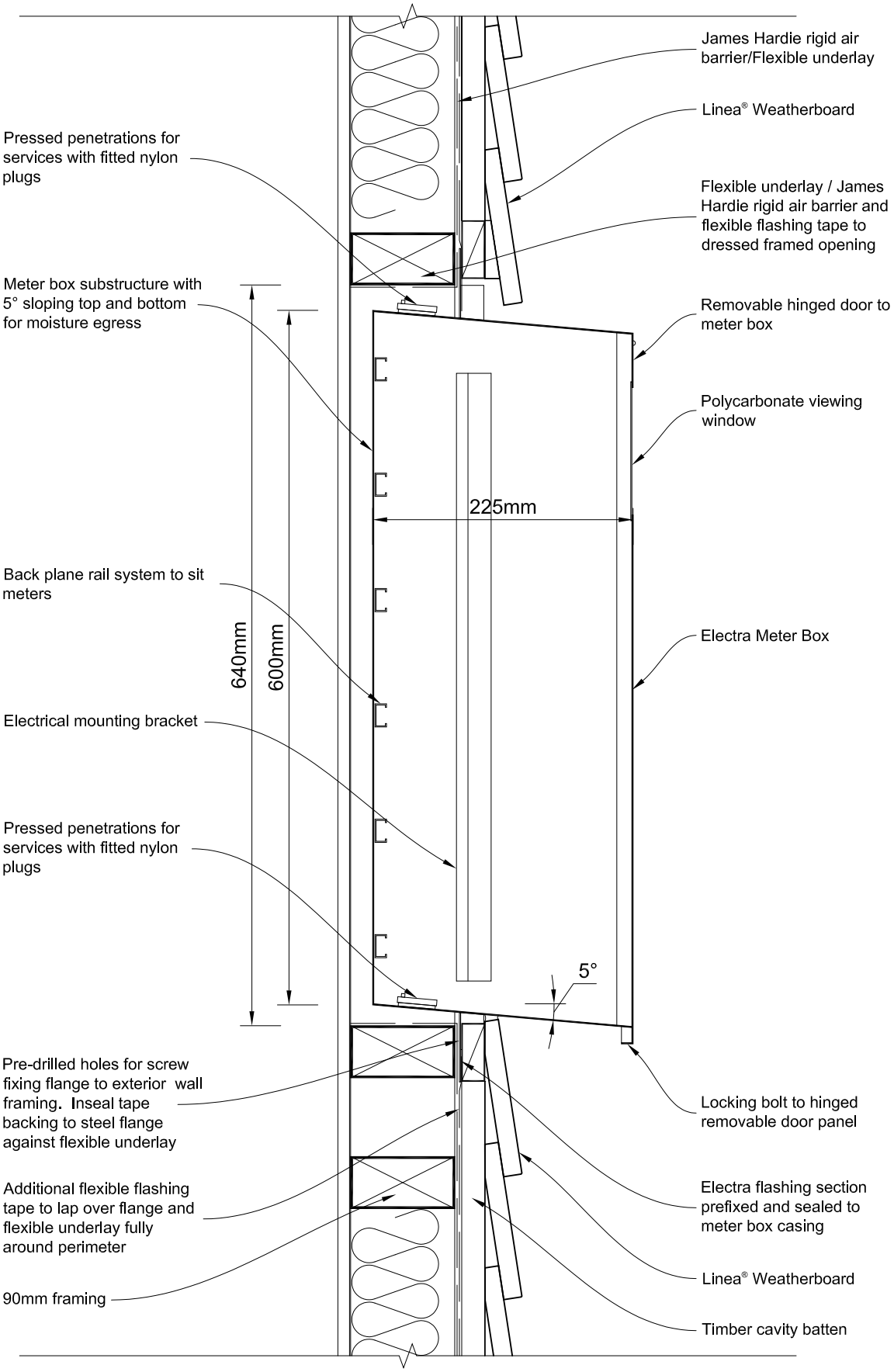

Figure 53: Floating lap over floor joist

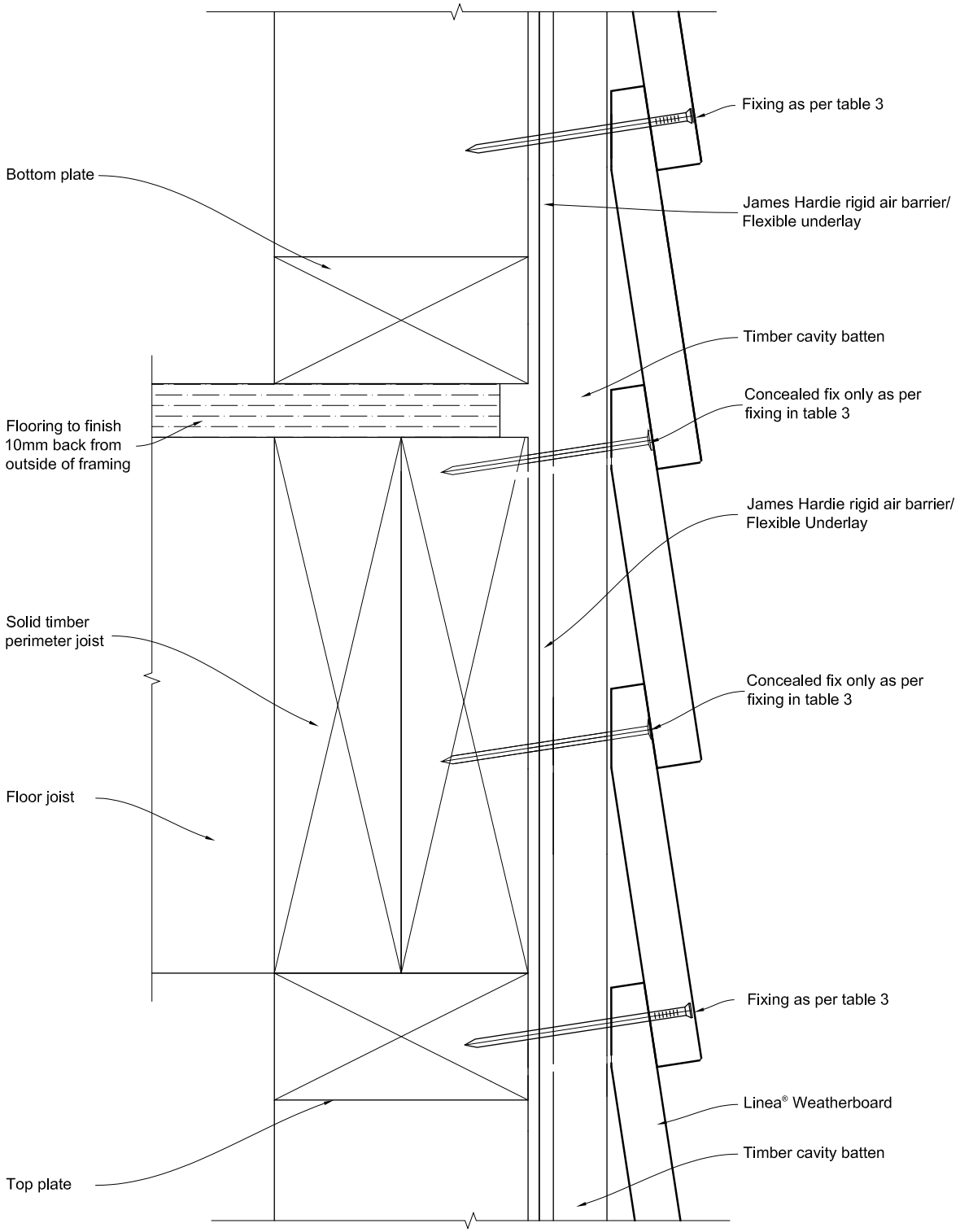

Vertical Section

Figure 54: Timber cavity drainage joint

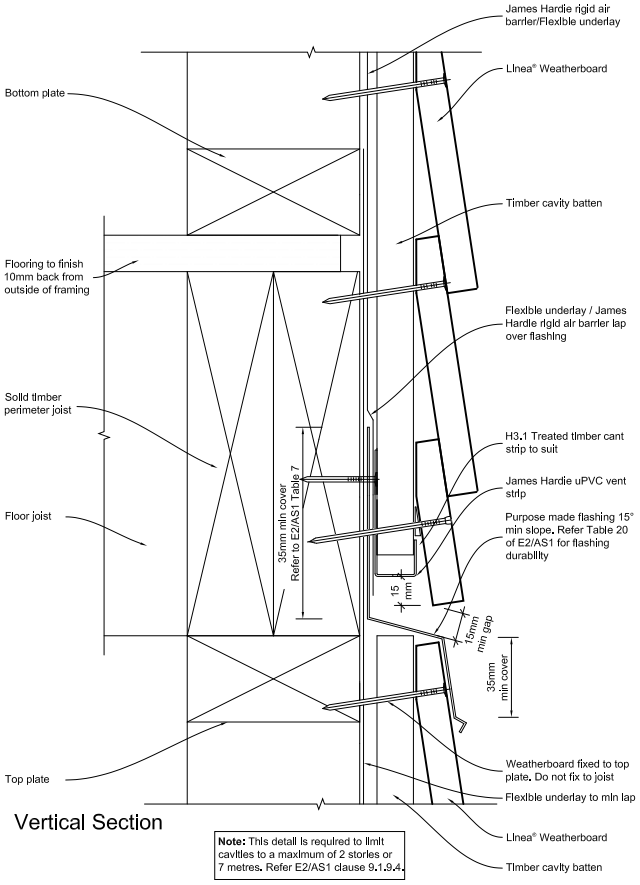

Figure 55: Timber cavity enclosed balustrade to wall

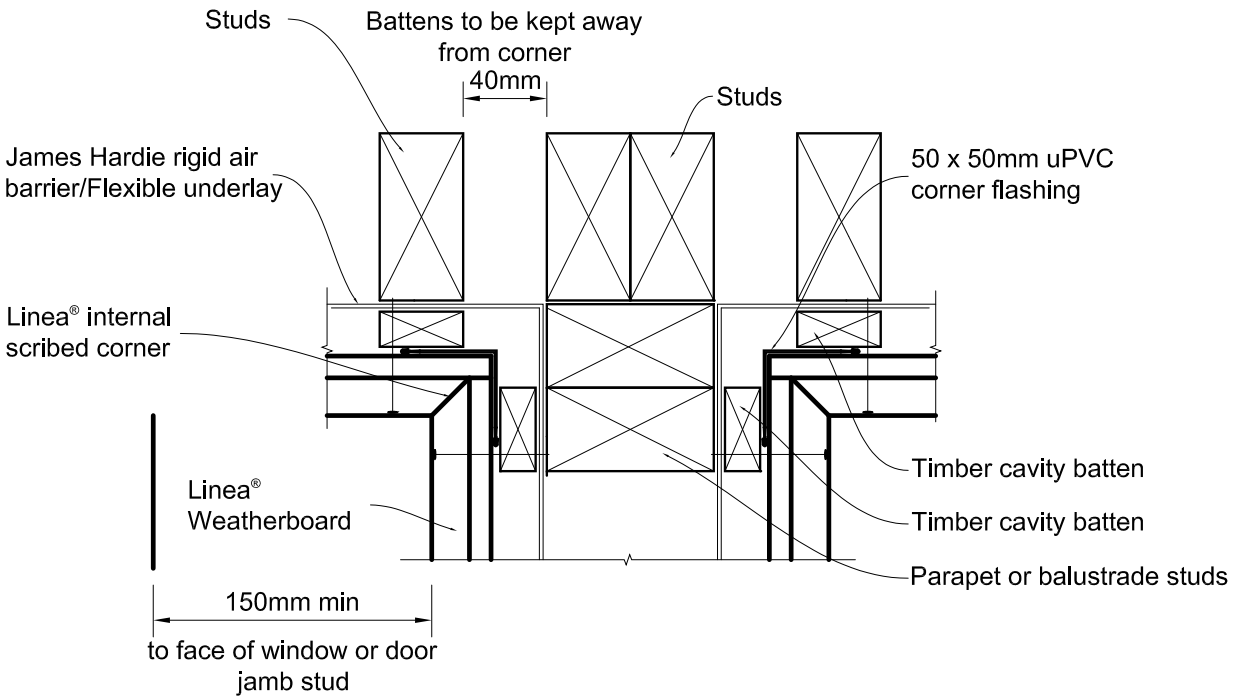

Figure 56: Timber cavity enclosed balustrade to wall

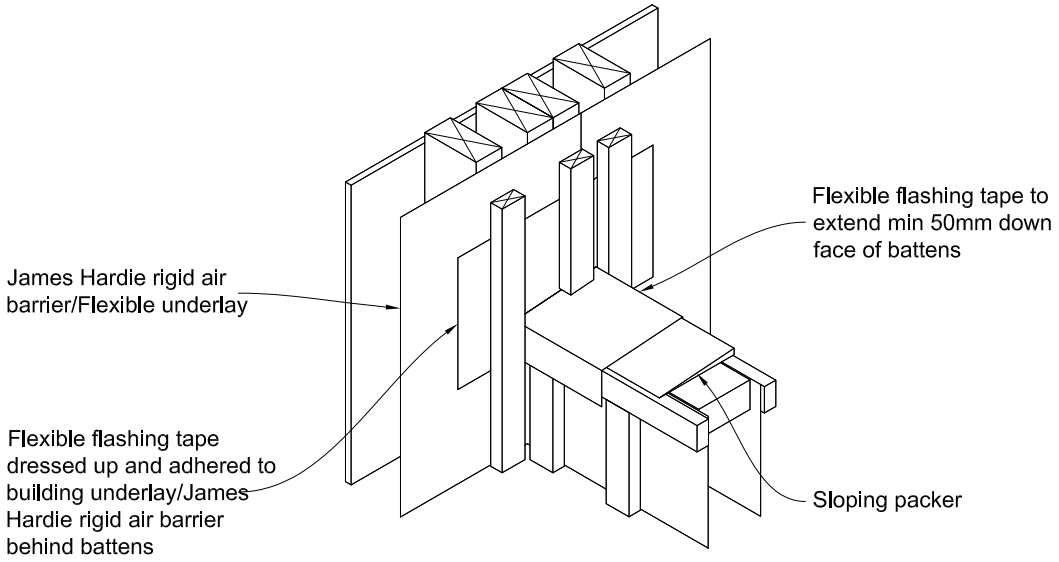

Flashing Tape Application Prior to Metal Flashing Fixing

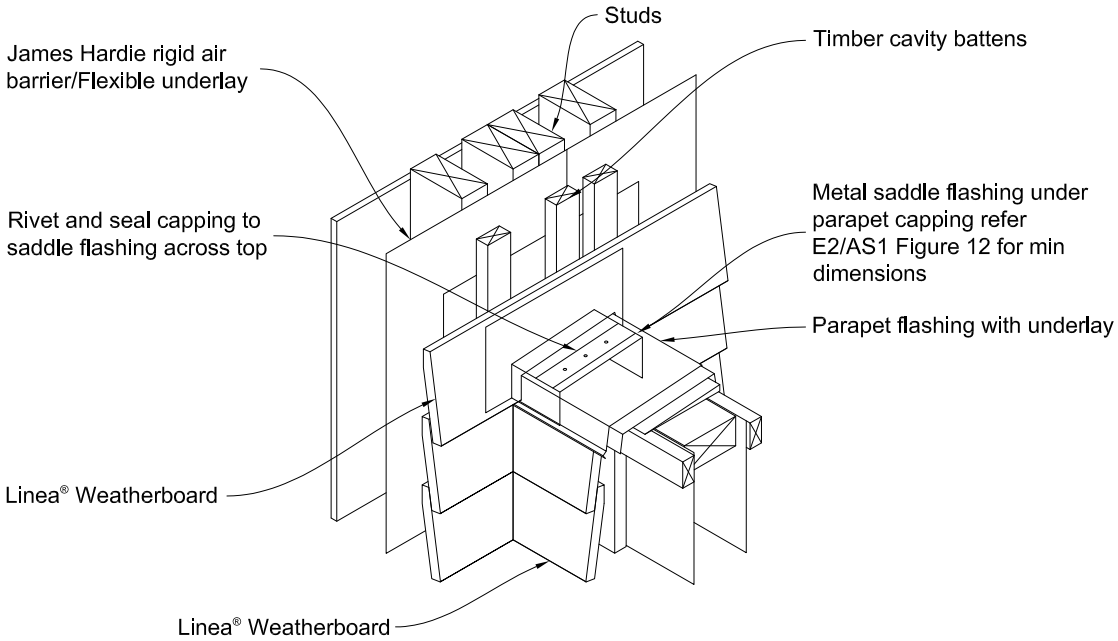

Figure 57: Timber cavity at enclosed deck

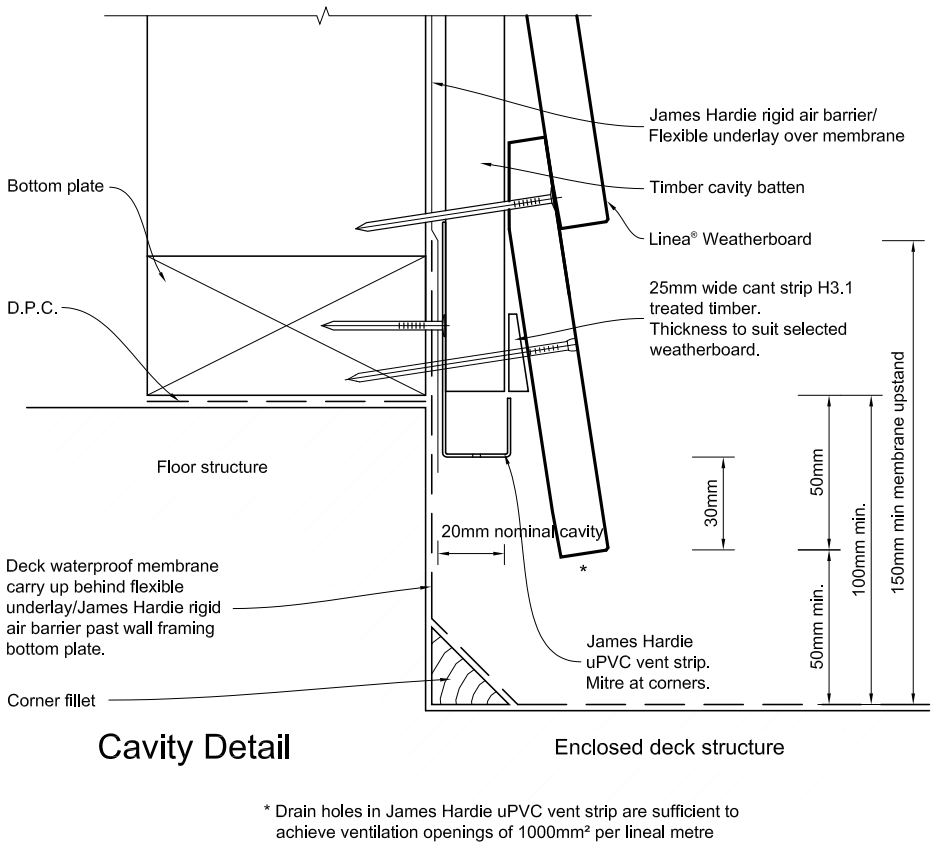

Figure 58: Timber cavity parapet flashing

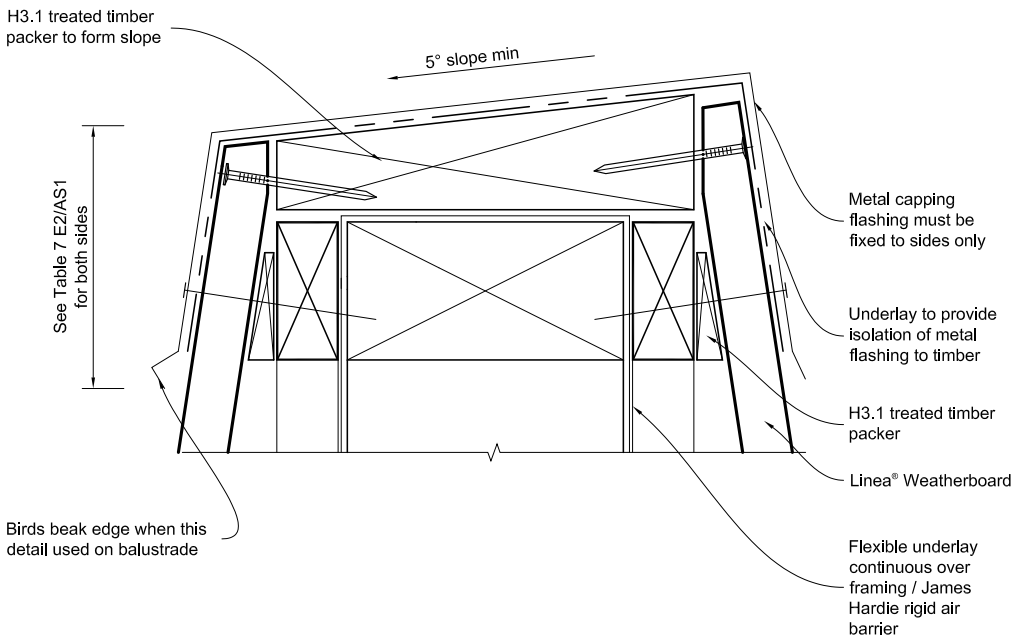

Figure 59: Linea® Weatherboard junction (section 'X') cavity to cable

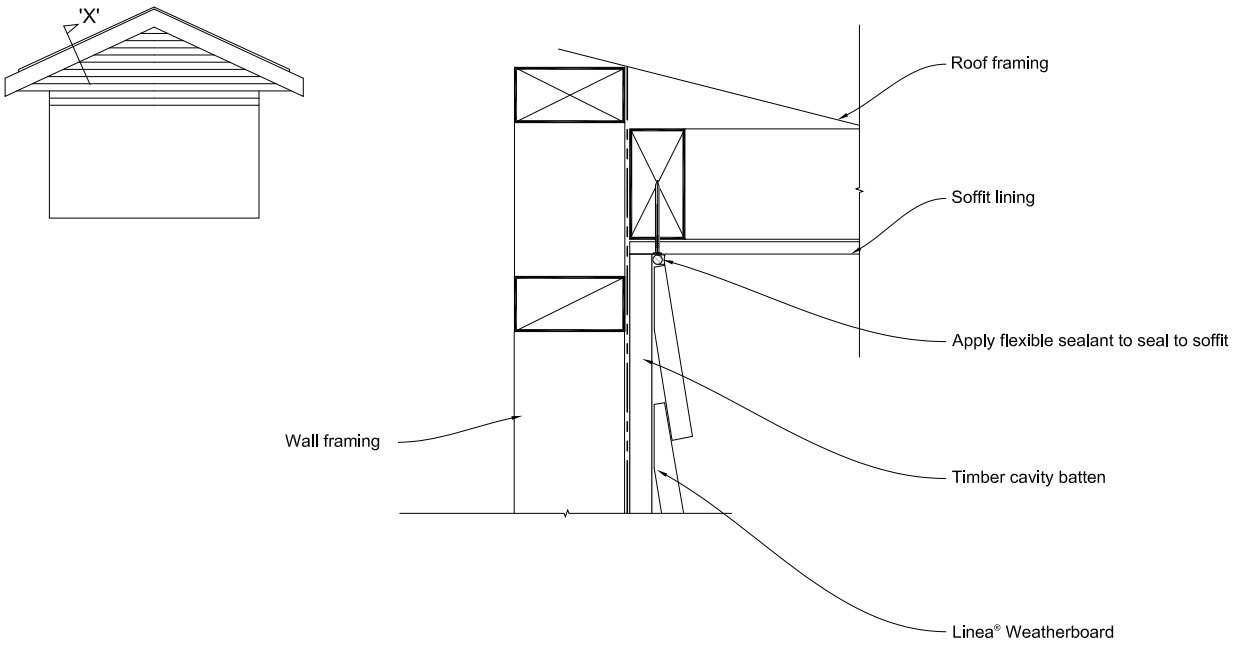

The Linea® Weatherboard must be neat cut and silicone sealed to angle of soffit

Alternatively a scotia can be scribed and sealed to Linea® Weatherboard and the soffit lining

Figure 60: Linea® Weatherboard sloping soffit and wall junction

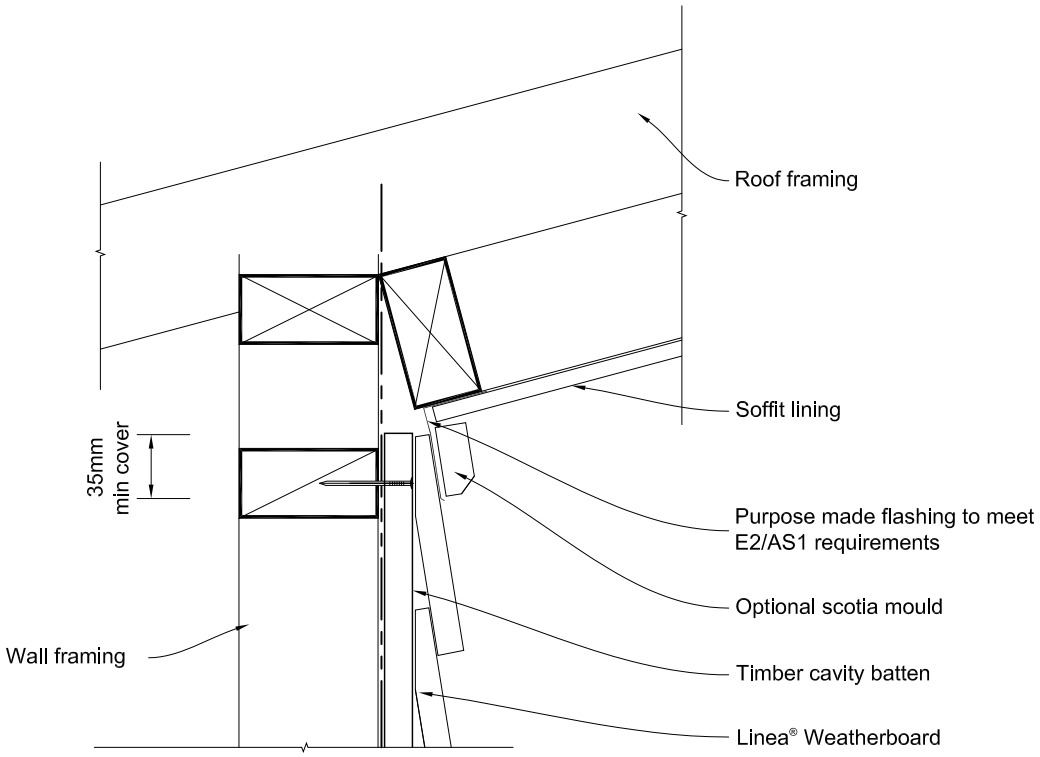

Figure 61: Timber cavity cantilevered timber deck junction

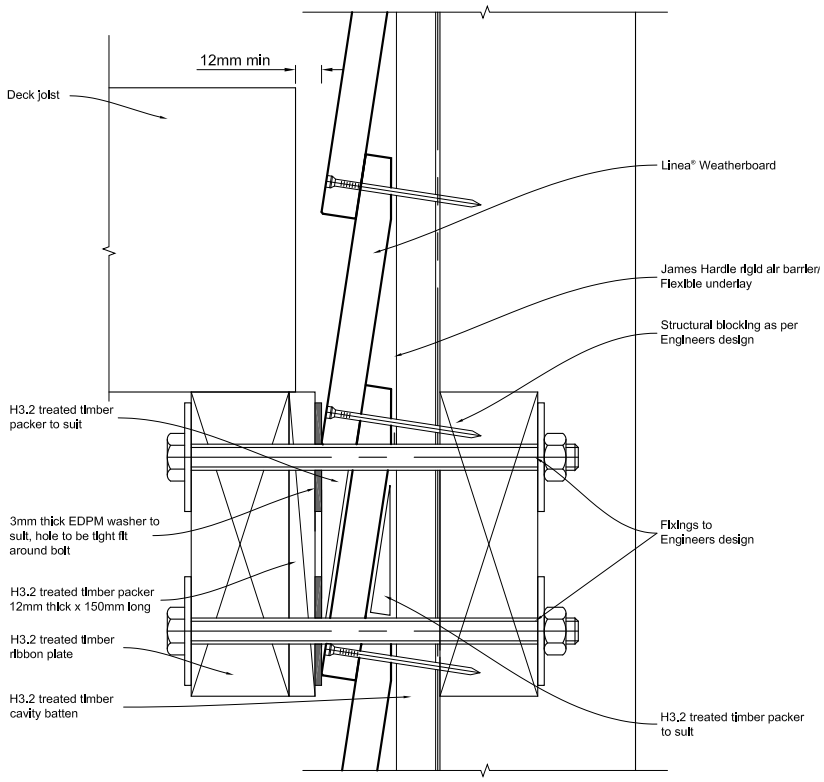

Figure 62: Linea® Weatherboard timber cavity cantilevered timber deck junction

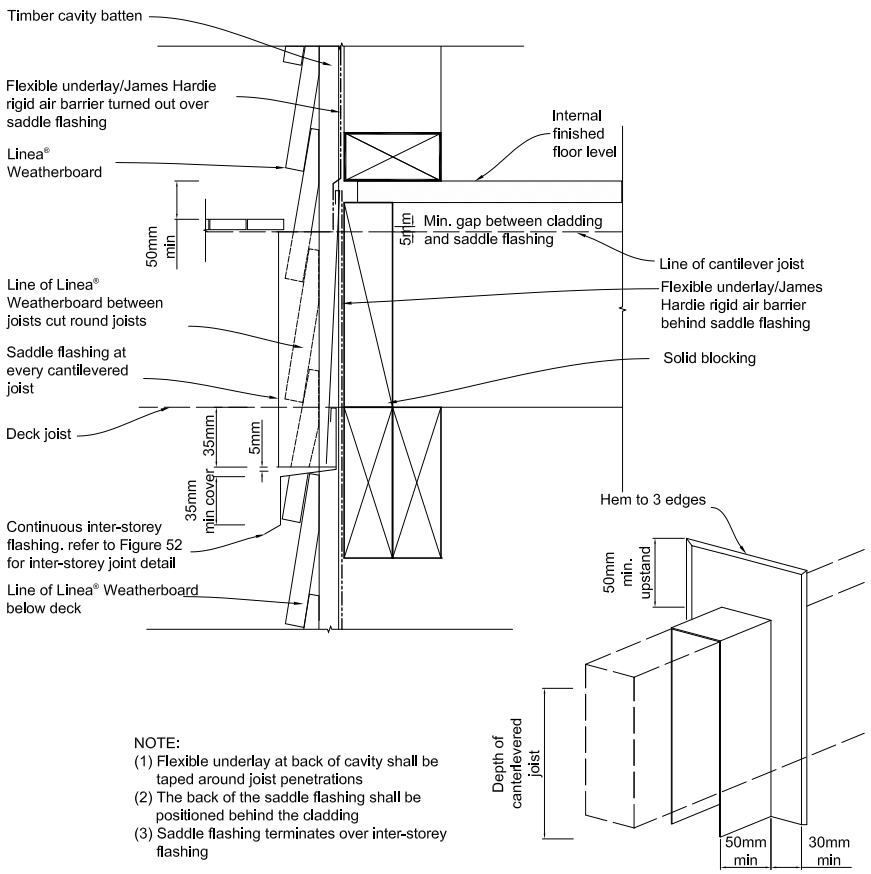

NOTE:
(1) Flexible underlay at back of cavity shall be taped around joist penetrations
(2) The back of the saddle flashing shall be positioned behind the cladding
(3) Saddle flashing terminates over inter-storey flashing

Figure 63: Door sill support detail

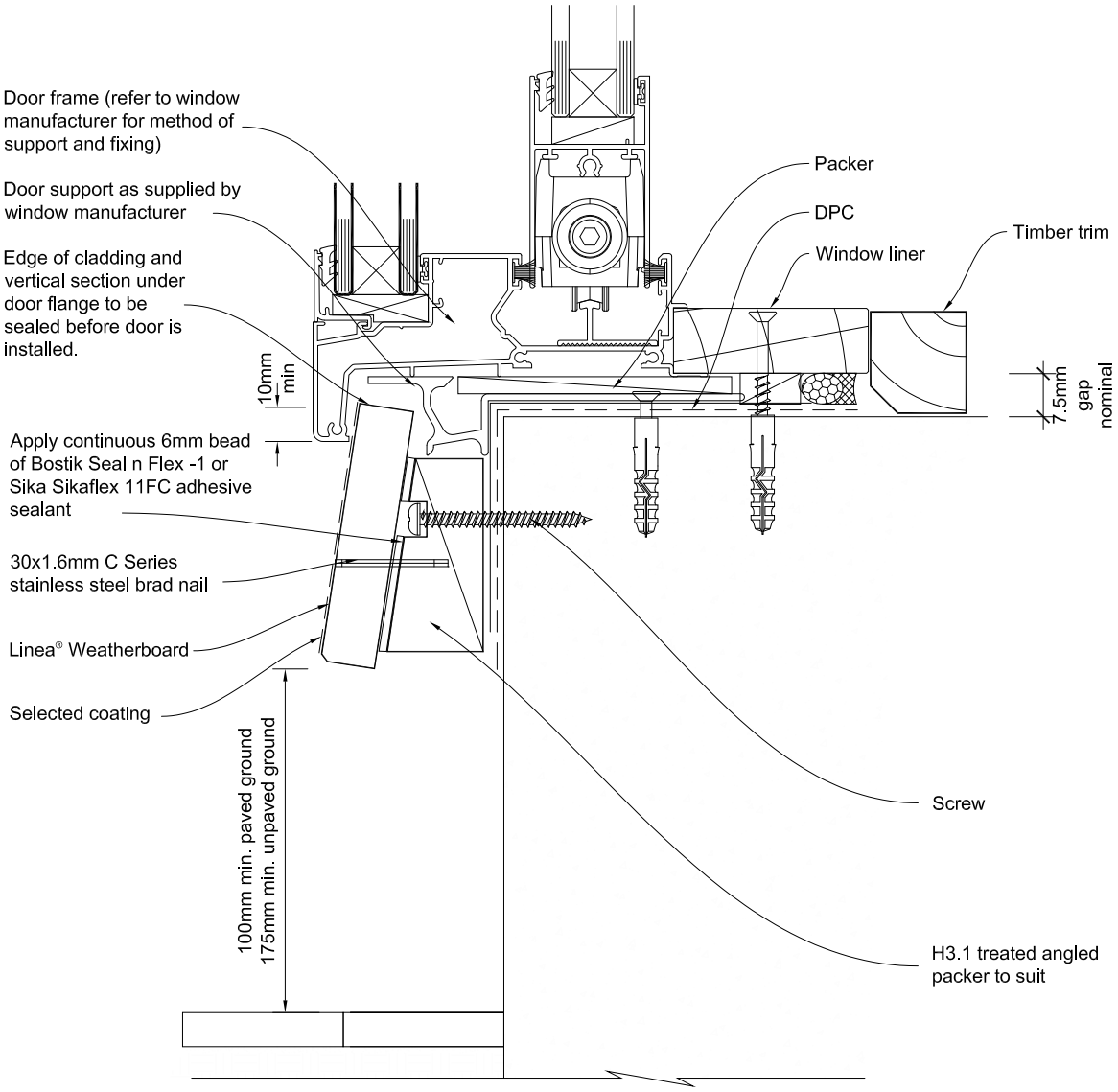

Refer to the manufacturer or supplier for technical information for these materials.

General notes for materials selection

1. Flashing materials must be selected based on environmental exposure, refer to NZS 3604 and Table 20 of the NZBC E2/AS1.
2. Building underlay must comply with acceptable solution E2/AS1.
3. Flashing tape must have proven compatibility with the selected flexible underlay and other materials with which it comes into contact.
4. Linea® Weatherboard to have sealed butt joint over batten at each corner of opening.

Figure 64: Junction between Linea® Weatherboard and fascia board

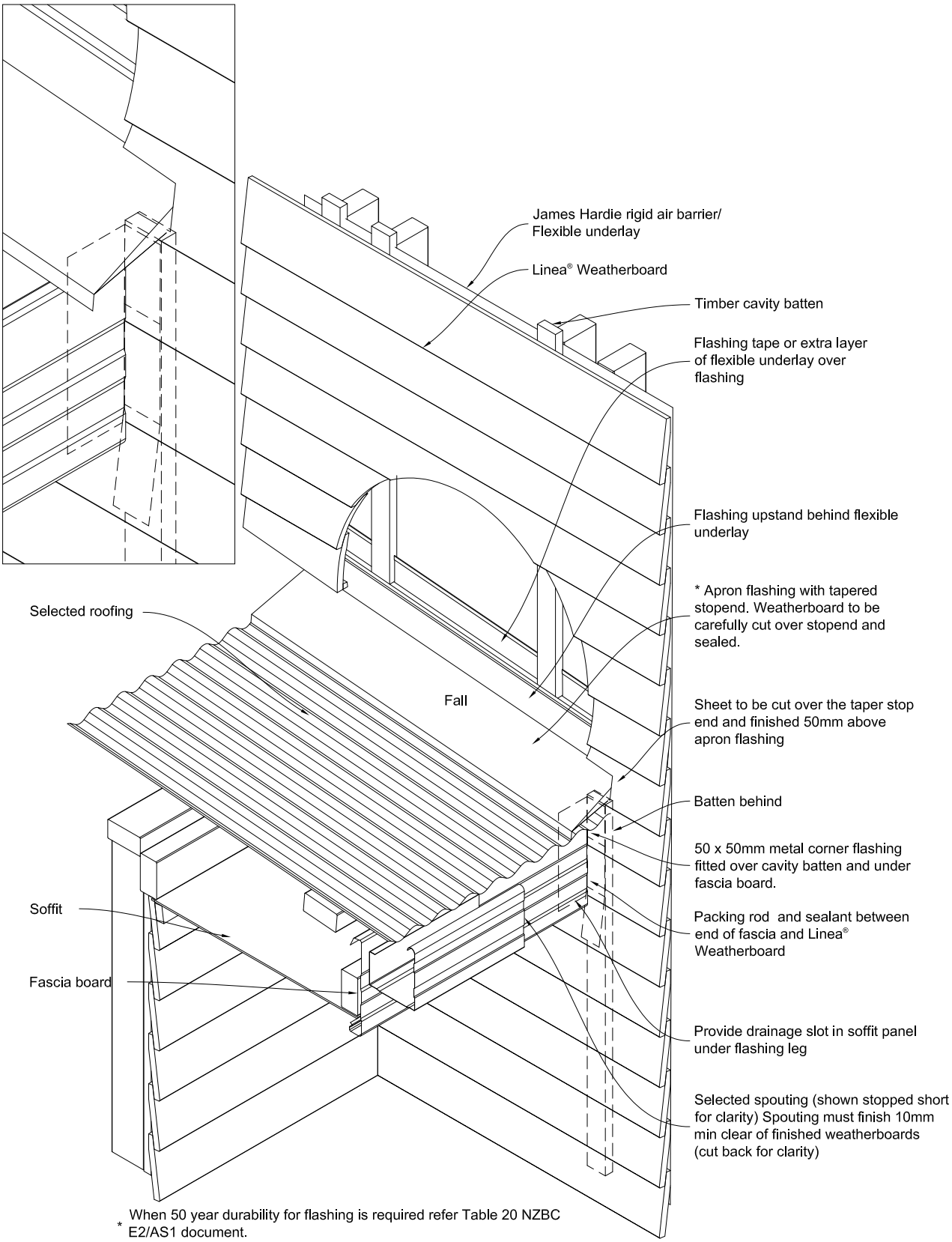

* When 50 year durability for flashing is required refer Table 20 NZBC E2/AS1 document.

Figure 65: Exclosed roof to wall intersection

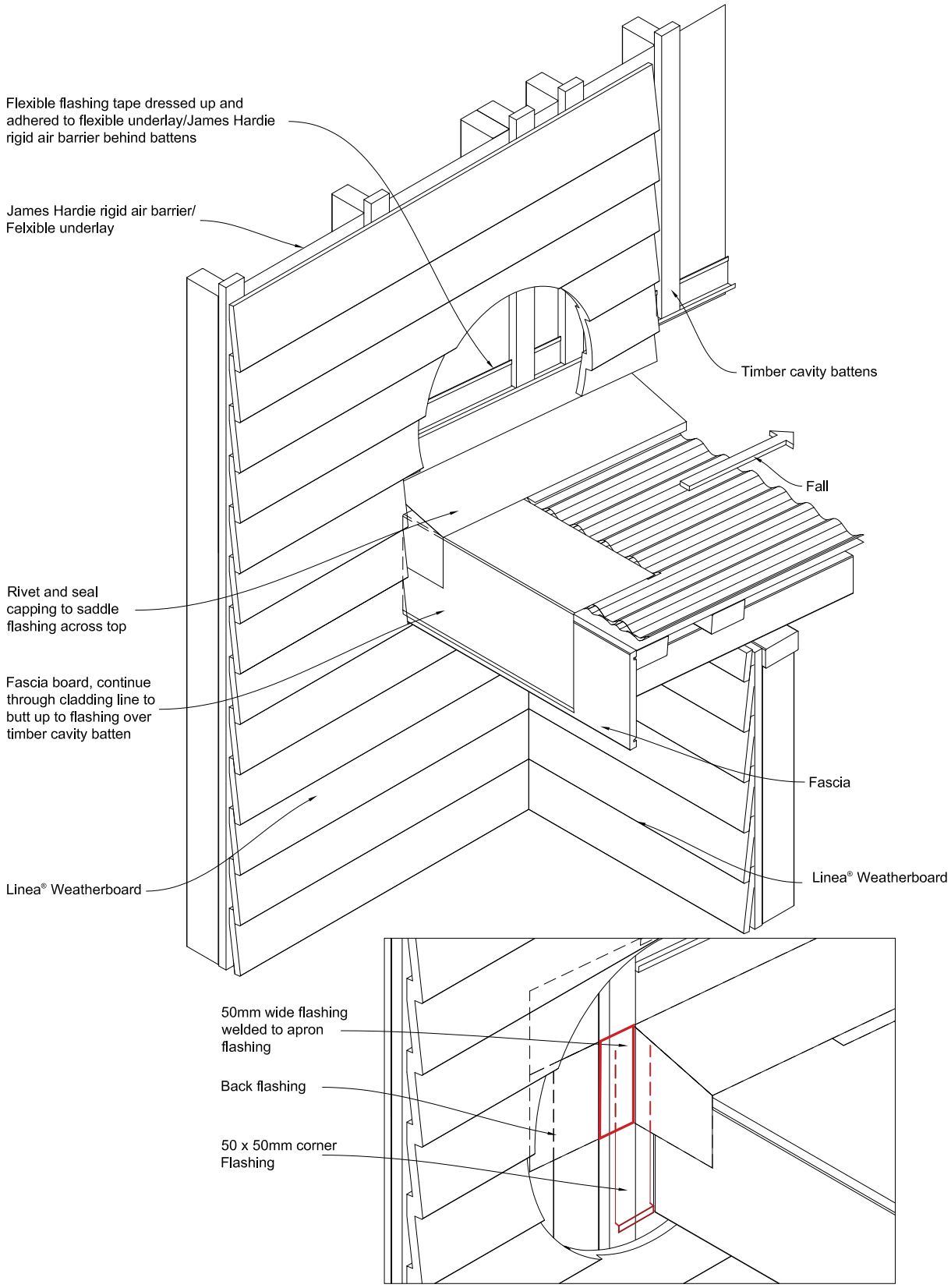

Product Warranty

Linea®
WEATHERBOARD

April 2016

Warranty: James Hardie New Zealand ("James Hardie") warrants for a period of 25 years from the date of purchase that the Linea® Weatherboard (the "Product"), will be free from defects due to defective factory workmanship or materials and, subject to compliance with the conditions below, will be resistant to cracking, rotting, fire and damage from termite attacks to the extent set out in James Hardie's relevant published literature current at the time of installation. James Hardie warrants for a period of 15 years from the date of purchase that the Axent™ Trim and accessories supplied by James Hardie will be free from defects due to defective factory workmanship or materials.

Nothing in this document shall exclude or modify any legal rights a customer may have under the Consumer Guarantees Act or otherwise which cannot be excluded or modified at law.

CONDITIONS OF WARRANTY:

The warranty is strictly subject to the following conditions:

a) James Hardie will not be liable for breach of warranty unless the claimant provides proof of purchase and makes a written claim either within 30 days after the defect would have become reasonably apparent or, if the defect was reasonably apparent prior to installation, then the claim must be made prior to installation.

b) This warranty is not transferable.

c) The Product must be installed and maintained strictly in accordance with the relevant James Hardie literature current at the time of installation and must be installed in conjunction with the components or products specified in the literature. Further, all other products, including coating and jointing systems, applied to or used in conjunction with the Product must be applied or installed and maintained strictly in accordance with the relevant manufacturer's instructions and good trade practice.

d) The project must be designed and constructed in strict compliance with all relevant provisions of the current New Zealand Building Code ("The NZBC"), regulations and standards.

e) The claimant's sole remedy for breach of warranty is (at James Hardie's option) that James Hardie will either supply replacement product, rectify the affected product or pay for the cost of the replacement or rectification of the affected product.

f) James Hardie will not be liable for any losses or damages (whether direct or indirect) including property damage or personal injury, consequential loss, economic loss or loss of profits, arising in contract or negligence or howsoever arising. Without limiting the foregoing James Hardie will not be liable for any claims, damages or defects arising from or in any way attributable to poor workmanship, poor design or detailing, settlement or structural movement and/or movement of materials to which the Product is attached, incorrect design of the structure, acts of God including but not limited to earthquakes, cyclones, floods or other severe weather conditions or unusual climatic conditions, efflorescence or performance of paint/coatings applied to the Product, normal wear and tear, growth of mould, mildew, fungi, bacteria, or any organism on any Product surface or Product (whether on the exposed or unexposed surfaces).

g) All warranties, conditions, liabilities and obligations other than those specified in this warranty are excluded to the fullest extent allowed by law.

h) If meeting a claim under this warranty involves re-coating of Products, there may be slight colour differences between the original and replacement Products due to the effects of weathering and variations in materials over time.

Disclaimer: The recommendations in James Hardie's literature are based on good building practice, but are not an exhaustive statement of all relevant information and are subject to conditions (c), (d), (f) and (g) above. James Hardie has tested the performance of Linea® Weatherboard when installed in accordance with the Linea® Weatherboard technical specification, in accordance with the standards and verification methods required by the NZBC and those test results demonstrate the product complies with the performance criteria established by the NZBC. However, as the successful performance of the relevant system depends on numerous factors outside the control of James Hardie (e.g. quality of workmanship and design) James Hardie shall not be liable for the recommendations made in its literature and the performance of the relevant system, including its suitability for any purpose or ability to satisfy the relevant provisions of the NZBC, regulations and standards, as it is the responsibility of the building designer to ensure that the details and recommendations provided in the relevant James Hardie installation manual are suitable for the intended project and that specific design is conducted where appropriate.

Copyright April 2016. © James Hardie New Zealand. TM and ® denotes a Trademark or Registered Mark owned by James Hardie Technology Limited.

Ask James Hardie™
Call 0800 808 868
www.jameshardie.co.nz

James Hardie®
a smarter way™

James Hardie
a smarter way™

Ask James Hardie™ | Call 0800 808 868 | jameshardie.co.nz

Copyright April 2016. © James Hardie New Zealand. TM and ® denotes a Trademark or Registered Mark owned by James Hardie Technology Limited.

BRANZ Appraised
Appraisal No.467 [2005]

BRANZ Appraisals

Technical Assessments of products for building and construction

BRANZ APPRAISAL No. 467 (2005)

Amended 30 August 2013

TITAN® & EXOTEC® FAÇADE PANEL RAINSCREEN

James Hardie New Zealand
P O Box 12070
Penrose
Auckland

Tel: 0800 808 868
Fax: 0800 808 988

BRANZ

BRANZ Limited
Private Bag 50 908
Porirua City
New Zealand
Tel: +64 4 237 1170
Fax: +64 4 237 1171
www.branz.co.nz

WFTAO

Product

1.1 Titan® & ExoTec® Façade Panel Rainscreen is a negative expressed joint cladding system for specific design buildings of timber frame and timber frame infill construction.

1.2 The system consists of a rigid air barrier (RAB), timber battens to form a cavity, weather seal tapes, horizontal joint socket and Titan® and ExoTec® façade panels. The Titan® and ExoTec® façade panels are finished with a latex paint system.

1.3 The system incorporates a primary and secondary means of weather resistance (first and second line of defence) against water penetration by separating the façade panels from the rigid air barrier with a nominal 20 mm cavity. The cavity allows for any occasional ingress of water that may get past the external skin to drain to the exterior of the building, and any remaining moisture to dry by evaporation.

Scope

2.1 Titan® & ExoTec® Façade Panel Rainscreen has been appraised as an external wall cladding system for buildings within the following scope:

- Importance Level I to V buildings as defined in AS/NZS 1170, except that housing and communal residential buildings that fall within the scope limitations of NZBC Acceptable Solution E2/AS1, Paragraph 1.1 are excluded; and,
- constructed with timber framing, or timber frame infill complying with the NZBC; and,
- subjected to maximum wind pressures for structural and weathertightness design of 1.0 kPa Serviceability Limit State (SLS) and 1.5 kPa Ultimate Limit State (ULS) where studs are at maximum 600 mm centres, and 3.0 kPa SLS and 4.5 kPa ULS where studs are at maximum 400 mm centres; and,
- where the maximum seismic displacement under serviceability conditions is 10 mm; and,
- where the cavity is drained and ventilated at every 10 m maximum; and,
- with a rigid air barrier installed at the back of the cavity.

2.2 All buildings incorporating Titan® & ExoTec® Façade Panel Rainscreen must be subject to specific engineering and weathertightness design. Building designers are responsible for the frame design and for the incorporation of the Titan® & ExoTec® Façade Panel Rainscreen into their design in accordance with the instructions of James Hardie Building Products.

2.3 Titan® & ExoTec® Façade Panel Rainscreen must only be installed to vertical flat surfaces.

2.4 Window and door joinery installations in the Titan® & ExoTec® Façade Panel Rainscreen system must be subject to specific weathertightness design. Building designers are responsible for verifying the performance of the joinery installation details. *(The Appraisal of Titan® & ExoTec® Façade Panel Rainscreen relies on the joinery being the subject of specific engineering design with regards to wind load and deflection for the design wind pressure.)*

2.5 The system must be installed using detailing as set out in the Technical Literature.

Readers are advised to check the validity of this Appraisal by referring to the Valid Appraisals listing on the BRANZ website, or by contacting BRANZ.

(Note: The Titan® & Exotec® Façade Panel Rainscreen system can be used to provide structural bracing and fire resistance rated construction, but these aspects have not been assessed by this Appraisal and are outside its scope.)

Building Regulations

New Zealand Building Code (NZBC)

3.1 In the opinion of BRANZ, Titan® & Exotec® Façade Panel Rainscreen if designed, used, installed and maintained in accordance with the statements and conditions of this Appraisal, will meet or contribute to meeting the following provisions of the NZBC:

Clause B1 STRUCTURE: Performance B1.3.1, B1.3.2 and B1.3.4. Titan® & Exotec® Façade Panel Rainscreen meets the requirements for loads arising from self-weight, earthquake, wind, human impact and creep [i.e. B1.3.3 (a), (f), (h), (j) and (q)]. See Paragraphs 9.1 – 9.6.

Clause B2 DURABILITY: Performance B2.3.1 (b), 15 years. Titan® & ExoTec® Façade Panel Rainscreen meets this requirement. See Paragraph 10.1.

Clause E2 EXTERNAL MOISTURE: Performance E2.3.2. Titan® & Exotec® Façade Panel Rainscreen meets this requirement. See Paragraphs 14.1 – 14.6.

Clause F2 HAZARDOUS BUILDING MATERIALS: Performance F2.3.1. Titan® & Exotec® Façade Panel Rainscreen meets this requirement and will not present a health hazard to people.

3.2 This is an Appraisal of an **Alternative Solution** in terms of New Zealand Building Code compliance.

Technical Specification

4.1 System components and accessories for Titan® & Exotec® Façade Panel Rainscreen which are supplied by James Hardie New Zealand Ltd are:

Fibre Cement Sheets

- Titan® façade panels are medium density fibre cement produced with a smooth face and are sealed with an acrylic primer on the front and back face and all four edges. The sheets are 9 mm thick and are available 1190 mm wide by 2400, 2700 and 3000 mm long.
- ExoTec® façade panels are high density compressed fibre cement produced with a smooth face and are sealed with an acrylic primer on the front and back face and all four edges. The sheets are 9 mm thick and are available 1190 mm wide by 1800, 2400 and 3000 mm long.
- RAB sheets are produced with a smooth face and are sealed with an acrylic primer on the front face and all four edges. The sheets are 5.5 mm thick and are available 1200 mm wide by 2400 and 3000 mm long.
- The Titan® & Exotec® façade panels and RAB sheets are manufactured from cellulose fibre cement. The sheets are formed, cut to length and then cured by high-pressure autoclaving. They are manufactured to meet the requirements of AS/NZS 2908.2.

Accessories

- Cavity batten packer – 3 mm thick by 40 mm wide fibre cement manufactured to meet the requirements of AS/NZS 2908.2. The packers are available in 1200 mm lengths.
- Aluminium socket – manufactured from Grade 5005 aluminium alloy. It is extruded 1.2 mm thick by 82 mm wide with a 9 mm wide T-lip located 45 mm down from the top edge. The socket is available in 2400 and 3000 mm lengths.
- Inseal® 3259 Tape – black, compressible, medium density PVC (Polyvinyl Chloride) closed-cell foam. The foam is coated on one face with pressure sensitive acrylic adhesive. The other face is covered by a silicone release paper. The tape is 1.5 mm thick and is supplied in rolls 50 and 80 mm wide and 50 m long.
- Inseal® 3109/Butyl Tape – 1 mm thick black Butyl rubber membrane with 6 x 9 mm Inseal® 3109 adhered along each edge of one face with an acrylic adhesive. Inseal® 3109 is compressible, black, low density PVC foam. The tape is supplied in rolls 50 and 80 mm wide and 12 m long.
- Cavity vent strip – uPVC, available in 2700 mm lengths.

4.2 Accessories used with Titan® & Exotec® Rainscreen which are supplied by the building contractor are:

- Cavity battens – nominal 50 mm wide by 25 mm thick (minimum finished size of 45 mm wide by 18 mm thick) timber treated to Hazard Class H3.1.
- Timber packers – nominal 50 mm wide by 25 mm thick (minimum finished size of 45 mm wide by 18 mm thick) timber treated to Hazard Class H3.1.
- Joinery flashings – folded from aluminium or galvanised steel to specific weathertightness design to suit the window or door trim opening. Refer to NZS 3604, Section 4 and NZBC Acceptable Solution E2/AS1, Table 20 for durability requirements.
- Horizontal drained joint flashing – folded from aluminium or galvanised steel to specific weathertightness design. Refer to NZS 3604, Section 4 and NZBC Acceptable Solution E2/AS1, Table 20 for durability requirements.
- Flexible sealant – sealant covered by a valid BRANZ Appraisal for use as a weather sealing sealant for exterior use.
- RAB sheet fixings – 40 x 2.8 mm hot-dip galvanised flat head Hardiflex nails.
- Cavity batten fixings – 40 x 2.8 mm hot-dip galvanised flat head Hardiflex nails.
- Titan® façade panel fixings – 65 x 10g Grade 316 stainless steel wood screws, or 60 x 3.15 mm hot-dip galvanised or Grade 316 stainless steel, ring shank Hardiflex nails. (Note: The screw head must be minimum 9 mm diameter.)
- ExoTec® façade panel fixings - 65 x 10g Grade 316 stainless steel wood screws. *(Note: The screw head must be minimum 9 mm diameter.)*

Paint System Specification

4.3 All exposed façade panel surfaces (including panel edges) must be finished with a latex exterior paint system complying with any of Parts 7, 8, 9 or 10 of AS 3730. Proprietary paint systems, including fillers have not been assessed, and are outside the scope of this Appraisal.

Handling and Storage

5.1 Handling and storage of all materials supplied by James Hardie New Zealand Ltd and the building contractor, whether on or off site, is under the control of the building contractor. The Titan® and Exotec® façade panels and RAB sheets must be stacked flat, off the ground and supported on a level platform. They must be kept dry at all times either by storing under cover or providing waterproof covers to the stack. Care must be taken to avoid damage to edges, ends and surfaces. Sheets must always be carried on edge.

5.2 Cavity battens and other accessories must be stored so they are kept clean, dry and undamaged. All accessories must be used within the maximum storage period recommended.

Technical Literature

6.1 Refer to the Appraisals listing on the BRANZ website for details of the current Technical Literature for Titan® & Exotec® Façade Panel Rainscreen. The Technical Literature must be read in conjunction with this Appraisal. All aspects of design, use, installation and maintenance contained in the Technical Literature and within the scope of this Appraisal must be followed.

Design Information

Framing

Timber Treatment

7.1 Timber wall framing behind the Titan® & Exotec® Façade Panel Rainscreen system must be treated as required by NZBC Acceptable Solution B2/AS1.

Timber Framing

7.2 Timber framing must be minimum No. 1 framing grade in accordance with NZS 3631. The building designer is responsible for the framing design using wind pressures calculated in accordance with AS/NZS 1170 considering local factors. Some guidance is given within the Technical Literature.

7.3 Nominal 75 mm wide studs must be provided at all vertical RAB sheet and façade panel edges. *(This can also be achieved by nailing two nominal 50 mm wide studs together.)*

7.4 Timber framing must have a maximum moisture content of 24% at the time of the RAB sheet application. *(If RAB sheets are fixed to framing with a moisture content of greater than 24% problems may occur at a later date due to excessive timber shrinkage.)*

Fibre Cement Sheet Setout

7.5 All vertical and horizontal RAB sheet edges must be supported and fixed directly to the wall framing. At the base of the wall, the RAB sheet must hang 8 mm below the supporting framing.

7.6 All vertical Titan® & Exotec® façade panel edges must be supported and fixed through the cavity battens to the wall framing. At the base of the wall, the Titan® and Exotec® panels must hang 50 mm below the supporting framing.

General

8.1 Punchings in the cavity vent strip provide a minimum ventilation opening area of 1000 mm^2 per lineal metre of wall.

8.2 At ground level, the bottom edge of the Titan® & Exotec® Façade Panel Rainscreen system must be kept clear of paved surfaces, such as footpaths, by a minimum of 100 mm and unpaved surfaces by 175 mm in accordance with NZBC Acceptable Solution E2/AS1, Table 18. The ground clearances to finished floor levels as set out in Table 18 must be adhered to at all times.

8.3 The rainscreen must be drained every 10 m maximum. Horizontal Titan® & Exotec® façade panel joints at intermediate floor levels, or sheet joints between floor levels may be formed using the aluminium socket to create a negative expressed non-drained joint.

8.4 The aluminium socket must not be allowed to come into contact with treated timber battens that contain copper (e.g. CCA, copper azole or ACQ). The socket must be separated from the battens by the fibre cement packer.

8.5 Where the system abuts other cladding systems, the building designer must detail the junction to meet their own requirements and the performance requirements of the NZBC. Details not included in the Technical Literature have not been assessed and are outside the scope of this Appraisal.

Structure

Mass

9.1 The mass of the Titan® & Exotec® Façade Panel Rainscreen system is approximately 22 kg/m^2 at equilibrium moisture content.

Impact Resistance

9.2 The system will resist human impact loads likely to be encountered. The likelihood of damage to the system from other soft and hard body impacts should be considered at the design stage, and appropriate protection such as the installation of bollards and barriers provided for vulnerable areas.

Wind Loading

9.3 The system is suitable for use when subjected to maximum wind pressures of 1.0 kPa Serviceability Limit State (SLS) and 1.5 kPa Ultimate Limit State (ULS) where studs are at 600 mm centres, and 3.0 kPa SLS and 4.5 kPa ULS where studs are at 400 mm centres.

Seismic Loading

9.4 The system is suitable for use where the maximum seismic displacement is 10 mm under serviceability conditions.

RAB Sheet Fixing

9.5 The RAB sheets must be fixed to the wall framing (studs and nogs) at maximum 300 mm centres. The fixings must be installed a minimum of 12 mm from the edge of the sheet.

Titan® & Exotec® Façade Panel Fixing

9.6 Titan® & Exotec® façade panels must be fixed through the cavity battens to the wall framing at maximum centres as specified in Table 1. The fixings must be installed a minimum of 18 mm from the edge of the sheet.

Table 1: Titan® & Exotec® Façade Panel Fixing Centres

Façade Panel	Maximum Stud Spacing (mm)	Fixing Type	Maximum Fixing Centres to Edge of Sheet (mm)	Maximum Fixing Centres to Body of Sheet (mm)
Titan®	600	60 x 3.15 mm Hardiflex nail	200	250
Titan® and ExoTec®	600	65 x 10g wood screw	200	300
Titan®	400	60 x 3.15 mm Hardiflex nail	150	150
Titan® and Exotec®	400	65 x 10g wood screw	200	200

Durability

Serviceable Life

10.1 Provided the Inseal® 3259 tape and Inseal® 3109 foam component of the Inseal® 3109/Butyl Tape is not exposed to the weather or ultra-violet (UV) light for a total of more than 30 days; and provided the system is maintained in accordance with this Appraisal, and the Titan® & Exotec® façade panels and fixings are continuously protected by a weathertight coating and remain dry in service, Titan® & Exotec® Façade Panel Rainscreen is expected to have a serviceable life of at least 15 years. If the Inseal® 3259 tape or Inseal® 3109 foam component of the Inseal® 3109/Butyl Tape is exposed to the weather or UV light for a total of more than 30 days, then it must be replaced with new material.

10.2 Microclimatic conditions, including geothermal hot spots, industrial contamination and corrosive atmospheres, and contamination from agricultural chemicals or fertilisers can convert mildly corrosive atmosphere into aggressive environments for fasteners. The fixing of the Titan® & ExoTec® Facade Panel Rainscreen in areas subject to microclimatic conditions requires specific design in accordance with NZS 3604 Paragraph 4.2.4, and is outside the scope of this Appraisal.

Maintenance

11.1 Regular maintenance is essential for Titan® & Exotec® Façade Panel Rainscreen installations to continue to meet the NZBC durability performance provision and to maximise the serviceable life of the system.

11.2 Annual inspections must be made to ensure that all aspects of the cladding system, including the paint coating system, flashings, weather seal tapes and any sealed joints remain in a weatherproof condition. Any damaged areas or areas showing signs of deterioration which would allow water ingress must be repaired immediately. Sealant, paint coatings and the like must be repaired in accordance with the sealant or paint coating manufacturer's instructions.

11.3 Regular cleaning (at least annually) of the paint coating surface is required to remove grime, dirt and organic growth and to maximise the life and appearance of the coating. Paint systems must be recoated at approximately 5-10 yearly intervals in accordance with the paint manufacturer's instructions.

11.4 Minimum ground clearances as set out in this Appraisal and the Technical Literature must be maintained at all times during the life of the system. *(Failure to adhere to the minimum ground clearances given in this Appraisal and the Technical Literature will adversely affect the long term durability of the Titan® & Exotec® Façade Panel Rainscreen system.)*

Control of External Fire Spread

12.1 Titan® & Exotec® Façade Panels are a non combustible material. When Titan® & Exotec® Façade Panels are finished with a paint coating of not more that 1.0 mm in thickness, the exterior surface finishes requirements of NZBC Acceptable Solution C/AS1 Table 5 and NZBC Acceptable Solutions C/AS2 – C/AS6 Paragraph 5.8.1 do not apply in accordance with NZBC Acceptable Solution C/AS1 Paragraph 5.4 and NZBC Acceptable Solutions C/AS2 – C/AS6 Paragraph 5.8.2 a).

Prevention of Fire Occurring

13.1 Titan® & Exotec® Façade Panels are considered a non-combustible material and need not be separated from heat sources such as fire places, heating appliances, flues and chimneys. However, when used in conjunction with, or attached to heat sensitive materials, the heat sensitive material must be separated from fireplaces, heating appliances, flues and chimneys in accordance with the requirements of Part 7 of NZBC Acceptable Solutions C/AS1 – C/AS6 and NZBC Verification Method C/VM1.

External Moisture

14.1 The Titan® & Exotec® Façade Panel Rainscreen system has been tested in accordance with the requirements of AS/NZS 4284 up to 4.5 kPa ULS (refer to Paragraph 2.1). This test method is designed to verify the performance of commercial building facades. *(Titan® & Exotec® Façade Panel Rainscreen has not been tested in accordance with the requirements of the housing and communal residential building test method, NZBC Verification Method E2/VM1.)*

14.2 Titan® & Exotec® Façade Panel Rainscreen, when installed in accordance with this Appraisal and the Technical Literature, prevents the penetration of moisture that could cause undue dampness or damage to building elements.

14.3 The cavity must be sealed off from the roof and sub-floor space to meet code compliance with NZBC Clause E2.3.5.

14.4 Titan® & Exotec® Façade Panel Rainscreen allows excess moisture present at the completion of construction to be dissipated without permanent damage to building elements to meet code compliance with NZBC Clause E2.3.6.

14.5 The details given in the Technical Literature for weather sealing are based on the design principle of having a first and second line of defence against moisture entry for all joints, penetrations and junctions. Weathertightness details that are developed by the designer are outside the scope of this Appraisal and are the responsibility of the designer for compliance with the NZBC.

14.6 The use of Titan® & Exotec® Façade Panel Rainscreen where there is a designed cavity drainage path for moisture that penetrates the cladding, does not reduce the requirement for junctions and penetrations to remain weather resistant.

Installation Information

Installation Skill Level Requirements

15.1 Installation of Titan® & Exotec® Façade Panel Rainscreen components and accessories supplied by James Hardie New Zealand Ltd and the building contractor must be completed by tradespersons with an understanding of cavity construction and fibre cement installation, in accordance with the instructions given within the Titan® & Exotec® Façade Panel Rainscreen Technical Literature, the building designers documentation and this Appraisal.

System Installation

Rigid Air Barrier (RAB)

16.1 RAB sheets may be cut on site by power saw. Holes and cut-outs may be formed by drilling a number of holes around the perimeter of the opening required and tapping out the centre with a hammer, or by using a hole saw.

16.2 RAB sheets must be dry prior to installation. Before the sheets are installed, cut edges and any penetrations in the sheet must be sealed with an acrylic primer.

16.3 At the base of the wall, the RAB sheet must hang minimum 8 mm below the supporting framing. The RAB sheets must be fixed directly to the wall framing at maximum 300 mm centres with 40 x 2.8 mm hot-dip galvanised flat head Hardiflex nails. The nails must not be closer than 12 mm from the edge of the sheet.

16.4 Vertical joints in the RAB must be installed with a 2 mm gap between the sheets over nominal 75 mm wide studs. A minimum 10 mm gap must be left at all horizontal RAB sheet joints. The horizontal gap between the sheets must be flashed with 80 x 1.5 mm Inseal® 3259 Tape, 1.0 mm thick by 80 mm wide Butyl rubber or 0.55 mm thick galvanised steel or aluminium. Joints in the RAB sheets do not need to be in line with joints in the façade panels.

16.5 Penetrations through the air barrier must be sealed against the RAB sheets to ensure the integrity of the air barrier is retained.

Inseal® 3259 Tape

16.6 Prior to the installation of the cavity battens, all vertical joints in the RAB sheets and at internal and external corners must be covered with Inseal® 3259 Tape. The tape is applied directly from the roll leaving the release liner in place to prevent stretching of the tape. The tape is applied directly to the RAB sheet by pressing firmly along the entire tape to obtain maximum benefit of the pressure sensitive adhesive and to ensure a continuous seal. The release liner is removed only when the cavity battens are ready to be installed.

16.7 Inseal® 3259 Tape installed over vertical RAB sheet joints must always be covered by a cavity batten.

Cavity Battens

16.8 Cavity battens must be installed over the RAB sheets to the wall framing. The battens must be fixed in place with 40 x 2.8 mm hot-dip galvanised flat-head Hardiflex nails at maximum 400 mm centres.

16.9 Double battens must be installed behind all vertical Titan® & Exotec® façade panel joints. At horizontal aluminium socket joints, 125 mm long vertical timber packers must be installed at 100 mm centres along the line of the joint to support the aluminium socket.

Inseal® 3109/Butyl Flashing Tape and Cavity Batten Packer

16.10 Before installation of the façade panels, Inseal® 3109/Butyl Tape must be installed behind the vertical panel joints to weatherproof the negative expressed joint. Before fixing in place, the tape must be unrolled, cut to length and allowed to 'relax'. The tape is temporarily fixed in position over the cavity battens by stapling to the battens through the outside edge of the Butyl membrane.

16.11 Cavity batten packers must be fixed to the face of all cavity battens and timber packers that do not have Inseal® 3109/Butyl Tape installed over them.

Aluminium Socket

16.12 The aluminium socket must be adhered to the back face of the façade panel. This should be completed on the ground prior to the panel's installation. The socket is installed with the T-lip positioned against the top edge of the façade panel and is adhered to the panel with two continuous beads of sealant.

Titan® and ExoTec® Façade Panel Installation

16.13 Titan® & Exotec® façade panels may be cut on site by power saw. Holes and cut-outs may be formed by drilling a number of holes around the perimeter of the opening required and tapping out the centre with a hammer, or by using a hole saw.

16.14 Titan® & Exotec® façade panels must be dry prior to installation. Before the panels are installed, cut edges, any damaged pre-primed factory edges and any penetrations in the panel must be sealed with an acrylic primer.

16.15 The bottom row of façade panels must overhang the bottom plate by a minimum of 50 mm. Vertical negative expressed joints are formed over the Inseal® 3109/Butyl Tape by leaving a 10 mm gap between the sheet edges. Horizontal negative expressed joints are formed by leaving a 10 mm gap between horizontal façade panel edges over the aluminium socket.

16.16 Horizontal drained joints are formed by the installation of a Z flashing which bridges the cavity and allows for cavity drainage. A 10 mm gap must be maintained between the top of the Z flashing and the underside of the façade panel above.

16.17 Titan® façade panel fixing must be carried out using 65 x 10g wood screws or 60 x 3.15 mm hot-dip galvanised or stainless steel, ring shank Hardiflex nails. ExoTec® façade panel fixing must be carried out using 65 x 10g wood screws. The fixings must not be closer than 18 mm from the edge of the panel and at vertical panel joints must penetrate through the outer edge of the Inseal® 3109/Butyl Tape beyond the line of the foam seal.

16.18 Nail fixings must be driven flush with the panel surface. Screw fixings must be countersunk 1.5-2.0 mm below the panel surface.

Joinery Installation

16.19 Window and door joinery and associated flashings, air seals etc must be installed by the building contractor in accordance with the building designer's details.

Inspections

16.20 The Technical Literature must be referred to during the inspection of Titan® & Exotec® Façade Panel Rainscreen installations.

Finishing

16.21 Titan® & Exotec® façade panels must be coated within 3 months of fixing.

16.22 Countersunk screw fixings must be filled with an exterior grade epoxy filling compound recommended for use with the selected paint system. The stopping of screw fixings is for aesthetic purposes only. The quality of finish on the Titan® & Exotec® façade panels is dependant on the quality of finishing materials used, and applicator workmanship.

16.23 The paint coating manufacturer's instructions must be followed at all times for application of the paint finish. Titan® & Exotec® façade panels must be clean and dry before commencing painting.

Health and Safety

17.1 Cutting of the RAB sheets and Titan® & Exotec® façade panels must be carried out in well ventilated areas, and a dust mask and eye protection must be worn.

17.2 When power tools are used for cutting, grinding or forming holes, health and safety measures as set out in the Technical Literature must be undertaken because of the amount of dust generated.

17.3 Safe use and handling procedures for the RAB sheets, Titan® & Exotec® façade panels and the components that make up the cladding system are provided in the relevant manufacturer's Technical Literature.

Basis of Appraisal

The following is a summary of the technical investigations carried out:

Tests

18.1 BRANZ expert opinion on NZBC E2 code compliance for Titan® & Exotec® Façade Panel Rainscreen was based on testing and/or evaluation of all details within the scope of this Appraisal. The Titan® & Exotec® Façade Panel Rainscreen system was tested by BRANZ to AS/NZS 4284 with a design wind pressure of 1.1 kPa Serviceability Limit State. The testing was completed in two stages; the first being the static AS/NZS 4284 test, the second being the dynamic AS/NZS 4284 test. The testing assessed the performance of the foundation detail, window head, jamb and sill details, vertical negative expressed joint, horizontal negative expressed joints, horizontal drained joint and internal and external corners. In addition to the weathertightness test, the details contained within the Technical Literature have been reviewed, and an opinion has been given by BRANZ technical experts that the system will meet the performance requirements of the New Zealand Building Code External Moisture Clause E2, when used within the scope of this Appraisal.

18.2 Titan® & Exotec® Façade Panel Rainscreen has been tested by an IANZ accredited laboratory in accordance with AS/NZS 4284 with a design wind pressure of 3.3 kPa Serviceability Limit State. The test methods and results have been reviewed by BRANZ and found to be satisfactory.

18.3 Testing has been carried out by James Hardie Building Products to determine the performance of the Titan® & Exotec® Façade Panel Rainscreen system under negative suction pressure. The test methods and results have been reviewed by BRANZ and found to be satisfactory.

Other Investigations

19.1 Structural and durability opinions have been given by BRANZ technical experts.

19.2 Site visits have been carried out by BRANZ to assess the practicability of installation, and to examine completed installations.

19.3 The Technical Literature for Titan® & Exotec® Rainscreen has been examined by BRANZ and found to be satisfactory.

Quality

20.1 The manufacture of RAB sheets and Titan® façade panels by James Hardie New Zealand Ltd has been examined by BRANZ, and details regarding the quality and composition of the materials used were obtained by BRANZ and found to be satisfactory.

20.2 The manufacture of ExoTec® façade panels by James Hardie Australia Pty Ltd has not been assessed by BRANZ, but details regarding the quality and composition of the materials used were obtained by BRANZ and found to be satisfactory.

20.3 The quality of materials, components and accessories supplied by James Hardie New Zealand Ltd is the responsibility of James Hardie New Zealand Ltd. The quality control system of James Hardie New Zealand Ltd has been assessed and registered as meeting the requirements of ISO 9001: 2008.

20.4 The quality of materials, components and accessories supplied by James Hardie Australia Pty Ltd is the responsibility of James Hardie Australia Pty Ltd. The quality control system of James Hardie Australia Pty Ltd has been assessed and registered as meeting the requirements of ISO 9001: 2008.

20.5 Quality on site is the responsibility of the installer.

20.6 Designers are responsible for the building design, including weathertightness design of penetrations, and building contractors are responsible for the quality of installation of the Titan® & Exotec® Façade Panel Rainscreen components and accessories in accordance with the instructions of James Hardie New Zealand Ltd.

20.7 Building owners are responsible for the maintenance of Titan® & Exotec® Façade Panel Rainscreen in accordance with the instructions of James Hardie New Zealand Ltd.

Sources of Information

- AS/NZS 1170: 2002 Structural design actions.
- AS 3730 Guide to the properties of paints for buildings.
- AS/NZS 2908.2: 2000 Cellulose-cement products - Flat sheet.
- AS/NZS 4284: 1995 Testing of building facades.
- NZS 3602: 2003 Timber and wood-based products for use in building.
- NZS 3604: 2011 Timber-framed buildings.
- NZS 3631: 1988 New Zealand timber grading rules.
- Compliance Document for New Zealand Building Code External Moisture Clause E2, Department of Building and Housing, Third Edition July 2005 (Amendment 5, 1 August 2011).
- Ministry of Business, Innovation and Employment Record of Amendments for Compliance Documents and Handbooks.
- The Building Regulations 1992.

In the opinion of BRANZ, Titan® & Exotec® Façade Panel Rainscreen is **fit for purpose and will comply with the Building Code to the extent specified in this Appraisal provided it is used, designed, installed and maintained as set out in this Appraisal.**

The Appraisal is issued only to the Appraisal Holder, James Hardie New Zealand, and is valid until further notice, subject to the Conditions of Certification.

Conditions of Certification

1. This Appraisal:
a) relates only to the product as described herein;
b) must be read, considered and used in full together with the technical literature;
c) does not address any Legislation, Regulations, Codes or Standards, not specifically named herein;
d) is copyright of BRANZ.
2. The Appraisal Holder:
a) continues to have the product reviewed by BRANZ;
b) shall notify BRANZ of any changes in product specification or quality assurance measures prior to the product being marketed;
c) abides by the BRANZ Appraisals Services Terms and Conditions.
3. The product and the manufacture are maintained at or above the standards, levels and quality assessed and found satisfactory by BRANZ.
4. BRANZ makes no representation as to:
a) the nature of individual examples of, batches of, or individual installations of the product, including methods and workmanship;
b) the presence or absence of any patent or similar rights subsisting in the product or any other product;
c) any guarantee or warranty offered by the Appraisal Holder.
5. Any reference in this Appraisal to any other publication shall be read as a reference to the version of the publication specified in this Appraisal.

For BRANZ

P Robertson
Chief Executive

Date of issue: 5 May 2005

Amendment No. 1, dated 31 January 2012.
This Appraisal has been amended to update clause changes as required by the introduction of NZS 3604: 2011 and NZBC Acceptable Solution E2/AS1 Third Edition, Amendment 5.
Amendment No. 2, dated 30 August 2013.
This Appraisal has been amended to update clause changes as required by the introduction of NZBC Fire Clauses C1 – C6 Protection from Fire and A3 Building Importance Levels and to change the name of the Appraisal Holder.

James Hardie
a smarter way™

Titan®
FACADE PANEL

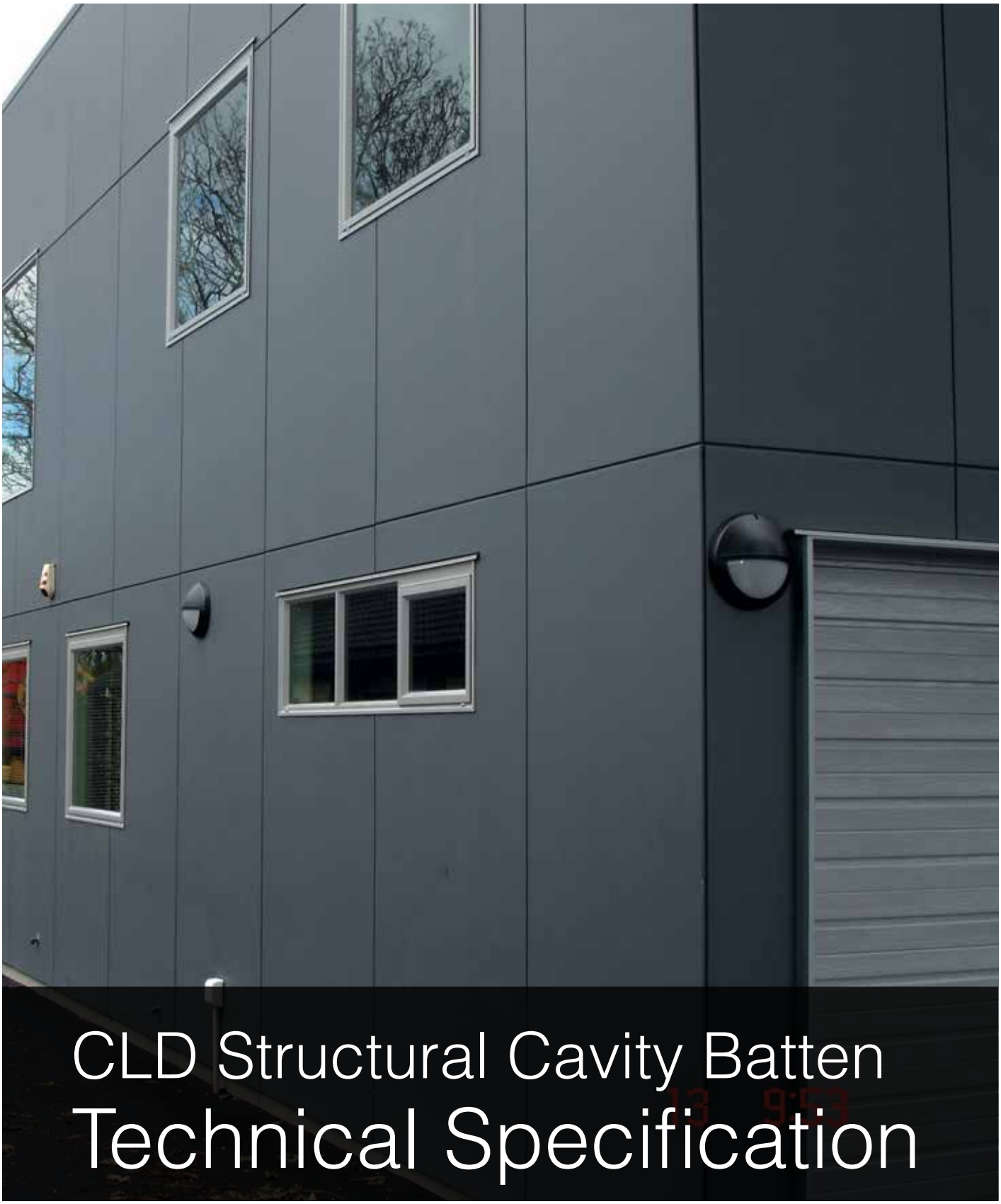

CLD Structural Cavity Batten
Technical Specification

JANUARY 2016 | NEW ZEALAND

Content

1	APPLICATION AND SCOPE	**3**
1.1	Application	3
1.2	Scope	3
1.3	Details	3
2	DESIGN	**3**
2.1	Specific Design	3
2.2	Compliance	3
2.3	Responsibility	3
2.4	Site and Foundation	3
2.5	Surface Clearances	4
2.6	Moisture Management	4
2.7	Structure	4
2.8	Seismic Deflections	4
2.9	Structural Bracing	4
2.10	Fire Rated Walls	4
2.11	Energy Efficiency	4
3	FRAMING	**5**
3.1	General	5
3.2	Timber Framing	5
3.4	Tolerances	5
4	PREPARATION	**5**
4.1	Building Underlay/HomeRAB PreClad Lining	5
4.2	RAB Board	5
4.3	Vent Strip	6
4.4	Flashing	6
4.5	Junctions and Penetrations	6
5	BATTEN INSTALLATION	**6**
5.1	CLD Structural Cavity Batten	6
5.2	Batten Layout	6
5.3	Intermediate Support	6
5.4	Batten Fasteners	6
6	PANEL INSTALLATION	**7**
6.1	General	7
6.2	Titan Façade Panel Installation	7
6.3	Fastener Durability	8
6.4	Adhesive Sealant	8
7	JOINTS	**8**
7.1	Vertical Joint	8
7.2	Horizontal Joint	8
7.3	Horizontal Drainage Joint	8
7.4	External and Internal Corners	8
8	FINISHING	**9**
8.1	Painting	9
8.2	Flexible Sealant	9
8.3	Epoxy Fillers	9
9	STORAGE AND HANDLING	**10**
10	MAINTENANCE	**10**
11	PRODUCT INFORMATION	**10**
11.1	Material	10
11.2	Durability	10
12	SAFE WORKING PRACTICES	**11**
13	PRODUCT AND ACCESSORIES	**12**
14	DETAILS	**14**
	PRODUCT WARRANTY	**35**

WE VALUE YOUR FEEDBACK

To continue with the development of our products and systems, we value your input. Please send any suggestions, including your name, contact details, and relevant sketches to:

Ask James Hardie™
Fax 0800 808 988
literaturefeedback@jameshardie.co.nz

THIS TECHNICAL SPECIFICATION IS FOR TITAN® FAÇADE PANEL FIXED TO CLD® STRUCTURAL CAVITY BATTEN.

1 Application and scope

1.1 APPLICATION

The Titan® Façade Panel installed as per this specification provides a durable, expressed joint panel appearance for residential / commercial building façades. Titan Façade Panel cladding can be fixed over either timber frame or lightweight construction steel-framed walls. A wide range of colours can be used over Titan Façade Panels.

Specifier

If you are a specificer or other responsible party for a project ensure that the information in this document is appropriate for the application you are planning and that you undertake specific design and detailing for areas which fall outside the scope of these specifications.

Installer

If you are an installer ensure that you follow the design, moisture management principles, associated details and material selection provided by the designer. All the details provided in this document must be read in conjunction with the specifier's specification.

Make sure your information is up to date

When specifying or installing James Hardie products, ensure you have the current manual. If you're not sure you do, or you need more information, visit www.jameshardie.co.nz or Ask James Hardie™ on 0800 808 868.

1.2 SCOPE

This specification covers the use of Titan Façade Panel on buildings, where the maximum wind pressure exerted on the building façade is up to 2.5kPa (ULS).

This specification is intended for use by architects or designers / specifier and installers who may be involved with the specification of Titan Façade Panel, CLD® Structural Cavity Battens and their installation. The specification must be read in conjunction with the figures provided at the rear of this document and project specific drawing / specifications.

NOTE:

For installing Titan Façade Panel using timber cavity battens, refer to Titan Façade Panel/ ExoTec Façade Panel Rainscreen technical specification available for download at www.jameshardie.co.nz

1.3 DETAILS

Various typical Titan Façade Panel construction details are provided in the Details section of this document. All dimensions shown are in millimetres unless noted otherwise. These details are also available in CAD file format and can be downloaded from our website at www.jameshardie.co.nz.

2 Design

2.1 SPECIFIC DESIGN

For the use of Titan Façade Panel and CLD Structural Cavity battens outside the scope of this specification, the designer, architect or engineer must ensure that the relevant clauses of the New Zealand Building Code (NZBC) have been considered and the intent of their design meets the requirements of the NZBC. Project specific details are required to be developed if they are not covered in this literature.

2.2 COMPLIANCE

Titan Façade Panel and CLD Structural Cavity Battens installed as per this technical specification have been tested in a NATA accredited testing laboratory and complies with the requirements of Structure–B1, Durability-B2 and External Moisture-E2 Clauses of NZBC.

2.3 RESPONSIBILITY

The specifier or the other party responsible for the project is responsible for ensuring that the information and details included in this technical specification are suitable for the intended application.

The specifier shall accommodate the appropriate provisions required by the NZBC. Careful detailing of all penetrations through the building underlay/rigid air barrier is required and must be appropriately flashed and weatherproofed. The other materials and components that are used to manage moisture must be installed as per their manufacturers' instructions and comply with the requirements of the relevant standards and the NZBC.

The designer / specifier must ensure that all the reference documents and standards referred to in this document or during the design and construction process are current editions and are complied with. The designer must identify the moisture related risks associated with the particular building design. The design and construction must effectively manage the external moisture.

For the latest information in relation to designing for weathertightness refer to www.branz.co.nz and www.dbh.govt.nz websites.

James Hardie conducts stringent quality checks to ensure that any product manufactured falls within our quality spectrum. It is the responsibility of the builder to ensure that the product meets aesthetic requirements before installation. James Hardie will not be responsible for rectifying obvious aesthetic surface variations following installation.

2.4 SITE AND FOUNDATION

The site on which the building is situated must comply with E1- 'Surface Water' Clause of the NZBC. The grade of adjacent finished ground must slope away from the building to avoid any possibility of water accumulation as per the NZBC requirements.

For SED 'Specific Engineering Design' projects the foundation must be designed and certified by a qualified structural engineer and comply with all relevant codes, regulations and standards.

2.5 SURFACE CLEARANCES

The clearance between the bottom edge of cladding and paved/unpaved ground must comply with section 9.1.3 of 'E2 /AS1'. The finished floor level must also comply with these requirements. These clearances must be maintained throughout the life of the building.

Titan Façade Panels must overhang the bottom plate on a concrete slab by a minimum of 50mm.

Titan Façade Panel must always maintain a clearance of 100mm from paved grounds and 175mm from unpaved grounds. On roofs and decks etc. a minimum clearance of 50mm must be maintained.

Do not install Titan Façade Panels such that it may remain in contact with standing water.

2.6 MOISTURE MANAGEMENT

It is the responsibility of the specifier to identify moisture related risks associated with any particular building design. Wall construction design must effectively manage moisture, considering both the interior and exterior environment of buildings, particularly in buildings that have a higher risk of wind driven rain penetration or that are artificially heated or cooled. Walls must include those provisions as required by the NZBC Acceptable Solution 'E2/AS1-External Moisture'. In addition, all wall openings, penetrations, junctions, connections, windowsills, heads and jambs must incorporate appropriate flashings for waterproofing. The other materials, components and installation methods used to manage moisture in external walls, must comply with requirements of NZBC and any other regulations or standards applicable. For further guidance on designing for weathertightness refer to BRANZ Ltd. and the Department of Building and Housing (DBH) updates on the following websites respectively, www.branz.co.nz and www.dbh.govt.nz.

In addition, the following points must be considered:

- Flexible sealant in vertical panel joints must be applied as detailed in this technical specification.
- For projects within the scope of E2/AS1 where the walls are higher than two storeys, it is necessary to provide a horizontal flashing joint after two floors to drain the cavity.
- The installation of smoke chimneys, pipe penetrations and other fixtures etc. must not restrict the free flow of moisture to the exterior.

2.7 STRUCTURE

2.7.1 Timber Framing

For residential buildings the timber-framing must be provided in accordance with NZS 3604 (Timber-framed Buildings). When the framing is provided as per the specific engineering design, the framing stiffness must be equivalent to, or more, than the minimum stiffness requirements of NZS 3604.

For specific engineering design frame design, refer to NZS 3603 and AS/NZS 1170 for framing design.

For timber frame walls longer than 12m, it is best practice to allow for construction joints to accommodate movements generated due to timber shrinkage or deflection etc.

2.7.2 Steel Framing

Steel-framed buildings is outside the scope of this specification. Refer to James Hardie for information on steel frame construction.

2.7.3 Wind Loading

Titan Façade Panel cladding installed as per this technical specification is suitable for use up to maximum wind pressures of 2.5kPa (ULS).

2.8 SEISMIC DEFLECTIONS

Titan Façade Panel installed in accordance with this technical specification is capable of withstanding deflections of the support structure (for example seismic drift) up to a magnitude of span/250 or maximum of 15mm, as determined at the Serviceability Limit State (SLS).

2.9 STRUCTURAL BRACING

Titan Façade Panels installed as per this specification has not been tested and therefore cannot be used to achieve structural bracing. However, bracing can be achieved by using RAB Board fixed direct to the framing or by using internal linings such as Villaboard® Lining or plasterboard.

2.10 FIRE RATED WALLS

A fire rating of up to 60 minutes can be achieved when using a RAB Board in lieu of a building underlay and installing Titan Façade Panels as per this specification. Ask James Hardie on 0800 808 868 for further information.

2.11 ENERGY EFFICIENCY

External walls constructed using James Hardie Titan Façade Panel, bulk insulation, where the area of glazing is 30% or less of the total wall area and constructed as per this technical specification complies with the requirements for walls in NZBC Acceptable Solution H1/AS1 (NZBC Clause H1 Energy Efficiency), Replacement Table 1. To meet thermal insulation requirements for the construction, the bulk insulation as specified in Table 1 must be used. This insulation may be substituted with insulations having higher R-values. The thermal insulation of a wall gets affected when the depth of the timber framing is increased or decreased. The calculation used in Table 1 is based on a timber framing size 90 x 45mm and using an internal lining material such as James Hardie Villaboard Lining or a 10mm plasterboard.

Table 1

Insulation capability		
Climate zone	**Construction R-value requirement**	**Minimum R-value of insulation required**
1 and 2	1.9 m2 ºC/W	#R2.0
3	2.0 m2 ºC/W	#R2.2
Total construction R-Value depends on the insulation material used and the framing ratio. The insulation material R-Values specified in this table are for studs spaced at 600mm c/c and nogs spaced at 800mm c/c. # To achieve higher R-Values of construction the wall insulation must be replaced with an insulation material having higher R-Values to suit the requirements. For further guidance on insulation requirement refer to current edition of 'House Insulation Guide' published by BRANZ.		

3 Framing

3.1 GENERAL

Titan Façade Panels can be installed to timber-framed or steel-framed structures. Fixing to any other framing material is subject to a specific engineering design.

- Stud spacing must not exceed 600mm c/c.
- Nog / dwang spacing must not exceed 800mm c/c when studs are at 600mm c/c.

NOTE: Titan Façade Panel fastener spacings are provided in Section 6.

3.2 TIMBER FRAMING

3.2.1 Dimensions

A minimum 45mm stud width is required.

3.2.2 Structural Grade

Minimum structural grade of timber framing to be used must be in accordance with those specified in NZS 3604.

3.2.3 Durability

The external framing must be treated to minimum H1.2 treatment. Higher treatment levels may be used but check for the compatibility of treatment chemicals with other materials. Refer to NZBC Acceptable Solution B2/AS1 'Durability' for further information about the durability requirements.

For timber treatment and allowable moisture content information refer to NZS 3602 (Timber and Wood-Based Products for use in Buildings) and NZS 3640 (Chemical Preservation of Round Sawn Timber) for minimum timber treatment selection and treatment requirements. Also refer to framing manufacturer's literature for further guidance on timber selection. Framing must be protected from moisture at site in accordance with the recommendations of the framing manufacturers.

NOTE: Refer to NZS 3602 for information about the allowable moisture content in timber framing.

3.2.4 Frame Construction

The framing must be rigid and not rely on the cladding panel for stability.

All timber framing sizes and set-out must comply with NZS 3604 or specific engineering design requirements and as specified in this specification.

In case of gable end trusses sitting on top plates of the external wall frame, the frame size must be in accordance with truss design and specification supplied by the frame and truss manufacturer/supplier supported by independent design producer statement.

Note: It is recommended that the CLD Structural Cavity Battens be installed prior to plumbing, electrical and other services within the frame. This will prevent these services from being damaged by fasteners used to install the battens.

3.3 TOLERANCES

In order to achieve the required performance and an acceptable wall finish, it is imperative that framing is straight and true. Framing tolerances must comply with the relevant codes, manufacturer's specifications and design requirements. All framing shall be made flush.

4 Preparation

4.1 FLEXIBLE UNDERLAY/HOMERAB PRE-CLADDING

Flexible underlay or HomeRAB Pre-Cladding must be provided as per the requirements of the NZBC Acceptable Solution E2/AS1 'External Moisture' and NZS 3604. The flexible underlay must comply with Table 23 of E2/AS1 and AS/NZS 4200.1. The flexible underlay must be fixed in accordance with E2/AS1, NZS 3604 and AS/NZS 4200.2 'Pliable Building Membranes and Underlay – Installation' standard and the underlay manufacturer's recommendations.

Walls which are not lined on the inside face (e.g. garage walls or gable ends) must include a rigid sheathing or an air barrier behind the cladding which complies with the requirements of the NZBC Acceptable Solution E2/AS1 Table 23. For attached garages, wall underlays must be selected in accordance with the NZBC Acceptable Solution E2/AS1, Paragraph 9.1.3.4. HomeRAB Pre-Cladding is suitable for use in these applications. It must be installed in accordance with James Hardie Rigid Air Barriers installation manual.

4.2 RAB BOARD

General flexible underlay or HomeRAB Pre-Cladding is suitable for use up to very high wind speed zone (50m/sec).

When an EH windzone or for specific design projects where the wind pressure is higher than 1.5kPa, James Hardie RAB Board must be used instead of flexible underlay.

To achieve the temporary weathertightness using James Hardie rigid air barriers, windows/doors need to be temporarily installed.

Refer to James Hardie Rigid Air Barriers installation manual for information regarding its installation.

4.3 VENT STRIP

The James Hardie uPVC cavity vent strip must be installed at the bottom of all walls constructed using the drained and ventilated cavity construction method. It is important that the openings in the vent strip are kept clear of obstructions to allow free drainage and ventilation of cavities. James Hardie uPVC vent strip has an opening area of 1000mm^2/m length. Refer to Figure 4.

4.4 FLASHING

All wall openings, penetrations, intersections, connections, window sills, heads and jambs must be flashed prior to panel installation. Please refer to moisture management requirements in Clause 2.6. The flexible underlay or James Haride rigid air barrier must be appropriately taped around the penetrations and lapped/taped to flashings. Materials must be lapped in such a way that water tracks down to the exterior of a building. The selected flashing materials must comply with the durability requirements of the NZBC. For information refer to Table 20 of clause E2 of the NZBC.

When using James Hardie rigid air barriers, the entire framing around window opening must be protected with a flashing tape. The tape must be finished over the face of James Hardie rigid air barriers. The flashing tapes like Protecto® tape by Protecto wrap or Aluband® by Thermakraft are recommended for use with James Hardie rigid air barriers. Refer to tape manufacturer's literature for further information regarding their installation.

4.5 JUNCTIONS AND PENETRATIONS

Refer to Clause 2.5 of this specification for moisture management requirements. All windows and doors must be detailed as per the requirements of this specification. James Hardie has developed the window details for Titan Façade Panel which meet the performance requirements of E2 'External Moisture', an approved document of the NZBC. Refer to Figures 17 to 19.

5 Batten installation

5.1 CLD STRUCTURAL CAVITY BATTEN

The CLD Structural Cavity Batten is suitable to have Titan Façade Panel fixed into them. The battens are 2450mm long, 70mm wide and 19mm thick. The battens are fully sealed on all faces. Refer to the details for information about installation.

NOTE: For installing Titan Façade Panel using timber cavity battens, refer to Titan Façade Panel/ExoTec Façade Panel Rainscreen technical specification available for download at www.jameshardie.co.nz

5.2 BATTEN LAYOUT

CLD Structural Cavity Battens must be fixed to the wall framing over building underlay or James Hardie rigid air barriers. The smoother face of batten should face towards the cladding.

CLD Structural Cavity Battens are suitable to withstand wind pressures up to 2.5kPa (ULS). For batten fixing, refer to section 5.4. Ensure the battens are straight and provide a flat surface to fix Titan Façade Panel to. Site cut ends of battens must be sealed on site with Dulux® Acraprime 501/1 sealer or Resene Quick Dry.

The battens are run continuously over the studs but they must not be run continuously over the floor joists. There must be a 15mm gap between the battens at floor joist level to allow for structural shrinkages and deflections. Refer to Figure 22.

CLD Structural Cavity Battens can be butt jointed over the studs within the floor height. The batten ends must be cut between 20º to 45º and be installed in a way that the butt joint deflects the moisture to the exterior. The ends must be sealed and jointed with the adhesive sealant before butting them together. Refer to Figure 16.

The designer must ensure that the CLD Structural Cavity Battens are not used in situations where design wind pressures are above 2.5kPa (ULS).

CLD Structural Cavity Battens must not be used to a length smaller than 300mm.

At corners install over polypropylene tape refer to Figures 13 and 14.

5.3 INTERMEDIATE SUPPORT

A nylon strap or galvanised wire must be at 300mm centres fixed horizontally and drawn taut to restrain the insulation from bulging into the cavity, where the studs are spaced at 600mm centres. When RAB Board is used or the studs are spaced at maximum 400mm centres, no intermediate support is required.

5.4 BATTEN FASTENERS

The CLD Structural Cavity Batten must be fixed to the framing as specified in Table 2. The fasteners must be driven at a minimum distance of 50mm from the batten ends.

Table 2

Batten fixing				
Fixing Type	**Framing**	**Design wind pressure kPa (ULS)**	**Batten centres max. (mm)**	**Fixings centres max. (mm)**
65mm x 2.8mm RounDrive ring shank nail hot dip galv./ s.steel	Timber	Up to 1.5 (Up to and including VH wind zone)	600	250
		Up to 2.5 (>VH wind zone)	400	200
50mm x 9-10g Countersunk head steel screw class 3/4	*Steel 0.55 to1.6mm BMT	Up to 1.5 (Up to and including VH wind zone)	600	250
		Up to 2.5 (> VH wind zone)	400	200

*When fixing CLD Structural Cavity Batten over steel frame, provide a 10mm thick HDP batten under the underlay or RAB Board to achieve thermal break.

*Ensure a minimum 15mm penetration of screw into steel frame.

For fastener durability information, refer to Clause 6.3 of this document.

CLD Structural Cavity Battens less than 400mm in length must have fixings at maximum 150mm centres.

6 Panel installation

6.1 GENERAL

Titan Façade Panel and CLD Structural Cavity Battens must be kept under cover whilst in storage or at sites and they must be dry at the time of their installation. All site cut panel edges must be sealed with Dulux Acraprime 501/1, Resene Quick Dry or similar sealer compatible with the finish coat before installation. It is recommended to fix from the centre of the panel and work outwards. The straightness of timber framing is essential to achieve the flatness on panel surface. Ensure that panels are hard against the battens to avoid drumminess.

When Titan Façade Panel is to be cut in sizes smaller than 1200 x 1190mm, or where the Titan Façade Panel is cut to narrower widths eg 600mm or 400mm and fixed horizontally, the CLD Structural Cavity Batten must be installed at 400mm maximum centres.

Apply a continuous 6mm thick bead of Bostik 'Seal N Flex -1' or Sika 'Sikaflex-11FC' adhesive sealant to the face of CLD Structural Cavity Batten to adhere the Titan Façade Panel to it. Titan Façade Panel must be pushed hard against the CLD Structural Cavity Batten when fixing.

Always consider panel layout carefully to minimise site wastage. It is best practise to panelise around the window/door openings by aligning the negative joint with jambs or window/door heads/ sills. Refer Figure 3.

6.2 TITAN FAÇADE PANEL INSTALLATION

The Titan Façade Panels are fixed to CLD Structural Cavity Battens using one of the following fixings specified in Table 3:

Table 3

Titan Façade Panel fixing		
Types of fixings to be used with adhesive sealants	**Suitable up to design wind pressure kPa (ULS)**	**Fixing to cld structural cavity battens c/c (mm)**
C-25 'T'- Head stainless steel brad nail	1.5 (Up to and including VH wind zone)	150
25 x 2.5mm annular threaded fibre cement nail	2.5 (> VH wind zone)	200
25mm x 8-15g OR Pan / Wafer head exposed screw class 3/4	2.5 (> VH wind zone)	200
25mm x 10g counter sunk screw class 3/4 or stainless steel	2.5 (> VH wind zone)	200

6.2.1 T-Head Brad Nails

A combination of stainless steel straight T-head brad nail and Bostik 'Seal N Flex -1' or Sika 'Sikaflex-11FC' adhesive sealant provides a fast and efficient method of panel installation. It also minimises the preparation required before painting the panels. T-head brad nails are fired using the brad nail guns.

This fixing method is only suitable for projects within the scope of NZS 3604.

Apply a 6mm thick continuous bead of Bostik 'Seal N Flex-1' or Sika 'Sikaflex-11FC' adhesive sealant to the face of CLD Structural Cavity Batten first then fix the panel with T-head brad nails securing the panel in place while the adhesive cures. A good practice is to set the brad nail gun to fire nails 2-3mm proud of the panel surface keeping a consistent pressure on the panel while fixing. Let the adhesive go off for approximately 1-2 hours whilst continuing work on the next section. Come back later and hammer the nails flush with panel surface. Use Paslode C-25 304 stainless steel brad nails.

The edge distance required for fixing T-head brad nails is 12mm. Refer to Figure 6.

NOTE: Do not use this fixing method in specific engineering design (SED) wind zones.

6.2.2 Fibre Cement Nails

Titan Façade Panel can be installed using a 25mm x 2.5mm annular threaded fibre cement nail. These nails must be driven flush with the panel surface. Apply a 6mm thick continuous bead of Bostik 'Seal N Flex-1' or Sika 'Sikaflex-11FC' adhesive sealant over the CLD Structural Cavity Batten before fixing Titan Façade Panels. Refer to section 6.3 for the durability requirements.

Always ensure that the fibre cement nails are finished flush prior to finishing. Refer to section 8.

The edge distance required for fixing fibre cement nails is 12mm. Refer to Figure 7.

6.2.3 Countersunk Screws

Titan Façade Panels must be pre-drilled on the ground before installation using a JH counter sunk drill bit. A 25mm x 10g countersunk screw is suitable for this installation method. The screw head must be countersunk to a depth of 2mm maximum below the Titan Façade Panel surface. Apply a 6mm thick continuous bead of Bostik 'Seal N Flex-1' or Sika 'Sikaflex-11FC' adhesive sealant over the CLD Structural Cavity Batten before fixing the Titan Façade Panels.

The typical edge distance required for screw fixing is 18mm. Refer to Figure 9.

The torque setting of the drill used to fix screws must be set to a low torque level to ensure the screw is not over driven in CLD Structural Cavity Batten. The screws must be manually tightened prior to epoxy filling.

The counter sunk screw holes are flush finished with two part epoxy filler. Allow epoxy to cure, sand the epoxy to a smooth finish with 60-80 grit sandpaper then prime over. Ensure the epoxy manufacturer's recommendations are followed.

6.2.4 Exposed Head Screws

Exposed head screws, e.g. pan, wafer and hex head fasteners may be colour coated to match the panel finish. Use a 25mm x 8-15g screw.

Titan Façade Panels must be pre-drilled with a masonry drill bit. Apply a 6mm thick continuous bead of Bostik 'Seal N Flex-1' or Sika 'Sikaflex-11FC' adhesive sealant over the CLD Structural Cavity Batten before fixing the Titan Façade Panel over it. Titan Façade Panel must be pushed hard against the CLD Structural Cavity Batten when fixing.

The edge distance required for fixing screws is 18mm.

A nylon washer must be used under the exposed screw heads for sealing against the Titan Façade Panel surface. Refer to Figure 11.

6.3 FASTENER DURABILITY

Fasteners must comply with the minimum durability requirements of the NZBC. The NZS 3604 specifies the requirements for fixing materials to be used in relation to exposure zones and are summarised in Table 4.

Fasteners must be fully compatible with other materials they are to be in contact with, to ensure the durability of complete assembly.

For steel framing ensure that the fasteners used are compatible with steel framing.

Contact fastener manufacturers for more information.

Table 4

Exposure conditions and nail selection prescribed by NZS 3604		
Nail material		
Zones D	Zone C outside sea spray zone, Zone B and Geothermal hot spots	Bracing — All Zones
Grade 316 Stainless	Hot-dipped galvanised or Grade 316 stainless	Grade 316 Stainless

*(Zone C areas where local knowledge dictates that increased durability is required, appropriate selection shall be made)

Microclimate conditions as detailed in NZS 3604, paragraph 4.2.4 require SED.

Also refer to the NZBC Acceptable Solution 'E2/AS1' Table 20 and 22 for information regarding the selection of suitable fixing materials and their compatibility with other materials.

6.4 ADHESIVE SEALANT

A polyurethane adhesive sealant 'Seal 'N' Flex-1' manufactured by Bostik or 'Sikaflex-11FC' by Sika have been tested and must be used as per this specification. Apply a 6mm continuous bead of this adhesive sealant over the face of CLD Structural Cavity Batten before fixing Titan Façade Panel.

NOTE: Do not use excessive adhesive sealant.

7 Joints

Titan Façade Panels are fixed keeping a 10mm nominal gap between panels at vertical and horizontal joints.

7.1 VERTICAL JOINT

CLD Structural Cavity Batten is fixed over the studs and a vertical joint is formed over the batten. A 10mm gap is required between the panels to form a vertical expressed joint. After the installation of panels to CLD Structural Cavity Battens, the joints must be sealed with a flexible sealant. Refer to Figure 6, 8, 10 and 12.

When Titan Façade Panel laid horizontally, ensure correct length of panel so vertical joint is centred over the CLD Structural Cavity Batten.

7.2 HORIZONTAL JOINT

Aluminium 'T' socket or a Z flashing is used to form a horizontal joint between the panels.

When using a 'T' socket, it is cut to suit the exact width of each panel. Two 6mm thick continuous beads of adhesive sealant are run over the bottom (short) portion of 'T' socket and the socket is glued to the lower panel. Refer to Figure 21. The 'T' lip sits over the top edge of lower Titan Façade Panel.

When a horizontal joint using a 'T' socket is formed at the floor joist level, a cavity batten flashing is required at the CLD Structural Cavity Batten joint. Refer to Figure 22.

At internal and external corners a CLD Structural Cavity Batten corner flashing is used. Refer to Figure 23.

At every floor a horizontal joint flashing is required.

7.3 HORIZONTAL DRAINAGE JOINT

The wall cavities must be drained every two floors to facilitate moisture drainage and ventilation. Refer Figure 24.

7.4 EXTERNAL AND INTERNAL CORNERS

Two CLD Structural Cavity Battens are fixed in the corners to facilitate the fixing of Titan Façade Panel to battens on each side. Ensure 200mm minimum wide polypropylene or flashing tape is applied to building paper over timber framing prior to CLD Structural Cavity Battens installation. Refer to Figure 13 and 14.

A 10mm gap is required between the Titan Façade Panels to form a vertical expressed joint at corners. Ensure the correct batten panel orientation for panel installation and a continuous bead of adhesive sealant is applied between CLD Structural Cavity Battens. Refer to Figure 13 and 14.

Alternatively, an aluminimum box corner can be used. Refer to Figure 15.

8 Finishing

8.1 PAINTING

Painting of Titan Façade Panel is mandatory to meet the durability requirements of NZBC and 15 year James Hardie product warranties. Titan Façade Panels must be dry and free of any dust or grime before painting. The panels must be painted within 90 days of their installation. There is no restriction on the LRV of paint to be applied on the Titan Façade Panel.

Titan Façade Panels are pre-primed and are suitable for site applied acrylic paints. Pre-finished panels can also be installed using exposed head fasteners.

In order to seal cut edges or sanded patches, Dulux AcraPrime 501/1 acrylic primer or a similar product should be applied. The primer should be compatible with the paint to be used.

Where panels are fixed with brad nails, the nail heads must be finished flush with panel surface. The nail heads can be skimmed over with an exterior grade 2 part builders fill, if required. The skimmed area must be primed prior to site-applied finishing.

For site-applied finishes where brad nails or exposed head screws are used, James Hardie recommends a minimum of two coats of high build acrylic paint. Follow the paint manufacturer's recommendations to prepare the surface and to adequately cover and conceal the panel fixings.

For site-applied finishes when countersunk screws used, the recommendation is one coat of acrylic primer and two coats of high build acrylic paint (total DFT not less than 150 microns).

8.2 FLEXIBLE SEALANT

Sealant used must comply with the relevant requirements of the NZBC. Their application and usage must be in accordance with the manufacturer's instructions. Check with the sealant manufacturer prior to coating over sealant. Some sealant manufacturers do not recommend coating over their product.

8.3 EPOXY FILLERS

All countersunk screw holes must be filled with a two part epoxy e.g. Nuplex Fairing Cream or a similar epoxy filler. The screw and screw holes must be clean and dry before they are filled with epoxy. The epoxy filler must be sanded flush with panel surface. Always refer to the epoxy manufacturer recommendation before use.

9 Storage and handling

Titan Façade Panel, CLD Structural Cavity Batten and RAB Board must be laid flat on a smooth level surface. Edges and corners must be protected from chipping. To ensure optimum performance, store panels under cover and keep dry prior to fixing. If the sheets become wet, allow them to dry thoroughly before fixing. Do not carry sheets or CLD Structural Cavity Battens on the flat, carry in the vertical position to avoid excessive bending.

10 Maintenance

The extent and nature of maintenance required will depend on the geographical location and exposure of the building. It is the responsibility of the specifier to determine normal maintenance requirements to maintain the effectiveness of the cladding. As a guide, it is recommended that the basic normal maintenance tasks shall include, but not be limited to:

- Washing down exterior surfaces every 6-12 months*
- Re-coating exterior protective finishes**
- Regular inspection and repair if necessary of the sealants, Inseal® strips and fillers etc.
- Cleaning out gutters, down pipes and overflow pipes as required
- Pruning back vegetation which is close to or touching the cladding as well as ensuring the NZBC ground clearance requirements are maintained especially where gardens are created.
- The clearance between the bottom edge of the Titan Façade Panel cladding and the finished/unfinished ground must always be maintained.
- Refilling the countersunk holes where the cracks start appearing in the paint film around epoxy fillers or where fastener read through becomes significant.

*Do not use a water blaster to wash down the cladding.

**Refer to the paint manufacturer for washing down and recoating requirements related to ongoing paint performance.

11 Product information

11.1 MATERIAL

Titan Façade Panel and RAB Board are high quality autoclaved medium density fibre cement products manufactured by James Hardie. The basic composition is Portland cement, ground sand, cellulose fibre and water. The products are easily identified by the name Titan or RAB written on the rear face. Titan Façade Panel is sealed and primed on the face and back in clear sealed. RAB Board is face sealed.

CLD Structural Cavity Battens are manufactured using a low density fibre cement formulation. The basic composition is Portland cement, ground sand, cellulose fibre, water and proprietary additives. The battens are factory sealed on all sides.

Titan Façade Panels, RAB Board and CLD Structural Cavity Battens are manufactured to AS/NZS 2908.2 'Cellulose-Cement Products' Part 2 (ISO 8336 'Fibre-Cement Flat Sheet'). James Hardie New Zealand is an ISO 9001 'Telarc' certified manufacturer. Titan Façade Panel and RAB Board and CLD Structural Cavity Battens are classified Type A, Category 3 in accordance with AS/NZS 2908.2 'Cellulose-Cement Products' standard.

The approximate mass of 9mm Titan Façade Panel is 13kg/m^2. For panel sizes see Table 6.

11.2 DURABILITY

Titan Façade Panel, RAB Board and CLD Structural Cavity Batten installed and maintained as per this technical specification will meet the durability requirement for claddings as per 'B2 – Durability' clause of NZBC.

11.2.1 Resistance to Moisture/Rotting

Titan Façade Panel, RAB Board and CLD Structural Cavity Batten has demonstrated resistance to permanent moisture induced deterioration (rotting) and has passed the following tests in accordance with AS/NZS 2908.2:

- Water Permeability (Clause 8.2.2)
- Warm Water (Clause 8.2.4)
- Heat Rain (Clause 6.5)
- Soak Dry (Clause 8.2.5)

11.2.2 Control of External Fire Spread

Titan Facade Panel meets the requirements of Appendix C C7.1.1 and is classified as 'Non-Combustible Material' which is suitable for use as external wall cladding and complies with the requirements of Paragraph 5.4 of the NZBC Acceptable Solution C/AS1 and Paragraph 5.8.1 of Acceptable Solutions C/AS2 to C/AS6 of the NZBC.

11.2.3 Alpine Regions

In regions subject to freeze/thaw conditions, Titan Façade Panel, RAB Board and CLD Structural Cavity Battens must not be in direct contact with snow and/or ice build up for extended periods, e.g. external walls in alpine regions be cleared from snowdrifts over winter. These products have been tested for resistance to frost in accordance with AS/NZS 2908.2 Clause 8.2.3.

12 Safe working practices

WARNING — DO NOT BREATHE DUST AND CUT ONLY IN WELL VENTILATED AREA

James Hardie products contain sand, a source of respirable crystalline silica which is considered by some international authorities to be a cause of cancer from some occupational sources. Breathing excessive amounts of respirable silica dust can also cause a disabling and potentially fatal lung disease called silicosis, and has been linked with other diseases. Some studies suggest smoking may increase these risks. During installation or handling: (1) work in outdoor areas with ample ventilation; (2) minimise dust when cutting by using either 'Score and Snap' knife, fibre cement shears or, where not feasible, use a HardieBlade™ Saw Blade and dust-reducing circular saw attached to a HEPA vacuum; (3) warn others in the immediate area to avoid breathing dust; (4) wear a properly-fitted, approved dust mask or respirator (e.g. P1 or P2) in accordance with applicable government regulations and manufacturer instructions to further limit respirable silica exposures. During clean-up, use HEPA vacuums or wet cleanup methods — never dry sweep. For further information, refer to our installation instructions and Safety Data Sheets available at www.jameshardie.co.nz

FAILURE TO ADHERE TO OUR WARNINGS, SAFETY DATA SHEETS, AND INSTALLATION INSTRUCTIONS MAY LEAD TO SERIOUS PERSONAL INJURY OR DEATH.

James Hardie recommended safe working practices
CUTTING OUTDOORS
1. Position cutting station so that wind will blow dust away from user or others in working area. 2. Use a dust reducing circular saw equipped with HardieBlade™ Saw Blade and HEPA vacuum extraction **BEST** • Dust reducing circular saw equipped with HardieBlade™ Saw Blade and HEPA vacuum extraction. **GOOD** • Dust reducing circular saw with HardieBlade™ Saw Blade.
SANDING/DRILLING/OTHER MACHINING
When sanding, drilling or machining you should always wear a P1 or P2 dust mask and warn others in the immediate area.
IMPORTANT NOTES:
1. For maximum protection (lowest respirable dust production), James Hardie recommends always using "Best" — level cutting methods where feasible. 2. NEVER use a power saw indoors 3. NEVER use a circular saw blade that does not carry the HardieBlade™ logo 4. NEVER dry sweep – Use wet suppression or HEPA Vacuum 5. NEVER use grinders 6. ALWAYS follow tool manufacturer's safety recommendations
P1 or P2 respirators can be used in conjunction with above cutting practices to further reduce dust exposures. Additional exposure information is available at www.jameshardie.co.nz to help you determine the most appropriate cutting method for your job requirements. If concern still exists about exposure levels or you do not comply with the above practices, you should always consult a qualified industrial hygienist or contact James Hardie for further information.

Working Instructions

Refer to recommended Safe Working Practices before starting any cutting or machining of product.

HardieBlade™ Saw Blade

The HardieBlade™ Saw Blade used with a dust-reducing saw fitted with HEPA vacuum filter is ideal for fast, clean cutting of James Hardie fibre cement products. A dust-reducing saw uses a dust deflector or a dust collector connected to a vacuum system. When sawing, clamp a straight-edge to the sheet as a guide and run the saw base plate along the straight edge when making the cut.

Hole-Forming

For smooth clean cut circular holes:

- Mark the centre of the hole on the sheet.
- Pre-drill a 'pilot' hole.
- Using the pilot hole as a guide, cut the hole to the appropriate diameter with a hole saw fitted to a heavy duty electric drill.

For irregular holes:

- Small rectangular or circular holes can be cut by drilling a series of small holes around the perimeter of the hole then tapping out the waste piece from the sheet face.
- Tap carefully to avoid damage to sheets, ensuring that the sheet edges are properly supported.

Handling and Storage

All materials should be stored to avoid damage, with edges and corners of the panels protected from chipping.

Panels must be protected from rain during transport and storage. Panels must be laid flat undercover on a smooth level surface clear of the ground to avoid exposure to water or moisture etc. Titan Façade Panel, RAB Board and CLD Structural Cavity Batten are resistant to permanent water damage when installed as directed, and must only be installed in a dry state.

When handling Titan Façade Panels, carry panels on the edge taking care not to chip edges and corners.

Quality

James Hardie conducts stringent quality checks to ensure that any product manufactured falls within our quality spectrum. It is the responsibility of the builder to ensure that the product meets aesthetic requirements before installation. James Hardie will not be responsible for rectifying obvious aesthetic surface variations following installation.

13 Product and accessories

Table 6

Titan Façade Panel information					
Product	Description	Size			Code
		Thickness (mm)	Length (mm)	Width (mm)	
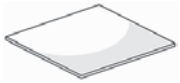	**Titan Façade Panel** A square edge panel for expressed jointed building façades. Titan Façade Panel is primed with a distinctive primer, which accepts a wide range of paint finishes. The panel must be installed with the primed side facing outwards.	9 9 9	2400 2700 3000	1190 1190 1190	**403023** **403022** **403021**
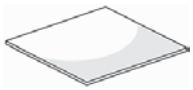	**RAB Board** RAB Board is used as a rigid air barrier. It has green colour sealer applied over one face. Installed with green side facing out.	6 6	2450 3000	1200 1200	**402980** **402981**
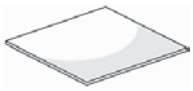	**HomeRAB Pre-Cladding** Used as a rigid air barrier. It has green colour sealer applied over one face. Installed with green side facing out.	4.5 4.5	2450 2750	1200 1200	**404766** **404768**

All dimensions and masses provided are approximate only and subject to manufacturing tolerances.

Table 7

Accessories/tools supplied by James Hardie			
	Description	Quantity/size (approx)	Product code
	CLD Structural Cavity Batten 19mm thick fibre cement cavity batten installed over RAB Board or a building underlay. Titan Façade Panels are fixed to the battens.	19 x 70mm, 2450mm long Pack of 96 battens	**403870**
	Aluminium 'T' Socket T socket is used to form a horizontal negative joint.	2400mm and 3000mm	**304103** **304105**
	HardieBlade™ Saw Blade Diamond tip 184mm diameter fibre cement circular saw blade. Spacers not included.	Each	**300660**
	James Hardie Countersunk Tungsten Carbide Drill Bit 9mm Countersinking bit.	Each	**300567**
	Annular Threaded Nail 25 x 2.5mm nail.	500gm	**300390**
	Nylon Washer Neoprene washer is used to between the panel and screw head for weather tightness.	1,000 per pack	**302761**
	CLD Batten Flashing Aluminium Used to flash the battens normally at floor joist levels.	Pack of 20	**304651**
	CLD Batten Corner Flashing Aluminium Used to flash the battens around corners at floor joist levels.	Pack of 20	**304652**
	uPVC Vent Strip 75mm x 18mm wide x 3000mm	25 per pack	**302490**
	uPVC Horizontal Flashing For RAB Board horizontal joint.		**305152**

Accessories/tools not supplied By James Hardie

James Hardie recommends the following products for use in conjunction with Titan Façade Panel, RAB Board and CLD Structural Cavity Batten. James Hardie does not supply these products and does not provide a warranty for their use. Please contact component manufacturer for information on their warranties and further information on their products.

Product	Description
	Flexible Underlay Must comply with Table 23 of E2/AS1
	Flexible Window Opening Flashing Tape A flexible self-adhesive tape used in preparation of a window. Refer to the window installation section in this manual for more information. e.g. Protecto by Protecto Wrap or Aluband® by Thermakraft Protecto: 0800 776 9727 Thermakraft: 0800 806 595
	RAB Board Vertical Joint Sealing Tape The tape to be used to seal RAB Board vertical joints. Super-stick Building Tape® by Marshall Innovations or 3M™ All Weather Flashing Tape 8067 by 3M Marshall Innovations: 0800 776 9727 3M™: 0800 474 787
	Polypropylene DPC Tape 200mm wide Product used over flexible underlay at external and internal corners
	Titanium Drill Bit Used to pre-drill clearance holes for exposed head screws.
	Epoxy Flush Sealing (2 Part) Countersunk head screws are flush sealed using Nuplex Fairing cream or similar epoxy.
	Adhesive Sealant Sikaflex-11FC Polyurethane adhesive sealant manufactured by Sika for applying between the panels and battens. Refer to section 7 for more information. SIKA 0800 SIKANZ. 'Seal N Flex-1' Polyurethane adhesive sealant manufactured by BOSTIK for applying between the panels and battens. Refer to section 7 for more information. BOSTIK: AKL: (09) 579 6253, WGTN: (04) 567 5119, CHCH: (03) 366 2583.
	Flexible Sealant Required to seal the vertical joints. Bostik Seal N Flex-1, Sikaflex AT-Façade or similar.
Fasteners	
	Countersunk Screw 25mm x 8-10g countersunk screws (Class 3/4 or stainless steel) for fixing of Titan Façade Panels to CLD Structural Cavity Battens. EDL stainless steel 304 screw square drive CODE: 03S101T17US. Black Fasteners stainless steel 304 Code: WSSFSSQ08M.
	Exposed Head Fasteners 25mm x 8-15g pan head screws (Class 3/4) for fixing of Titan Façade Panels to CLD Structural Cavity Battens.
	C-25 Stainless Steel Brad Nails 304SS brad nails used to install Titan Façade Panels to the CLD Structural Cavity Battens using a straight bradder. Paslode: (09) 477 3000
	Countersunk Screw 50mm x 9-10g Class 3/4 for fixing CLD Structural Cavity Batten to steel framing.
	65 x 2.87mm RounDrive Ring Shank Nail For fixing CLD Structural Cavity Battens to the framing. Paslode: (09) 477 3000
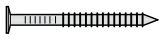	HardieFlex™ Hot Dipped Galvanised and Stainless Steel 316 Nail For RAB Board Fixing. 40 x 2.8mm
Protecto Wrap , Aluband®, Dulux Acraprime ,Tyvek® Flexwrap™ are trademarks registered to their manufacturers.	

14 Details

Various details outlined in the following table are available on Pages 15 to 30

Details		
Description	**Figure**	**Page**
Framing Setout	Figure 1	15
Batten Fixing Setout	Figure 2	15
Panel Layout Options	Figure 3	16
Panel Fixing Setout	Figure 4	16
Foundation Detail	Figure 5	17
Vertical Expressed Joint Using 'T' Head Brad Nails	Figure 6	17
Intermediate Stud Fixing Using 'T' Head Brad Nails	Figure 7	18
Alternate Vertical Expressed Joint Using Annular Threaded Nails	Figure 8	18
Alternate Intermediate Stud Fixing Using Annular Threaded Nails	Figure 9	19
Alternate Vertical Expressed Joint Using Countersunk Screws	Figure 10	19
Alternate Intermediate Stud Fixing Using Countersunk Screws	Figure 11	20
Alternate Vertical Expressed Joint Using Exposed Screws	Figure 12	20
Internal Corner	Figure 13	21
External Corner	Figure 14	21
Alternate Corner	Figure 15	22
Jointing of CLD Structural Cavity Batten	Figure 16	22
Window Sill	Figure 17	23
Window Jamb	Figure 18	23
Window Head	Figure 19	24
Soffit Detail	Figure 20	24
Mid Floor Aluminium Socket Joint	Figure 21	25
'T' Socket Joint At Floor Joist	Figure 22	26
'T' Socket Joint at Floor Joist Corner	Figure 23	27
Drained Flashing Joint At Floor Joist	Figure 24	28
Enclosed Deck	Figure 25	29
One Piece Apron Flashing Joint	Figure 26	29
Roof to Wall Junction Detail	Figure 27	30
Parapet Flashing	Figure 28	30
Meter Box At Sill	Figure 29	31
Meter Box At Jamb	Figure 30	31
Meter Box At Head	Figure 31	32
Socket Joint Detail At Window Head	Figure 32	32
'T' Socket Joint At Window Head	Figure 33	33
'T' Socket Joint At Window Jamp	Figure 34	34
Cavity pipe penetration	Figure 35	34

Figure 1: Framing setout

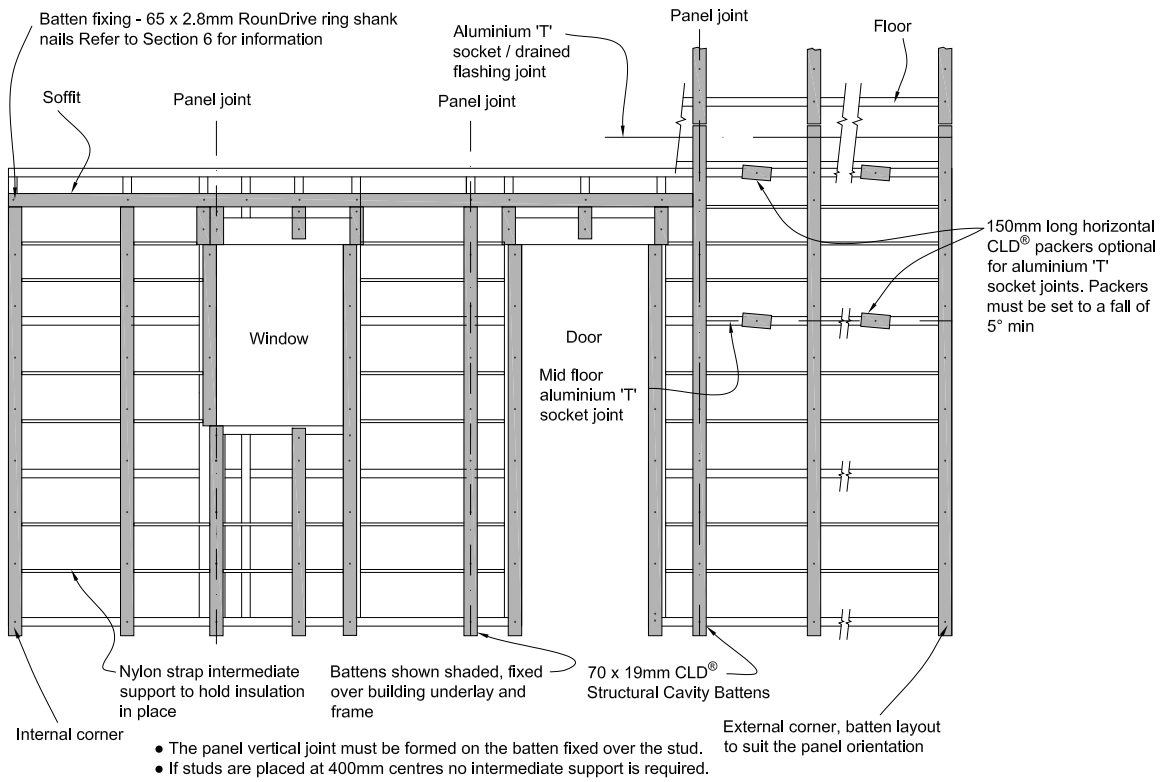

Figure 2: Batten fixing setout

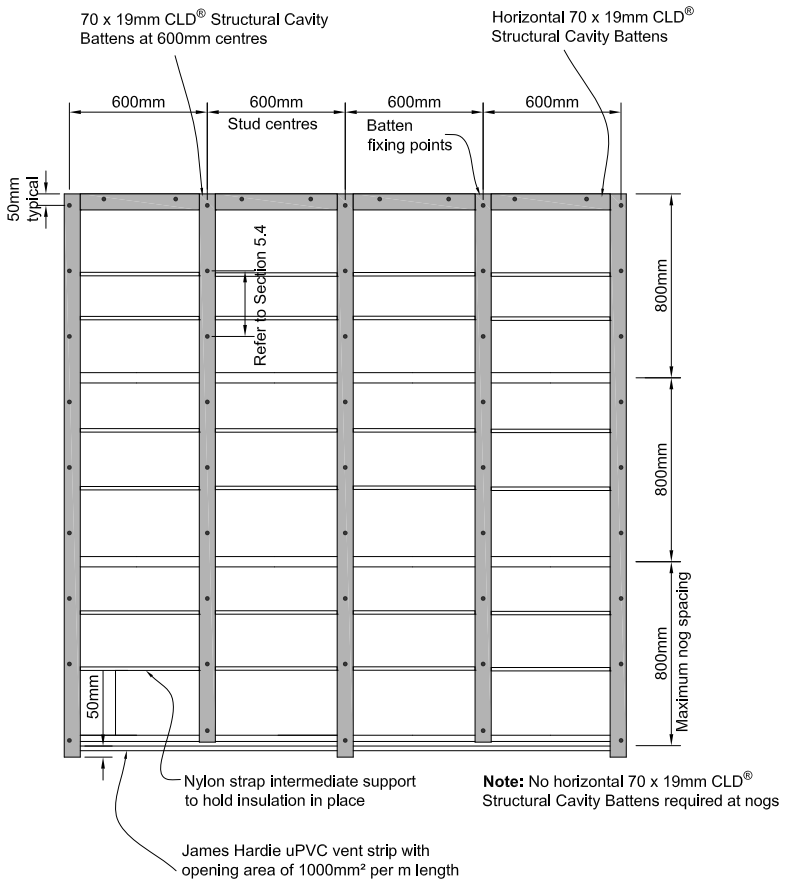

Figure 3: Panel Layout Options

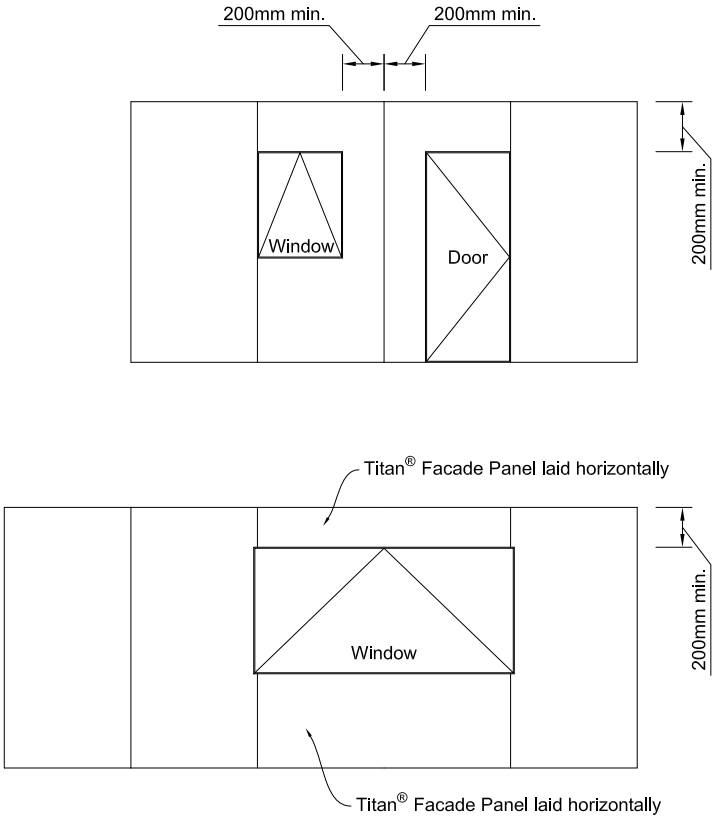

Figure 4: Panel fixing setout

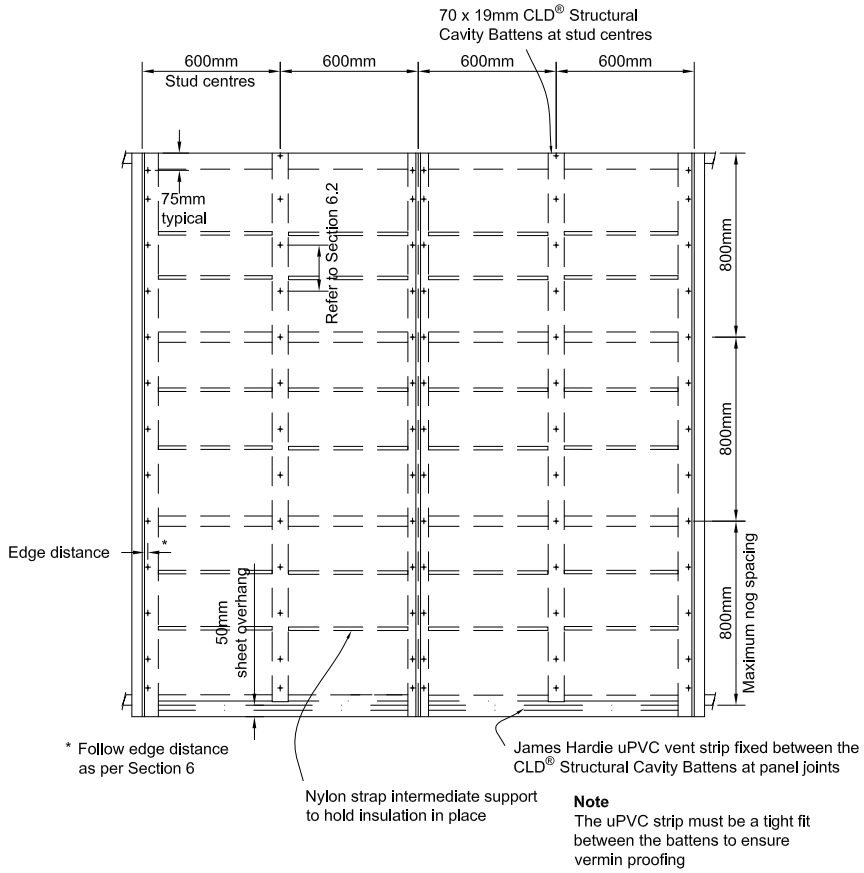

Figure 5: Foundation detail

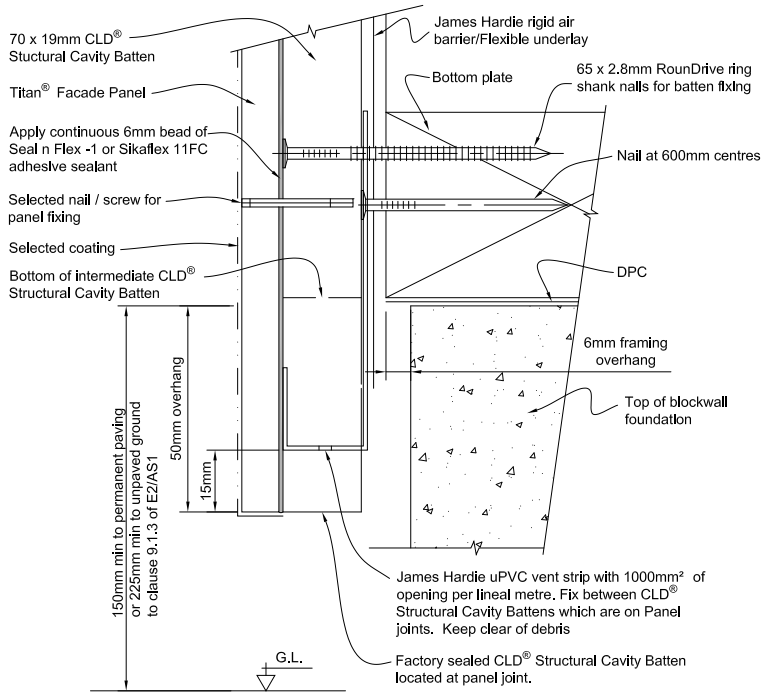

Notes:

- Check panel extends past bottom plate as specified in Architects specification (50mm min).
- uPVC Vent strip must remain level and secure during construction. Cut and fix uPVC vent strip between CLD® Structural Cavity Battens fixed under the panel joints.
- Check vent strip is free from site debris.
- Refer to Table 3 for Titan® Facade Panel fixing options.
- Push panel hard against CLD® Structural Cavity Batten.

Figure 6: Vertical expressed joint using 'T' head brad nails

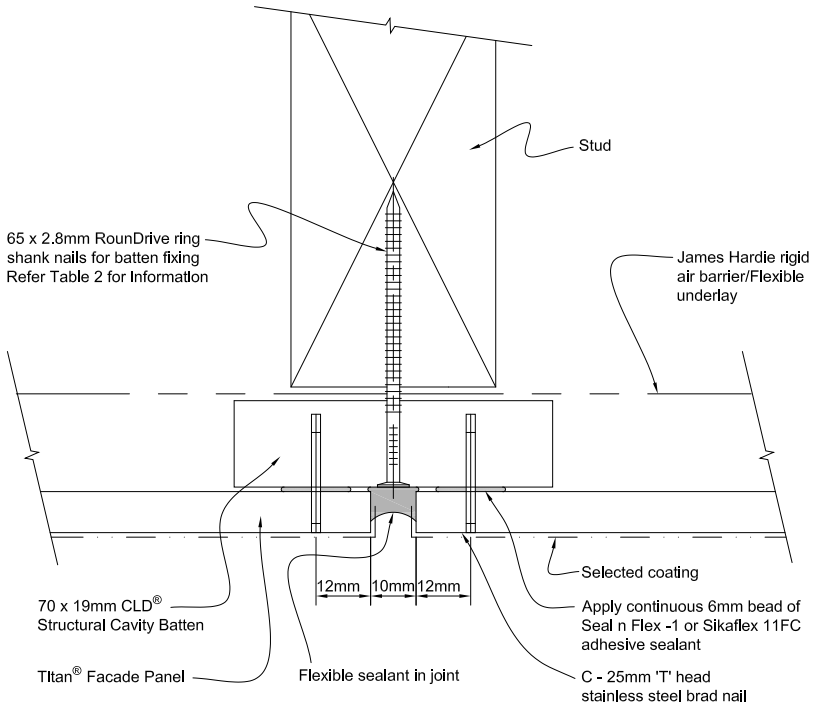

Notes:

- Ensure that a continuous 6mm bead of adhesive sealant is applied between CLD® Structural Cavity Batten and Titan® Facade Panel.
- Ensure that the required edge distance is maintained when fixing.
- Seal cut edges with a primer compatible with final coatings.
- Refer to Table 3 for Titan® Facade Panel fixing options.
- Push panel hard against CLD® Structural Cavity Batten.

Figure 7: Intermediate stud fixing using 'T' head brad nails

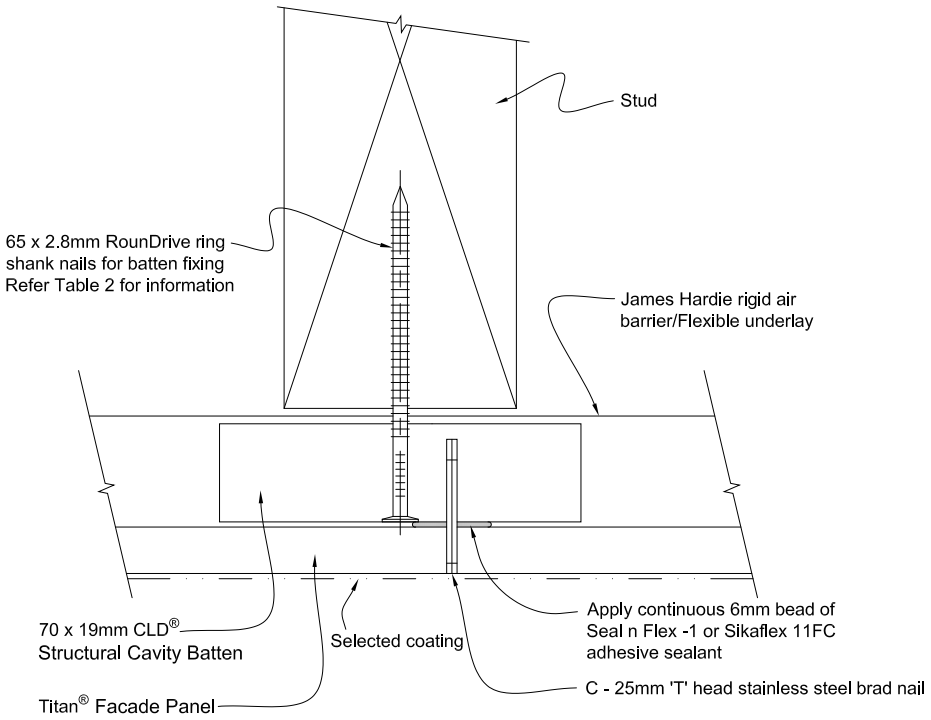

Notes:

- Fix panel from the middle of the board outwards.
- Refer to Table 3 for Titan® Facade Panel fixing options.
- Push panel hard against CLD® Structural Cavity Batten.

Figure 8: Alternate vertical expressed joint using annular threaded nails

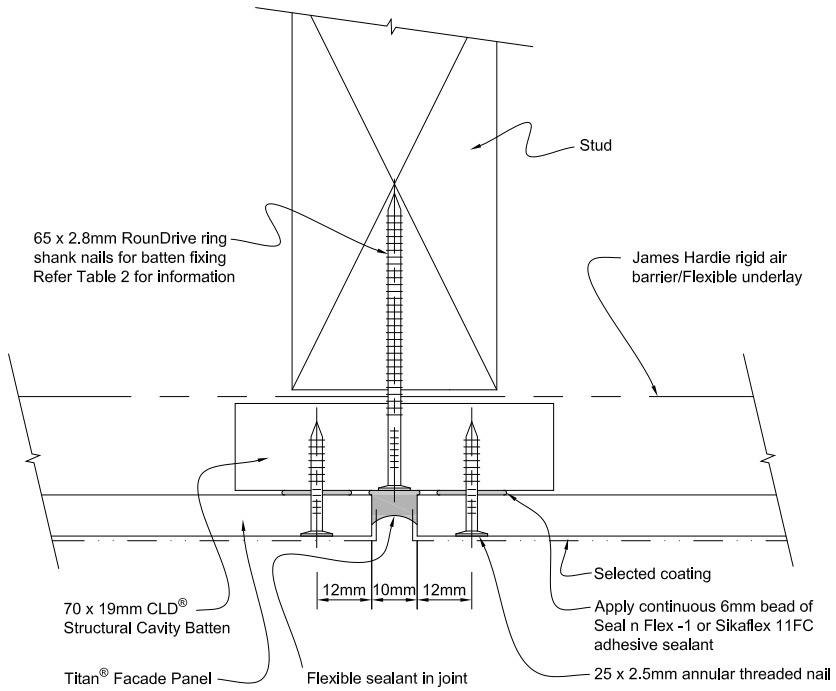

Notes:

- Ensure that a continuous 6mm bead of adhesive sealant is applied between CLD® Structural Cavity Batten and Titan® Facade Panel.
- Ensure that the required edge distance is maintained when fixing.
- Seal cut edges with a primer compatible with final coatings.
- Refer to Table 3 for Titan® Facade Panel fixing options.
- Push panel hard against CLD® Structural Cavity Batten.

Figure 9: Alternate intermediate stud fixing using annular threaded nails

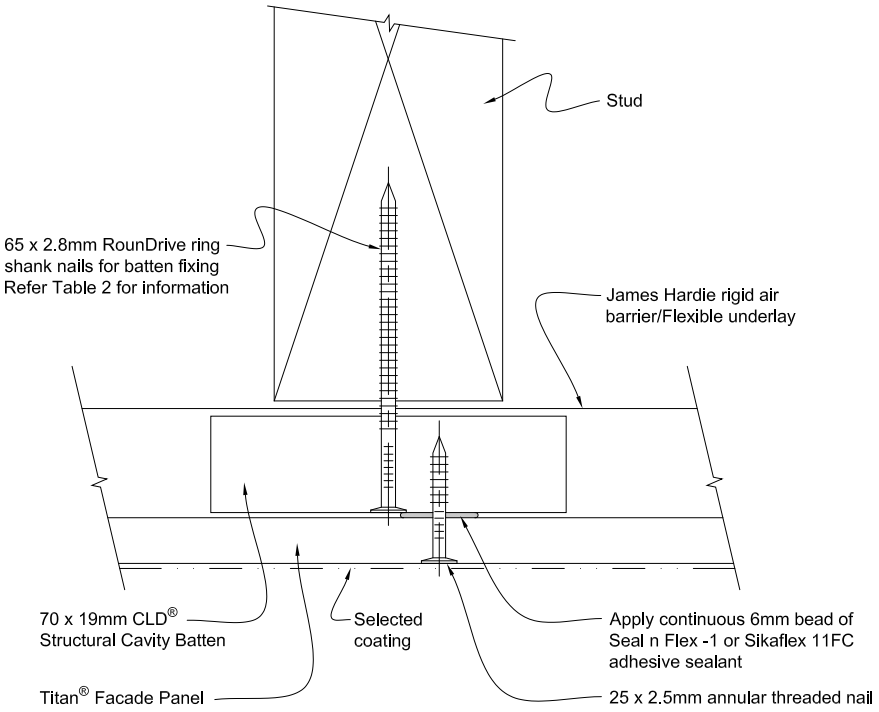

Notes:

- Fix panel from the middle of the board outwards.
- Refer to Table 3 for Titan® Facade Panel fixing options.
- Push panel hard against CLD® Structural Cavity Batten.

Figure 10: Alternate vertical expressed joint using countersunk screws

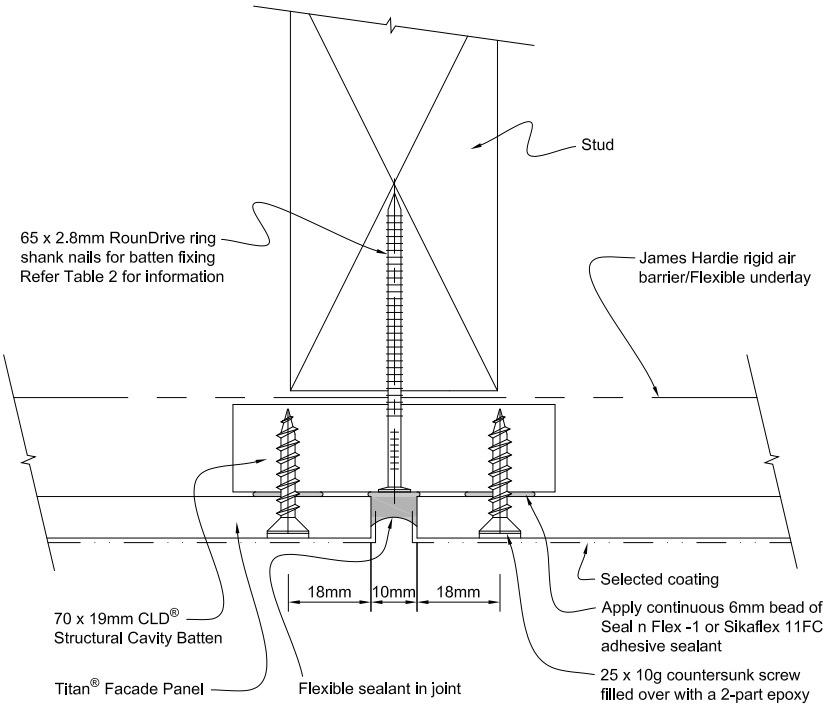

Notes:

- Ensure that a continuous 6mm bead of adhesive sealant is applied between CLD® Structural Cavity Batten and Titan® Facade Panel.
- Ensure that the required edge distance is maintained when fixing.
- Seal cut edges with a primer compatible with final coatings.
- Refer to Table 3 for Titan® Facade Panel fixing options.
- Push panel hard against CLD® Structural Cavity Batten.

Figure 11: Alternate intermediate stud fixing using countersunk screws

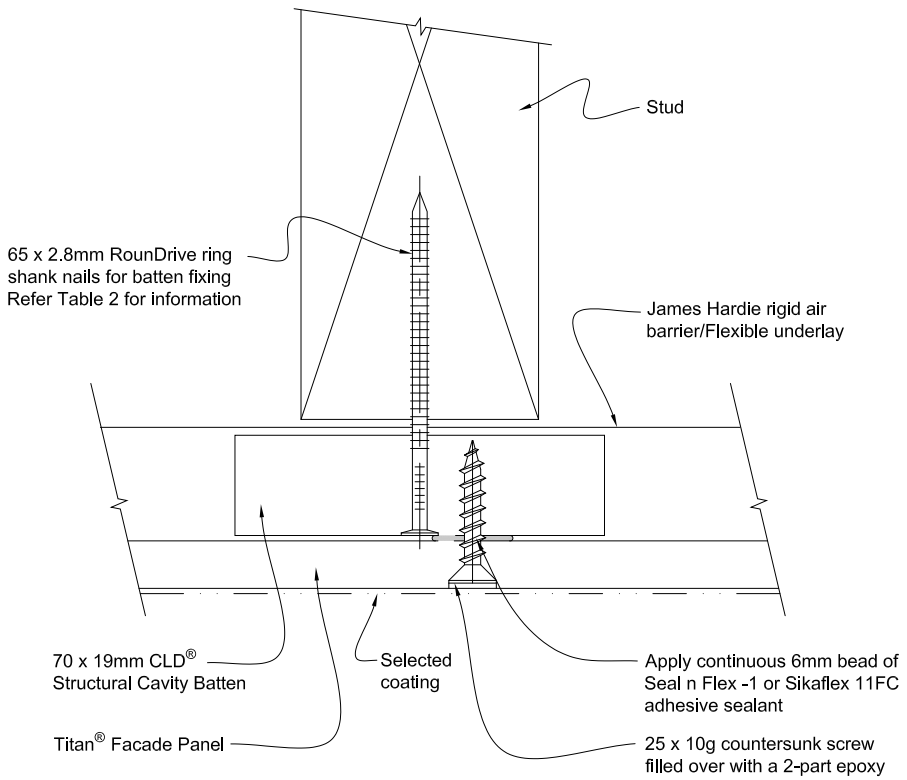

Notes:

- Fix panel from the middle of the board outwards.
- Refer to Table 3 for Titan® Facade Panel fixing options.
- Push panel hard against CLD® Structural Cavity Batten.

Figure 12: Alternate vertical expressed joint using exposed screws

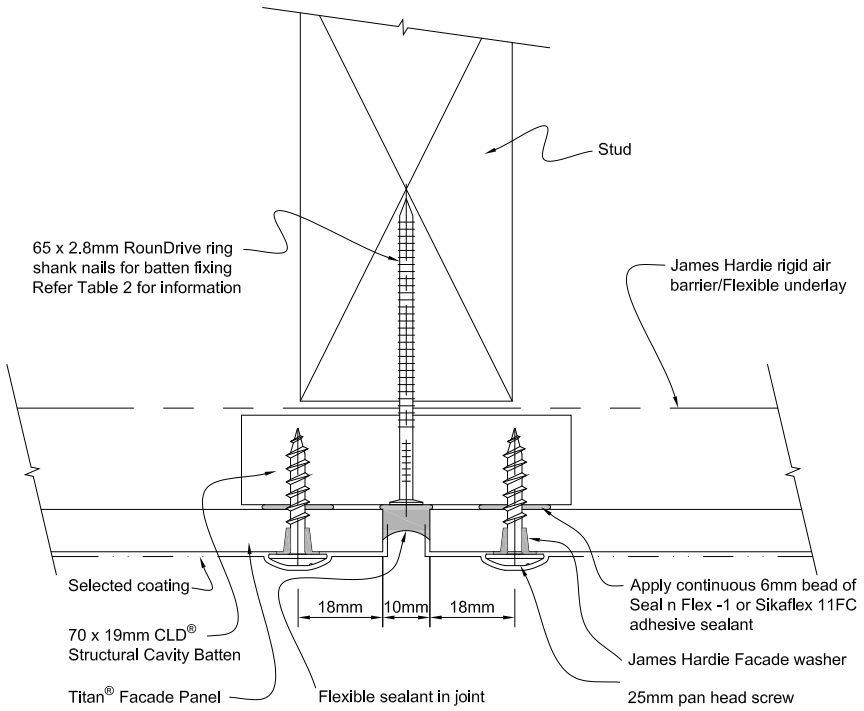

Notes:

- Ensure that a continuous 6mm bead of adhesive sealant is applied between CLD® Structural Cavity Batten and Titan® Facade Panel.
- Ensure that the required edge distance is maintained when fixing.
- Seal cut edges with a primer compatible with final coatings.
- Refer to Table 3 for Titan® Facade Panel fixing options.
- Push panel hard against CLD® Structural Cavity Batten.

Figure 13: Internal corner

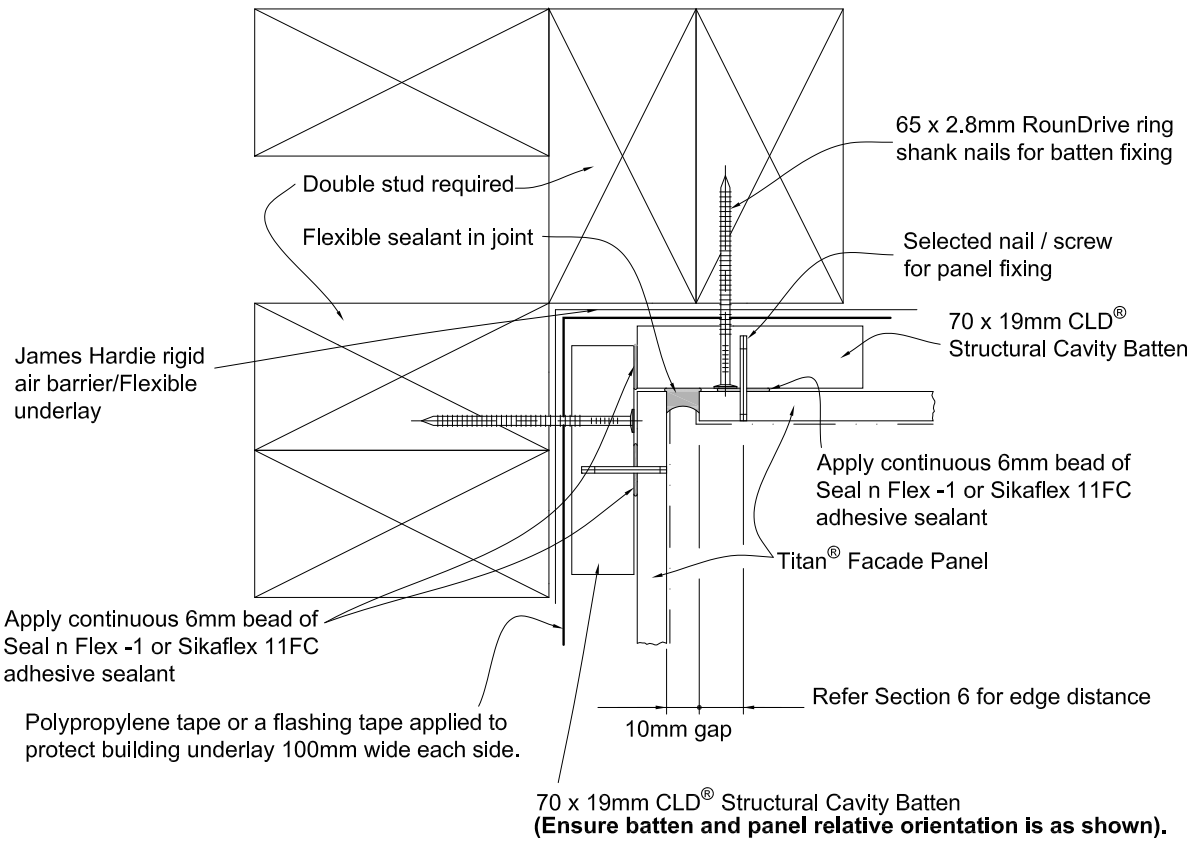

Figure 14: External corner

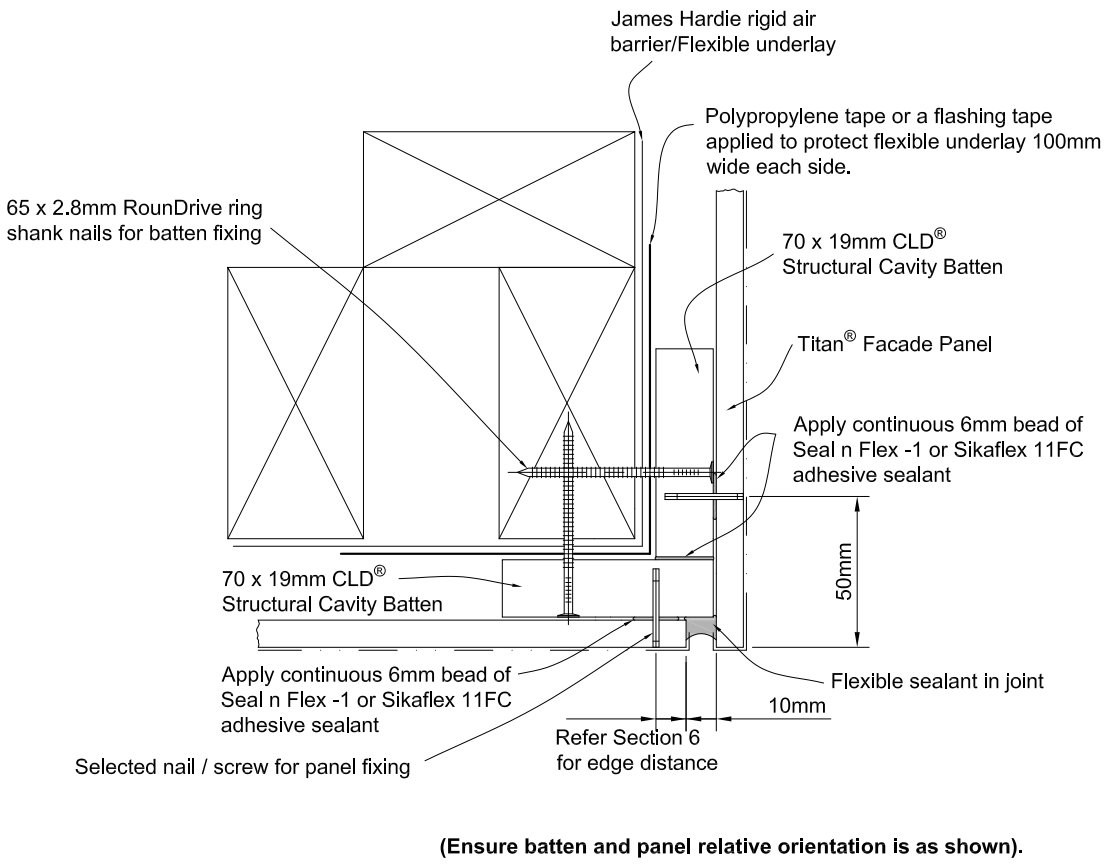

Figure 15: Alternative external corner

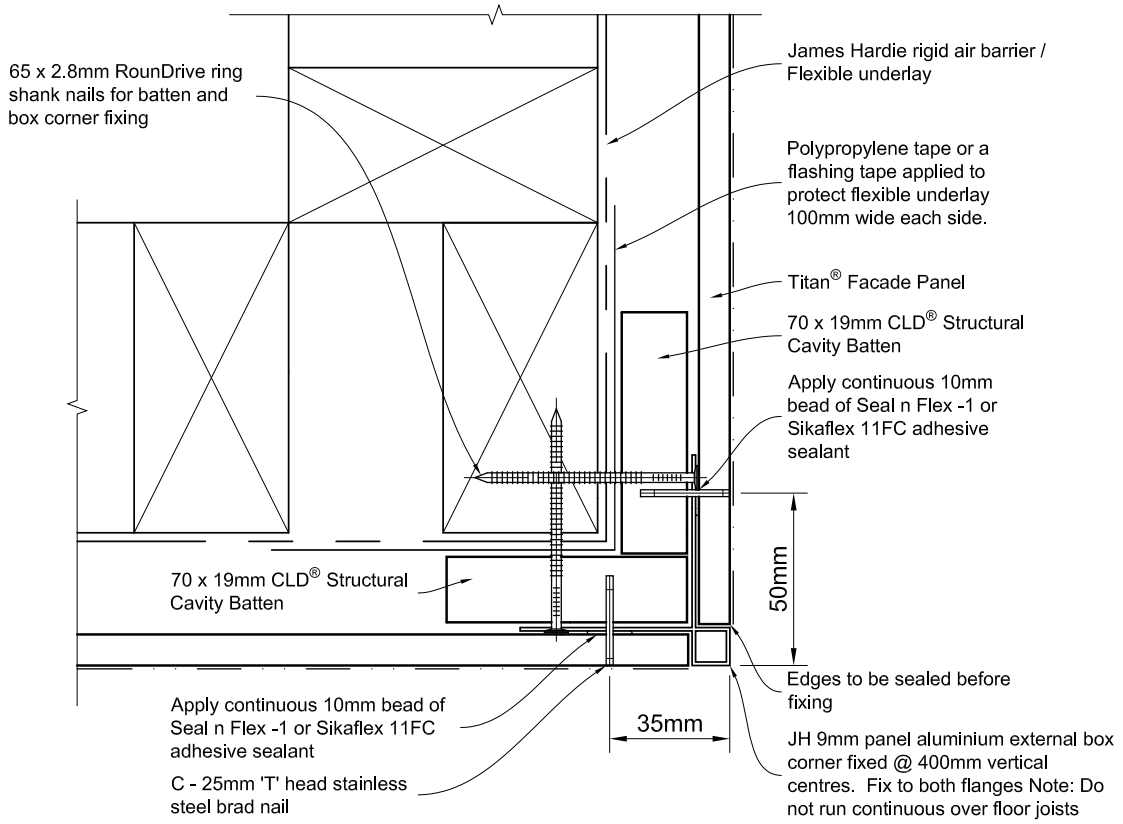

Figure 16: Jointing of CLD Structural Cavity Batten

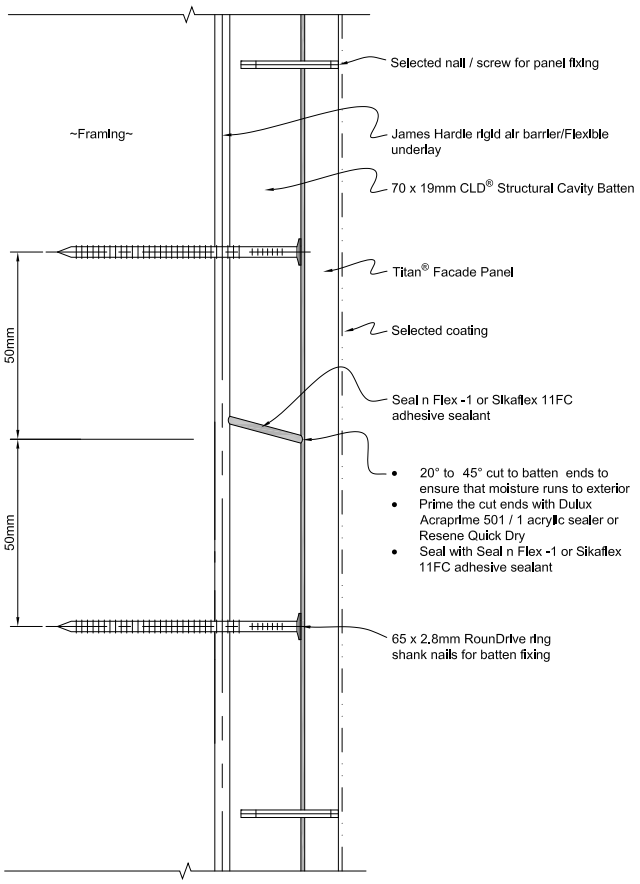

Figure 17: Window sill

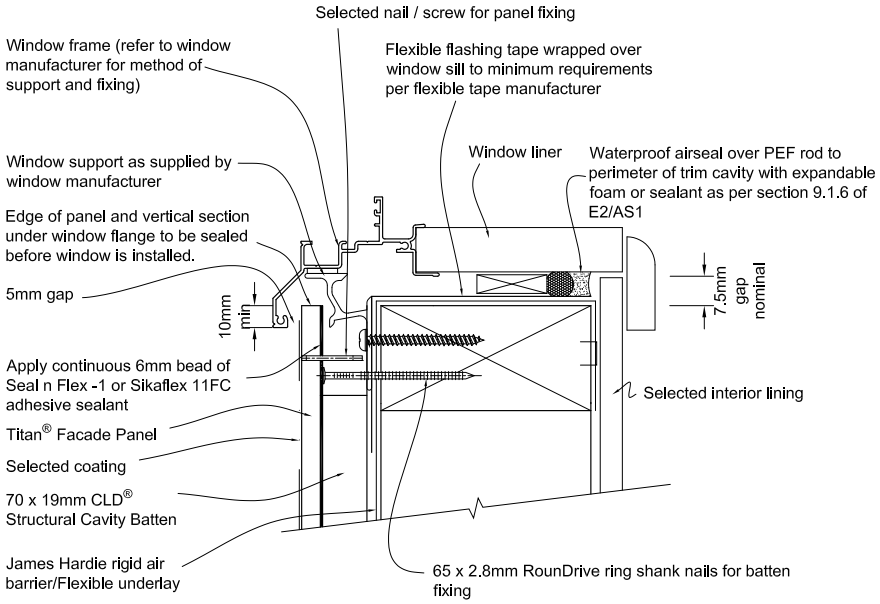

General notes for materials selection

- Flashing materials must be selected based on environmental exposure, refer to NZS 3604 and Table 20 of NZBC E2/AS1.
- Building underlay must comply with acceptable solution E2/AS1.
- Flashing tape must have proven compatibility with the selected flexible underlay and other materials with which it comes into contact.

Refer to the manufacturer or supplier for technical information for these materials.

Figure 18: Window jamb

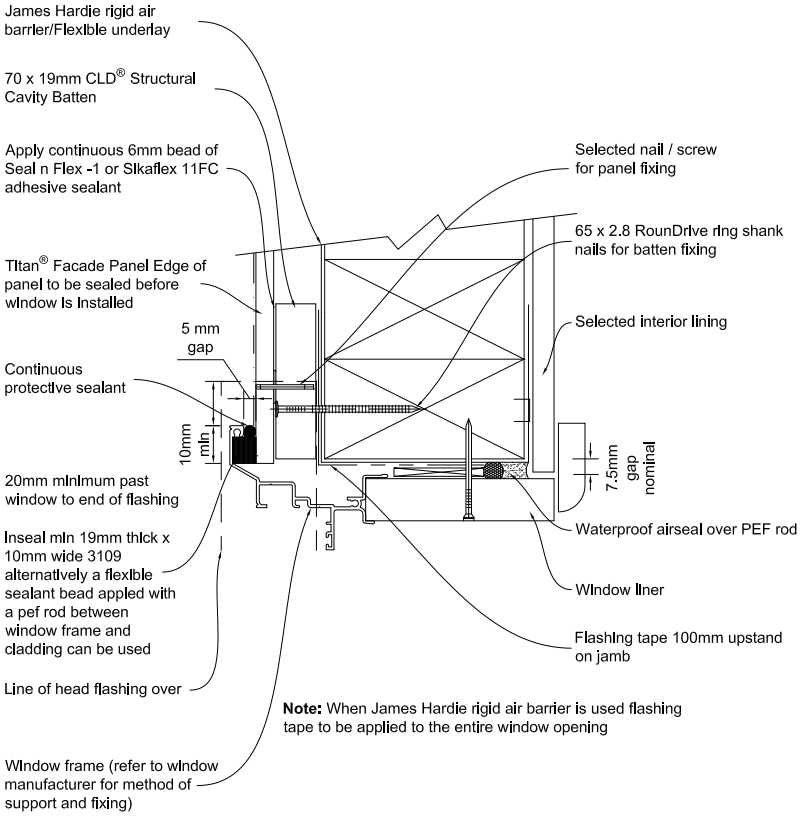

Figure 19: Window head

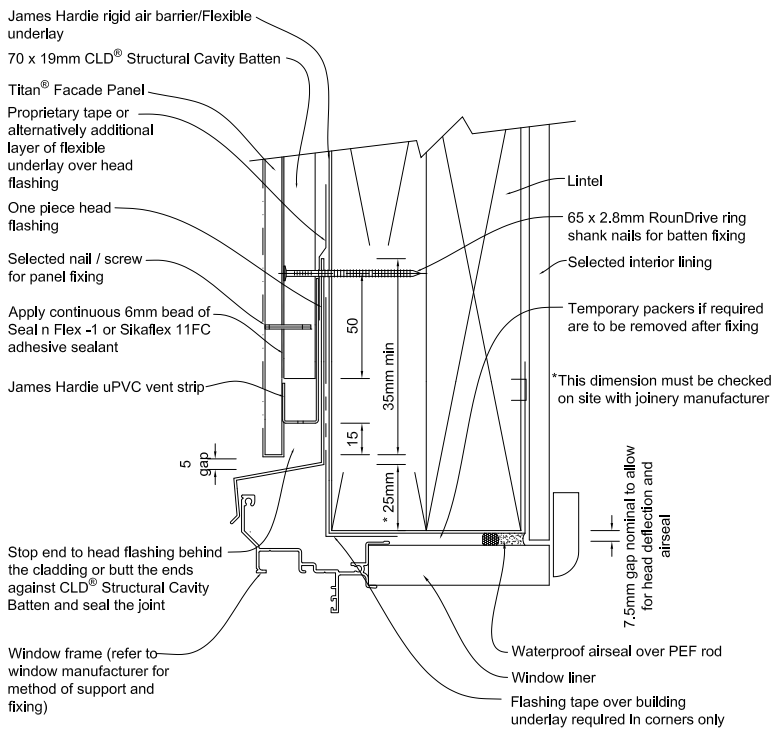

Note:

- When James Hardie rigid air barriers are used flashing tape to be applied to the entire window opening.
- Sealant must be installed between head flashing and window flange in VH and EH wind zones and SED projects.
- Alternatively, the head flashings can be formed with stop ends as per E2/AS1

Figure 20: Soffit detail

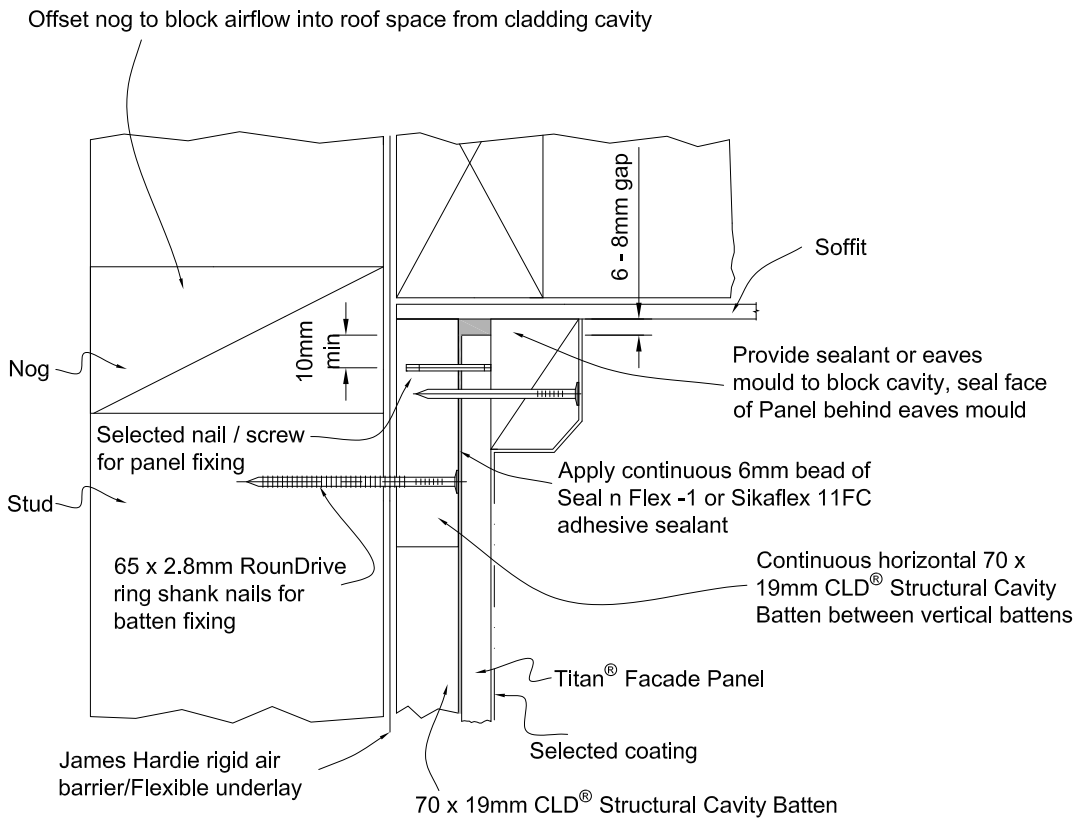

Figure 21: Mid floor aluminium socket joint

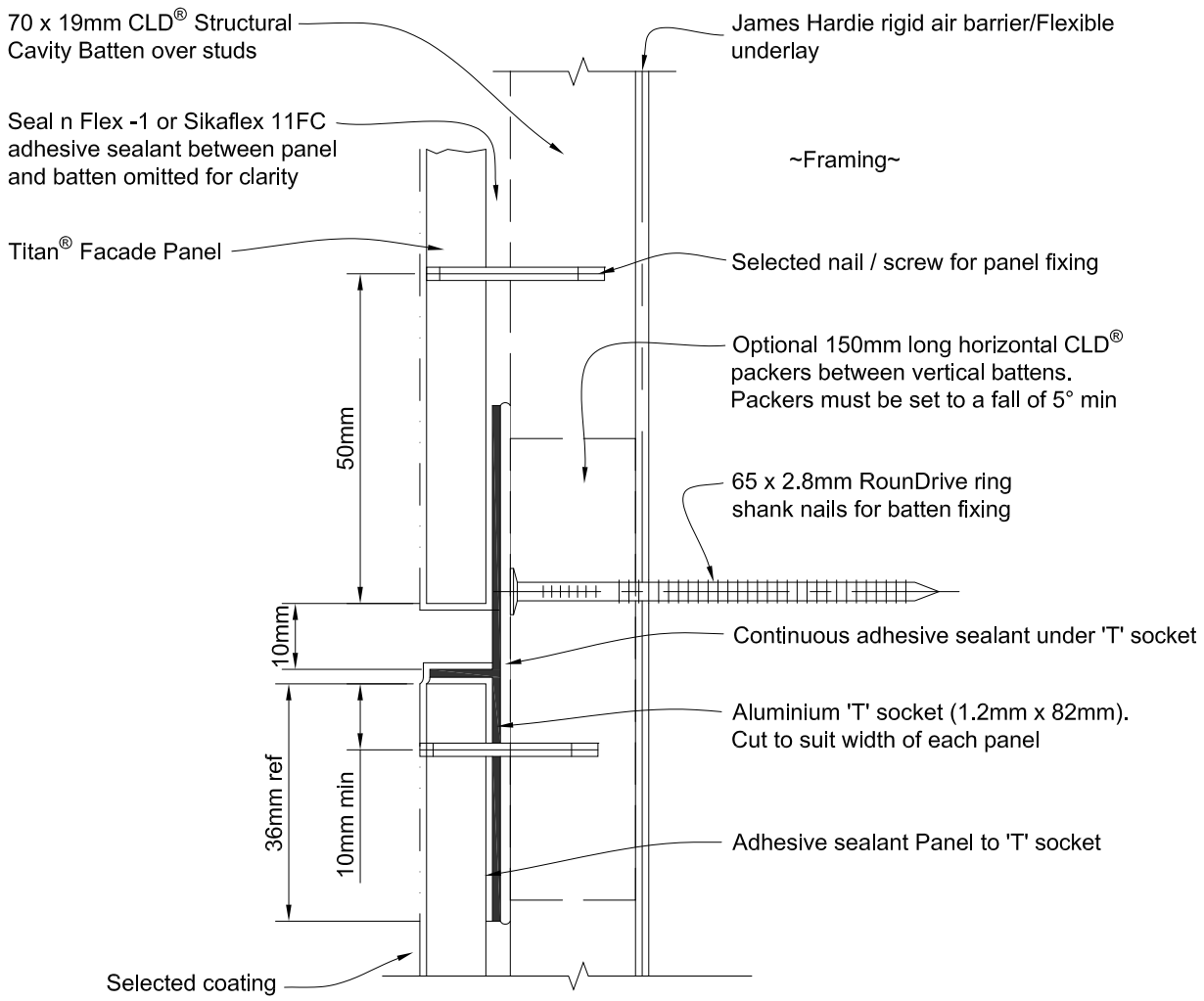

Step 1
- Ensure that flexible underlay / James Hardie rigid air barrier is in place.

Step 2
- 70 x 19mm CLD® Structural Cavity Battens to be installed over the studs.
- Nylon strapping intermediate support to be provided to hold insulation in place between studs.

Step 3
- Install the lower panel complete with Aluminium 'T' socket.
- Install the upper panel keeping a 10mm gap.

Notes:
- The Aluminium 'T' socket can be glued onto the back of the sheet on the ground. Apply two 6mm thick lines of adhesive sealant on the bottom portion of the Aluminium 'T' socket to seal. Take care to ensure continuous seal is formed between panel and Aluminium 'T' socket.
- The sealant must continue between socket flange and top panel edge.
- The Aluminium 'T' socket must be sealed using adhesive sealant to the CLD® Structural Cavity Batten.
- For edge distance of fixings refer to Section 6.
- Push panel hard against CLD® Structural Cavity Batten.

Figure 22: ‘T’ socket joint at floor joist

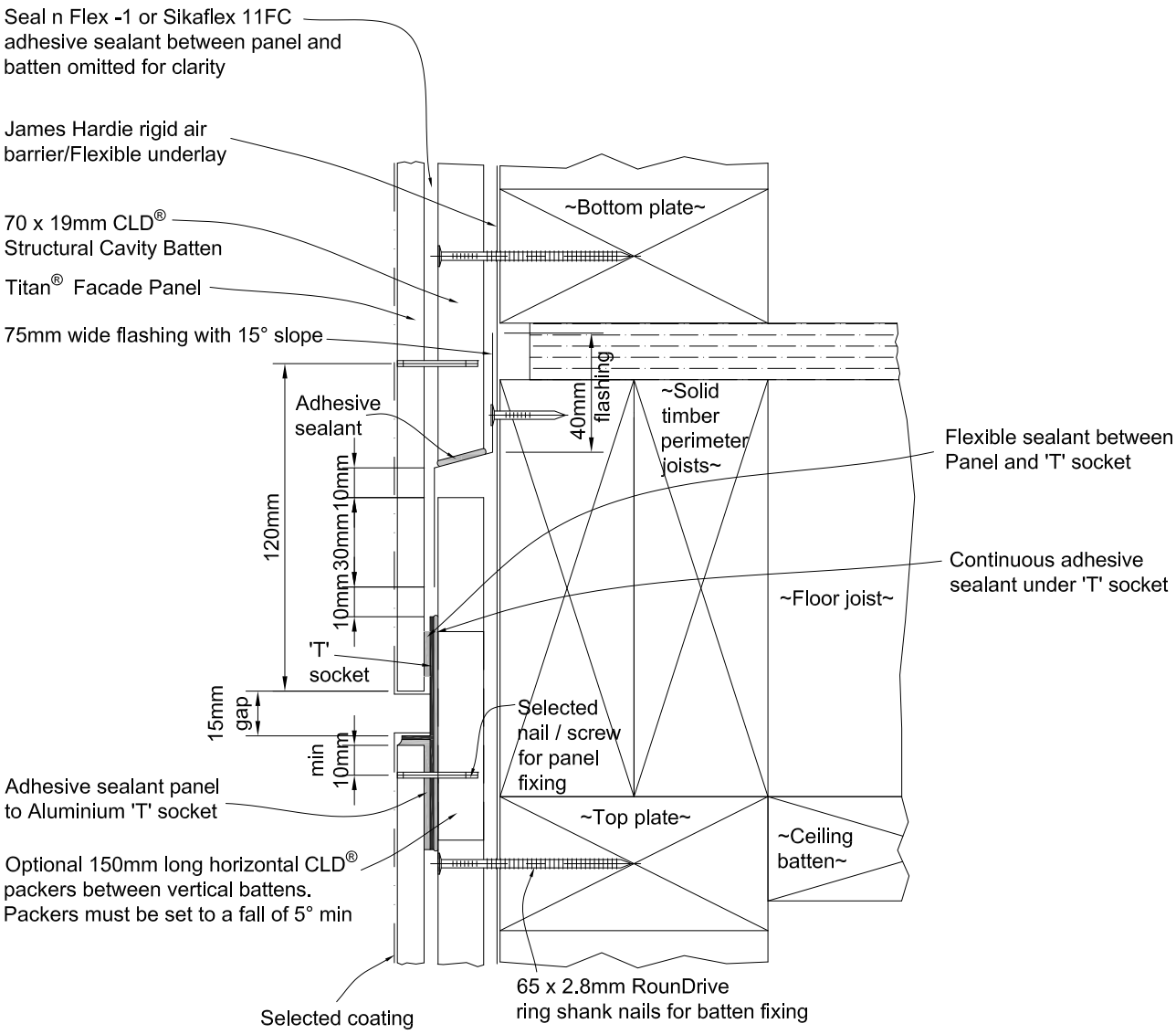

Step 1
- Check Architect's specification to confirm the type of horizontal joint required.

Step 2
- Check fixing centres and edge distances.
- Cut edges need to be primed on site.

Step 3
- Flash the horizontal gap between battens with batten flashing and seal as shown.
- Aluminium 'T' socket to be cut flush to the vertical edges of panels and should start below the batten flashing.

Step 4
- Do not fix panels or battens into floor joists.
- For edge distance of fixings refer to Section 6.

Figure 23: ‘T’ socket joint at floor joist corner

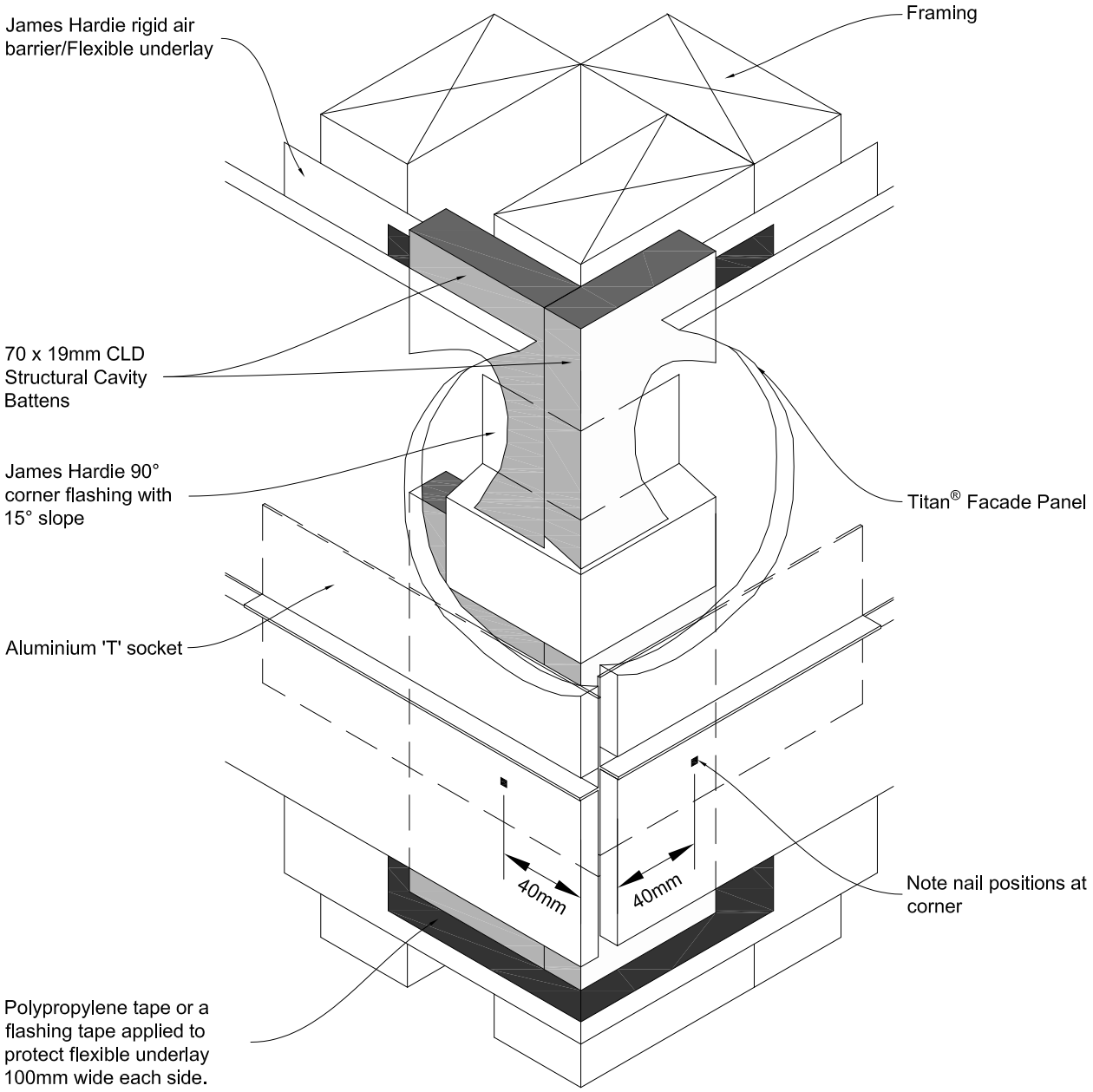

Note:

Socket joint at floor joist for internal corner may be formed using the same James Hardie 90° corner flashing.
Refer to Figure 21 for fixing of Aluminuim 'T' socket.
For edge distance of fixings refer to Section 6.

Figure 24: Drained flashing joint at floor joist

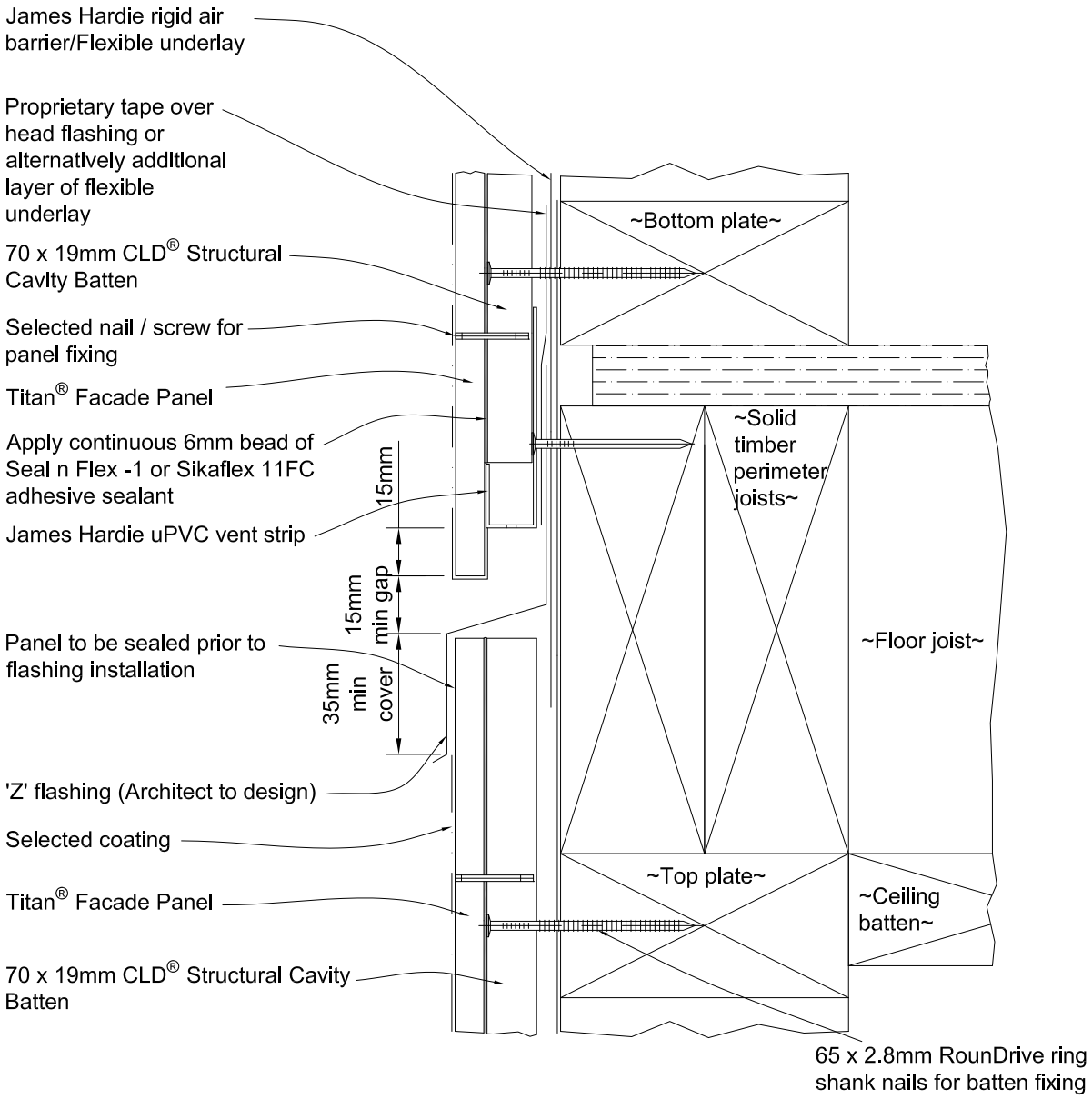

Step 1

- Check Architect's plans for the type of flashing to be used.

Step 2

- Check fixing centres and edge distances.
- If top fixings are to be hidden by the Z flashing they will need to be fixed and sealed before the Z flashing is installed.
- Cut edges need to be primed with sealer.

Step 3

- When 50 year durability is required refer Table 20 E2/AS1.

Step 4

- The flashing to be placed in the centre of the floor joists. Do not fix CLD® Structural Cavity Battens or panels into floor joists.

Figure 25: Enclosed deck

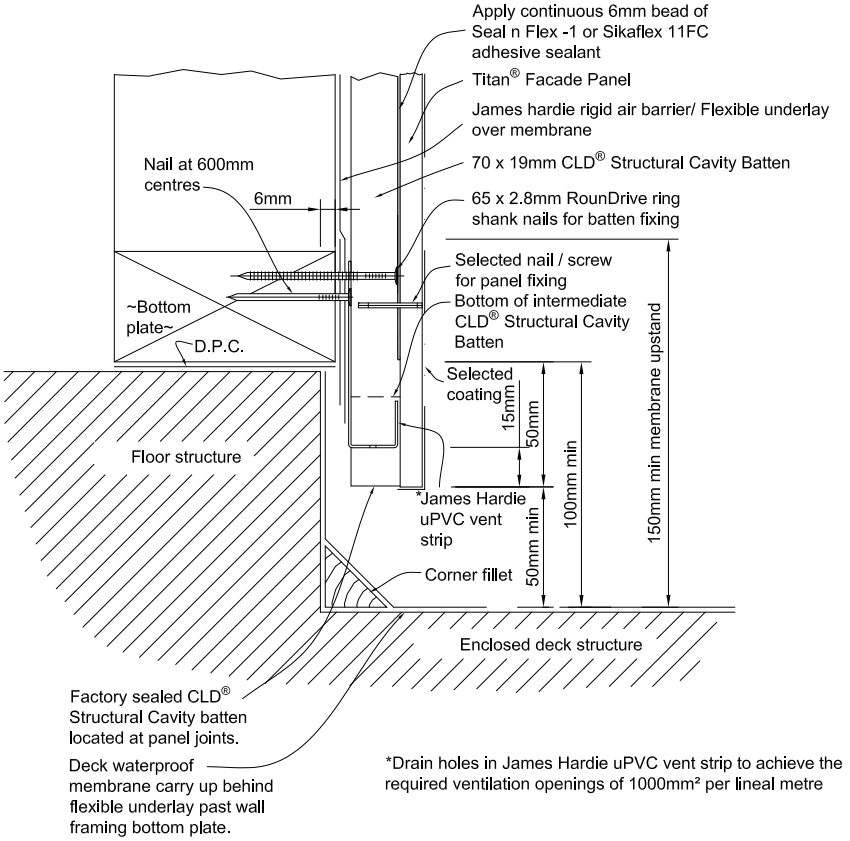

Figure 26: One piece apron flashing joint

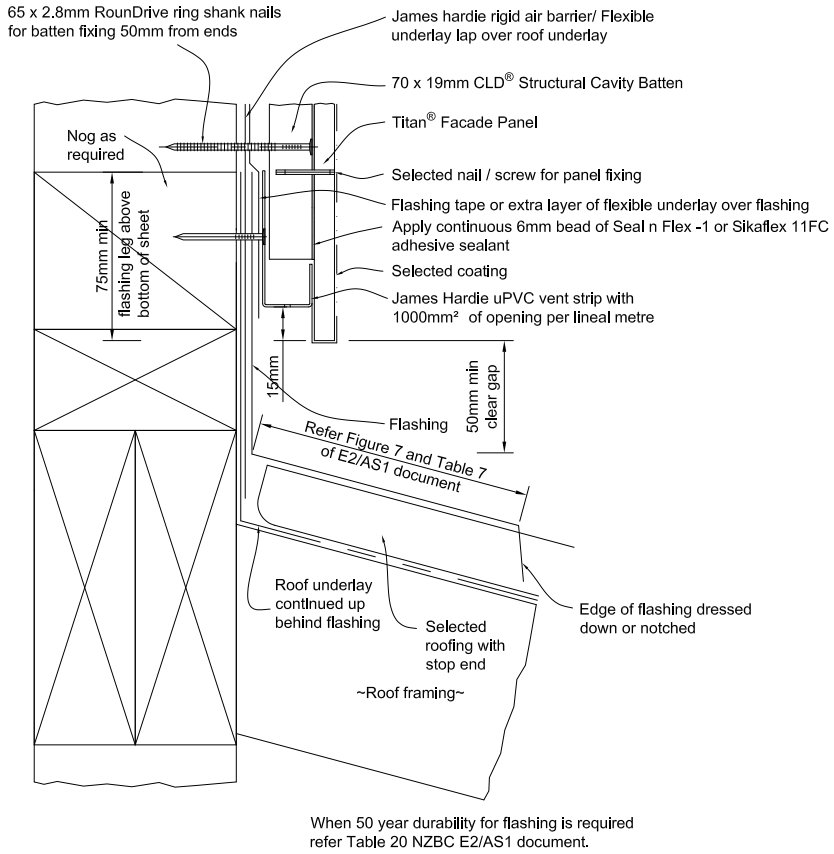

Figure 27: Roof to wall junction detail

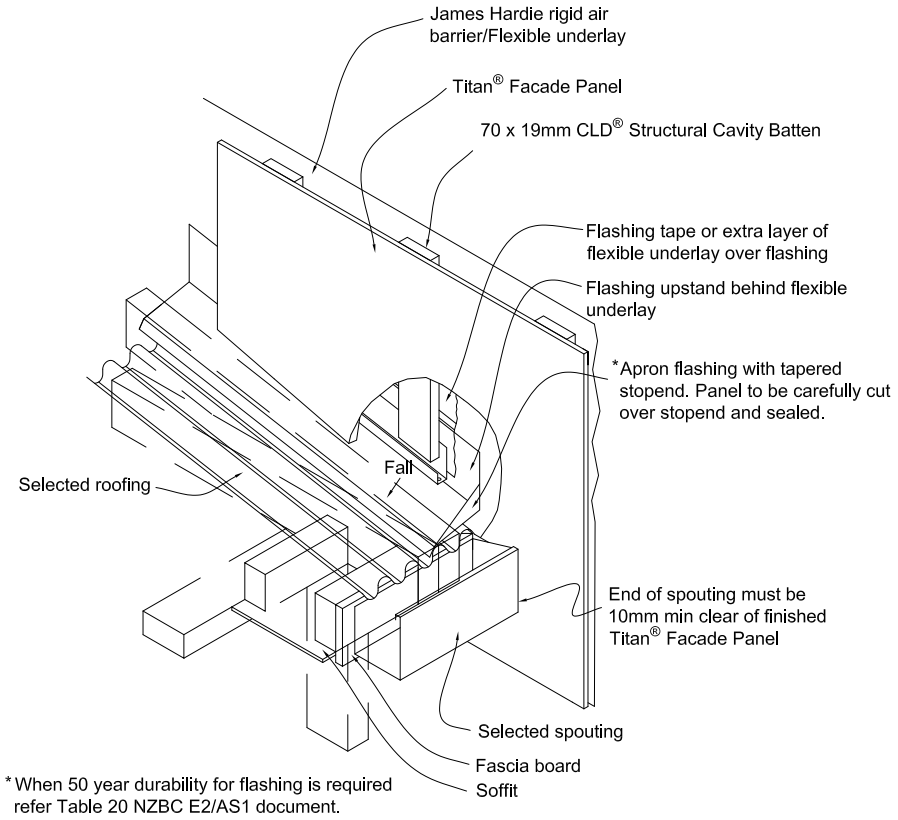

Figure 28: Parapet flashing

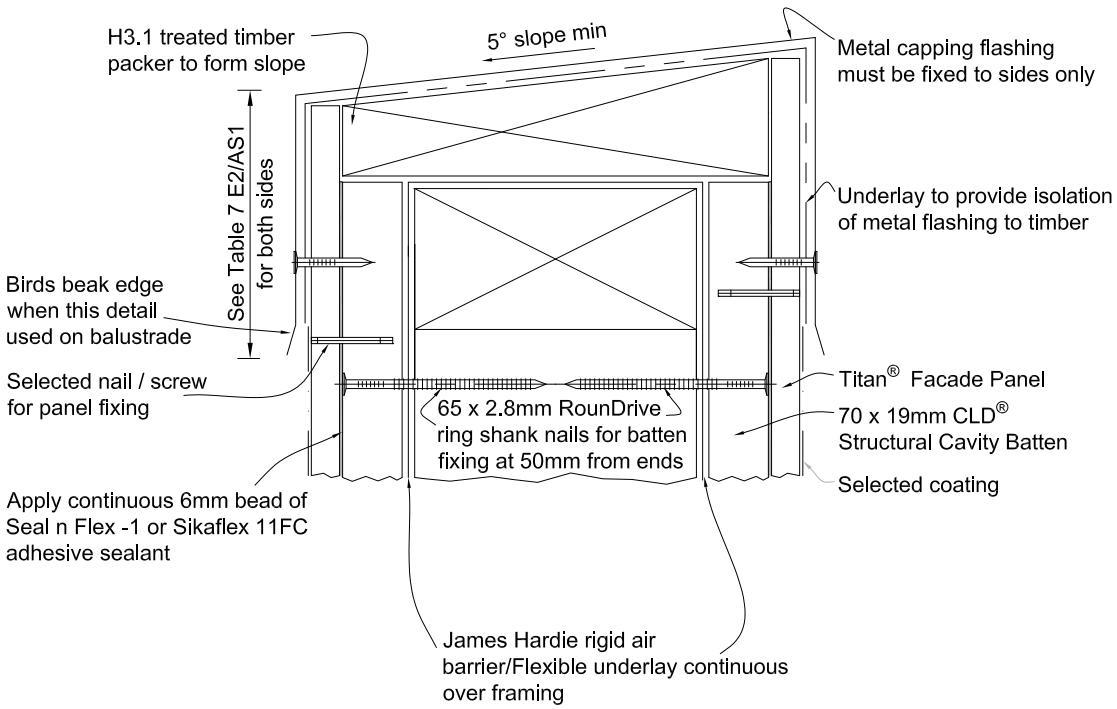

Figure 29: Meter box at sill

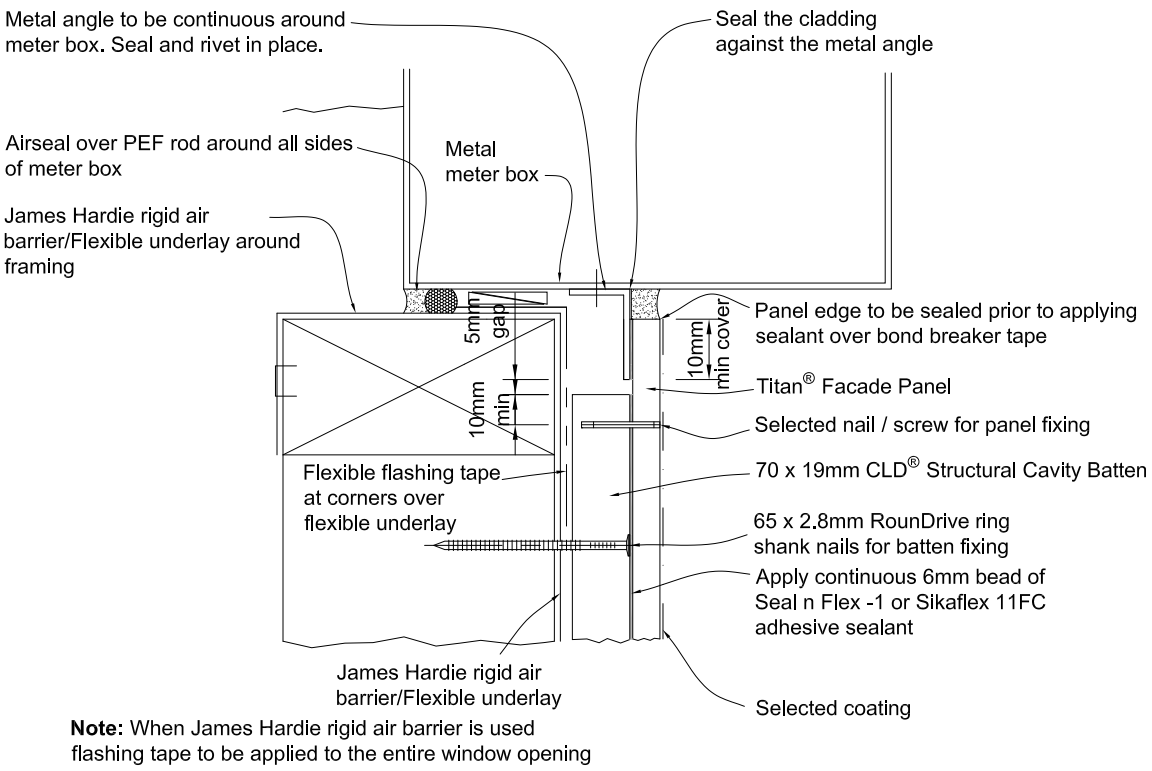

Note: When James Hardie rigid air barrier is used flashing tape to be applied to the entire window opening

Figure 30: Meter box at jamb

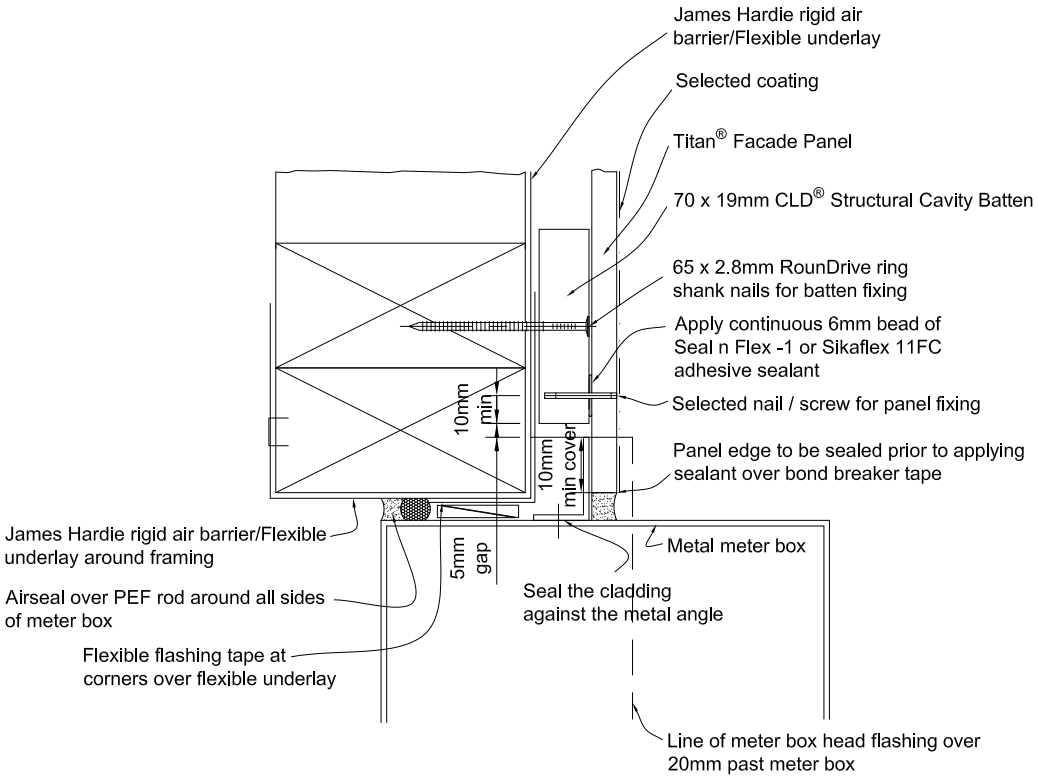

Note: When James Hardie rigid air barrier is used flashing tape to be applied to the entire opening

Figure 31: Meter box at head

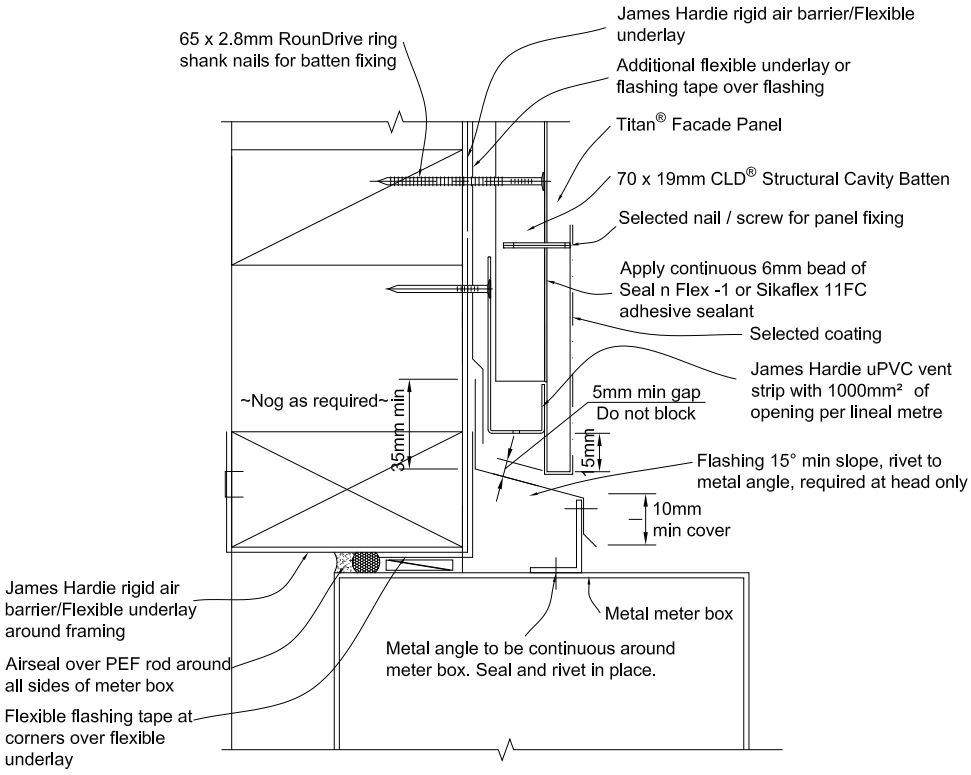

Note: When James Hardie rigid air barrier is used flashing tape to be applied to the entire opening

Figure 32: Socket joint detail at window head

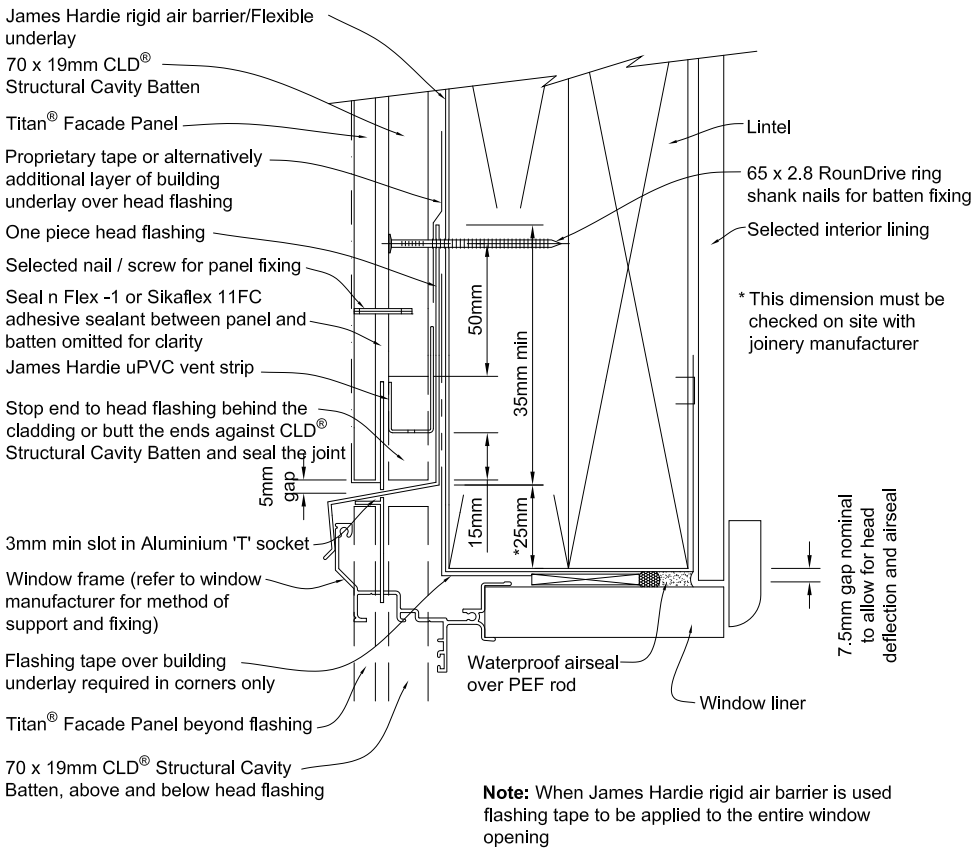

Note: When James Hardie rigid air barrier is used flashing tape to be applied to the entire window opening

Figure 33: 'T' socket joint at window head

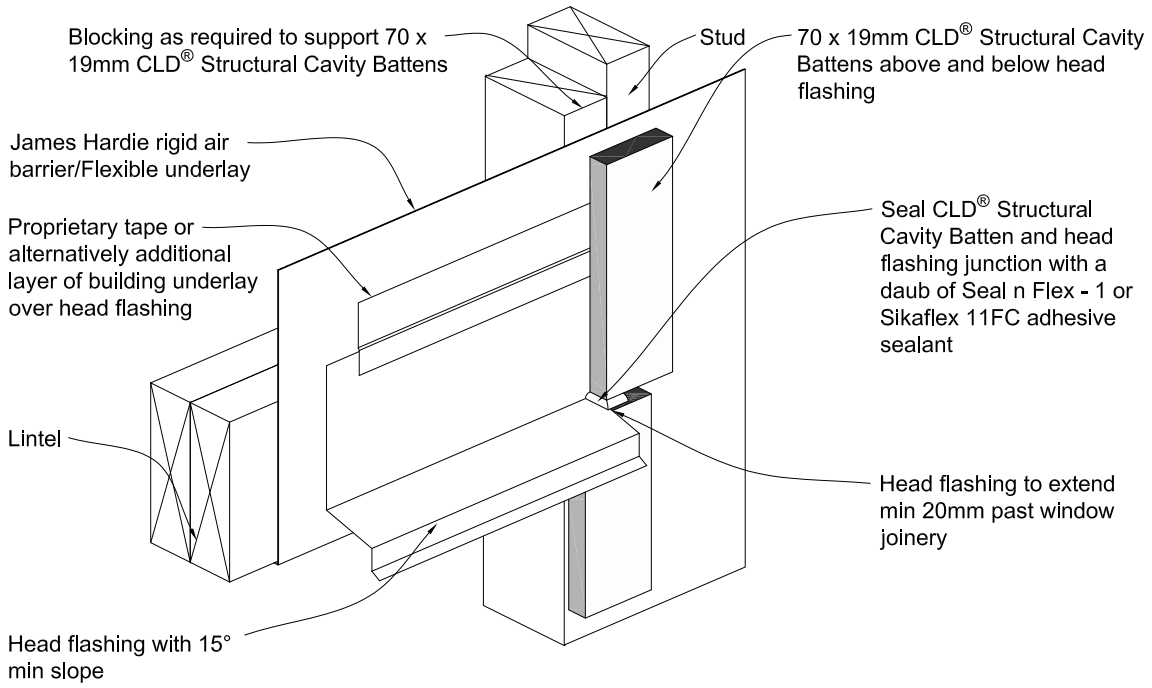

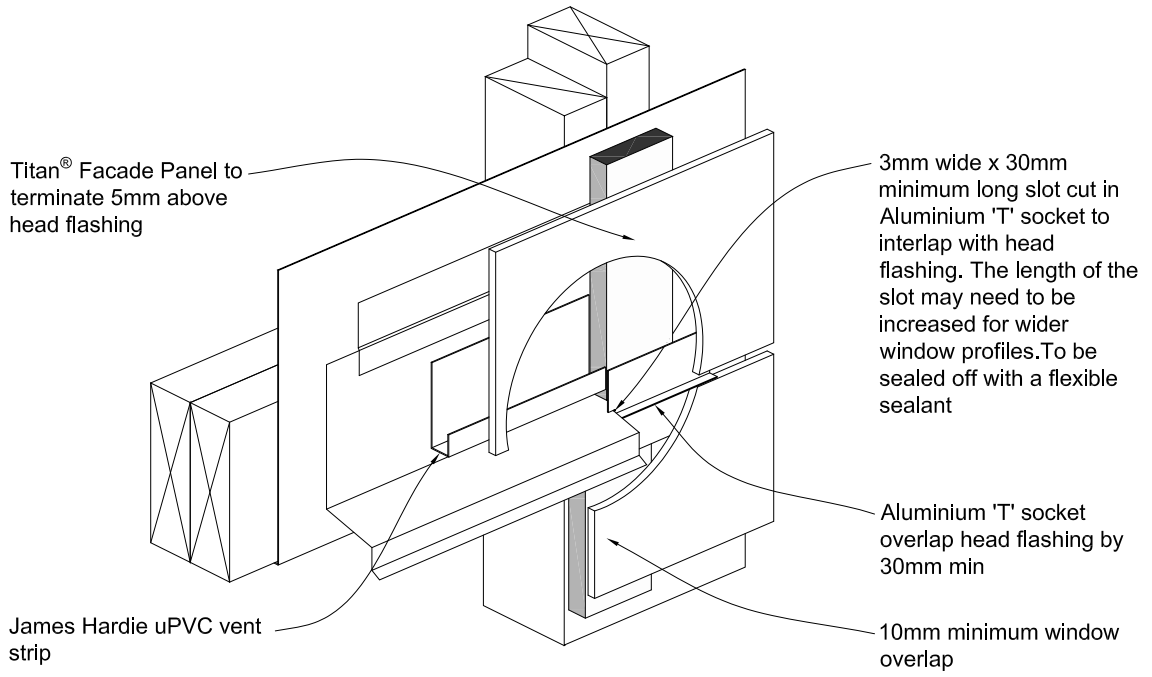

Figure 34: 'T' socket joint at window jamb

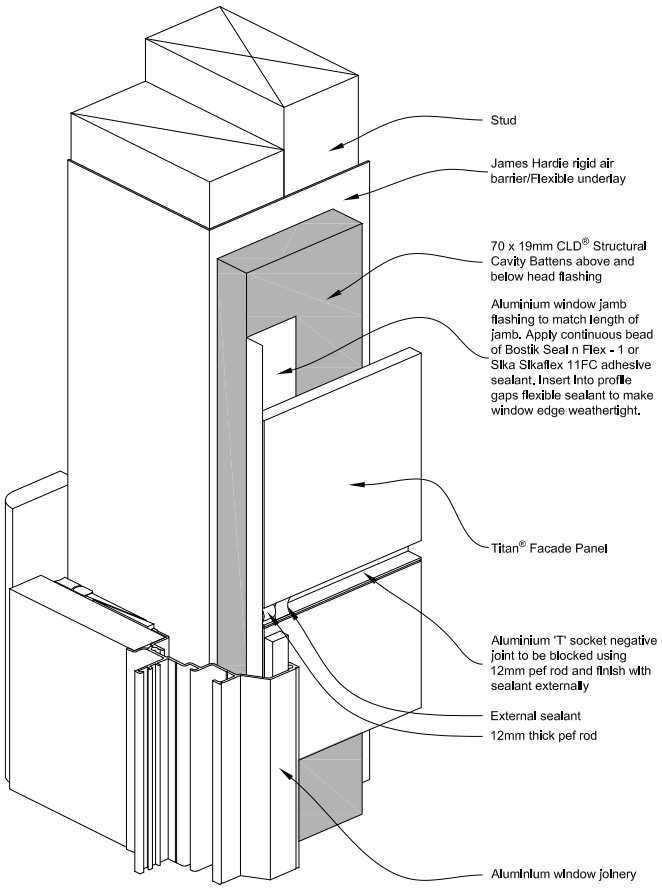

Figure 35: Cavity pipe penetration

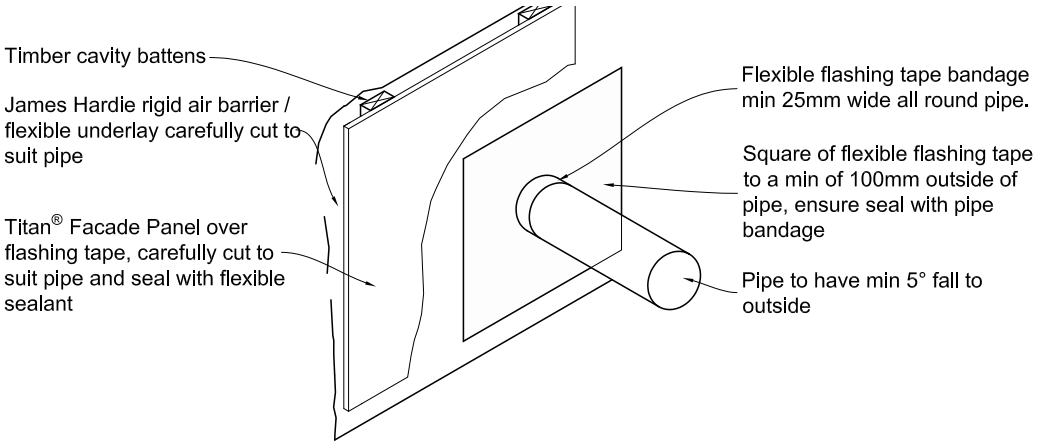

Product Warranty

Titan®
FACADE PANEL

January 2016

James Hardie New Zealand ("James Hardie") warrants for a period of 15 years from the date of purchase that the Titan® Façade Panel, RAB® Board and CLD® Structural Cavity Batten (the "Product"), will be free from defects due to defective factory workmanship or materials and, subject to compliance with the conditions below, will be resistant to cracking, rotting, fire and damage from termite attacks to the extent set out in James Hardie's relevant published literature current at the time of installation. James Hardie warrants for a period of 15 years from the date of purchase that the accessories supplied by James Hardie will be free from defects due to defective factory workmanship or materials.

Nothing in this document shall exclude or modify any legal rights a customer may have under the Consumer Guarantees Act or otherwise which cannot be excluded or modified at law.

CONDITIONS OF WARRANTY:

The warranty is strictly subject to the following conditions:

a) James Hardie will not be liable for breach of warranty unless the claimant provides proof of purchase and makes a written claim either within 30 days after the defect would have become reasonably apparent or, if the defect was reasonably apparent prior to installation, then the claim must be made prior to installation;

b) this warranty is not transferable;

c) the Product must be installed and maintained strictly in accordance with the relevant James Hardie literature current at the time of installation and must be installed in conjunction with the components or products specified in the literature. Further, all other products, including coating and jointing systems, applied to or used in conjunction with the Product must be applied or installed and maintained strictly in accordance with the relevant manufacturer's instructions and good trade practice;

d) the project must be designed and constructed in strict compliance with all relevant provisions of the current New Zealand Building Code ("NZBC"), regulations and standards;

e) the claimant's sole remedy for breach of warranty is (at James Hardie's option) that James Hardie will either supply replacement product, rectify the affected product or pay for the cost of the replacement or rectification of the affected product;

f) James Hardie will not be liable for any losses or damages (whether direct or indirect) including property damage or personal injury, consequential loss, economic loss or loss of profits, arising in contract or negligence or howsoever arising. Without limiting the foregoing James Hardie will not be liable for any claims, damages or defects arising from or in any way attributable to poor workmanship, poor design or detailing, settlement or structural movement and/or movement of materials to which the Product is attached, incorrect design of the structure, acts of God including but not limited to earthquakes, cyclones, floods or other severe weather conditions or unusual climatic conditions, efflorescence or performance of paint/coatings applied to the Product, normal wear and tear, growth of mould, mildew, fungi, bacteria, or any organism on any Product surface or Product (whether on the exposed or unexposed surfaces);

g) all warranties, conditions, liabilities and obligations other than those specified in this warranty are excluded to the fullest extent allowed by law;

h) if meeting a claim under this warranty involves re-coating of Products, there may be slight colour differences between the original and replacement Products due to the effects of weathering and variations in materials over time.

DISCLAIMER: The recommendations in James Hardie's literature are based on good building practice, but are not an exhaustive statement of all relevant information and are subject to conditions (c), (d), (f) and (g) above. James Hardie has tested the performance of the Titan® Façade Panel, RAB® Board and CLD® Structural Cavity Batten when installed in accordance with the Titan® Façade Panel and CLD® Cavity Batten technical specification, in accordance with the standards and verification methods required by the NZBC and those test results demonstrate the product complies with the performance criteria established by the NZBC. However, as the successful performance of the relevant system depends on numerous factors outside the control of James Hardie (e.g. quality of workmanship and design) James Hardie shall not be liable for the recommendations made in its literature and the performance of the relevant system, including its suitability for any purpose or ability to satisfy the relevant provisions of the NZBC, regulations and standards, as it is the responsibility of the building designer to ensure that the details and recommendations provided in the relevant James Hardie installation manual are suitable for the intended project and that specific design is conducted where appropriate.

Copyright January 2016. © James Hardie New Zealand. TM and ® denotes a Trademark or Registered Mark owned by James Hardie Technology Limited.

James Hardie
a smarter way™

Ask James Hardie™ | Call 0800 808 868 | jameshardie.co.nz

Copyright January 2016. © James Hardie New Zealand. TM and ® denotes a Trademark or Registered Mark owned by James Hardie Technology Limited.

BRANZ Appraised
Appraisal No.294 [2011]

BRANZ Appraisals

Technical Assessments of products for building and construction

BRANZ APPRAISAL No. 294 (2011)

This Appraisal replaces BRANZ Appraisal No. 294 (2009) issued 3 April 2009

Amended 8 December 2014

GIB EZYBRACE® SYSTEMS 2011

Winstone Wallboards Ltd
P O Box 12 256
Penrose
Auckland 1642

Tel: 09 633 0100
Fax: 09 633 0101
Helpline Tel: 0800 100 442
Helpline Fax: 0800 229 222
Web: www.gib.co.nz
Email: info@gib.co.nz

BRANZ
BRANZ Limited
Private Bag 50 908
Porirua City
New Zealand
Tel: +64 4 237 1170
Fax: +64 4 237 1171
www.branz.co.nz

WFTAO

Product

1.1 GIB EzyBrace® Systems 2011 are a range of wall and ceiling bracing systems based on the use of GIB Braceline®, GIB® Standard and other GIB® plasterboards. GIB EzyBrace® Systems are used to resist earthquake and wind loads on timber frame buildings designed and constructed in accordance with NZS 3604: 2011. The GIB EzyBrace® 2011 Software provides an electronic means of calculating bracing demand and resistance.

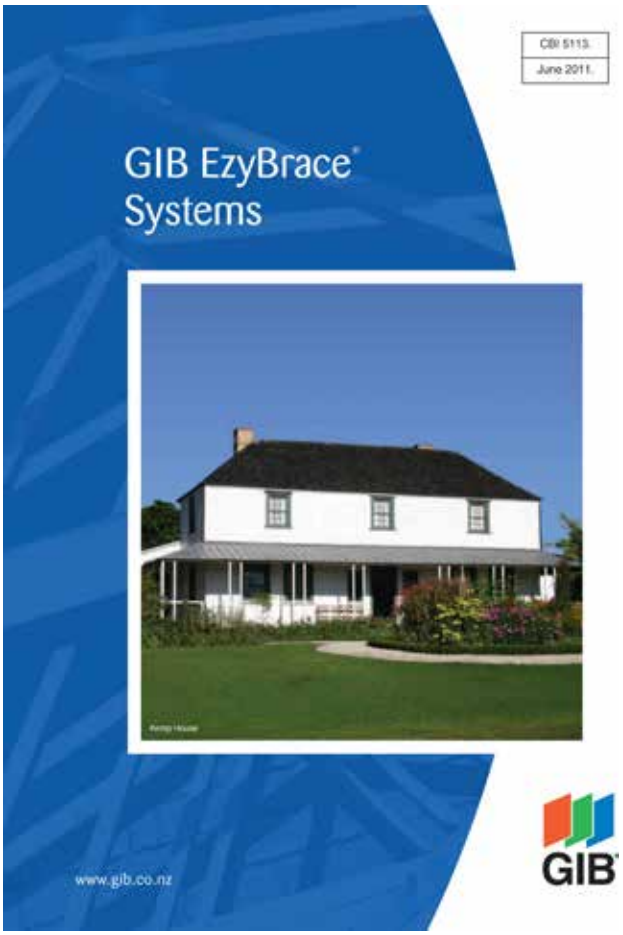

Scope

2.1 GIB EzyBrace® Systems 2011 and the GIB EzyBrace® 2011 Software have been appraised for the design and use of interior wall and ceiling bracing systems in buildings within the scope limitations of NZS 3604: 2011.

Building Regulations

New Zealand Building Code (NZBC)

3.1 In the opinion of BRANZ, the GIB EzyBrace® Systems 2011, if designed, used, installed and maintained in accordance with the statements and conditions of this Appraisal, will meet the following provisions of the NZBC:

Clause B1 STRUCTURE: Performance B1.3.1, B1.3.2 and B1.3.4. GIB EzyBrace® Systems meet the requirements for loads arising from self-weight, earthquake, wind and impact [i.e. B1.3.3 (a), (f), (h) and (j)]. See Paragraphs 8.1 - 8.10.

Clause B2 DURABILITY: Performance B2.3.1 (a) not less than 50 years. GIB EzyBrace® Systems meet this requirement. See Paragraphs 9.1 - 9.4.

Clause F2 HAZARDOUS BUILDING MATERIALS: Performance F2.3.1. GIB EzyBrace® Systems meet this requirement and will not present a health hazard to people.

3.2 The bracing demand calculation and bracing distribution rules published in the GIB EzyBrace™ Systems 2011 Technical Literature are in accordance with Section 5 of NZS 3604: 2011. Bracing resistance is provided by bracing element ratings determined in accordance with NZS3604: 2011 Paragraph 8.3.1.2.

Readers are advised to check the validity of this Appraisal by referring to the Valid Appraisals listing on the BRANZ website, or by contacting BRANZ.

3.3 NZS3604: 2011 is an **Acceptable Solution** for compliance with New Zealand Building Code Clause B1 Structure.

Technical Specification

4.1 The GIB® plasterboards and accessories used with the GIB EzyBrace® Systems and supplied or specified by Winstone Wallboards Ltd are as follows:

GIB® Plasterboards

- **GIB Braceline®**

GIB Braceline® is a high-density fibreglass reinforced paper-bound gypsum-plaster core sheet lining material. GIB® Braceline® is available in 10 mm and 13 mm thicknesses. The sheets have a taper on the two long sheet edges. GIB Braceline® has a sheet width of 1200 mm and 1350 mm, and is available in lengths of 2400 mm, 2700 mm, 3000 mm, 3600 mm and 4800 mm. The nominal weights are 9 kg/m^2 and 12.5 kg/m^2 for 10 m and 13 m thick sheets respectively. GIB Braceline® face paper is a light blue in colour.

- **GIB® Standard Plasterboard**

GIB® Standard plasterboard is a paper-bound fibreglass reinforced gypsum-plaster core sheet lining material. GIB® Standard plasterboard is available in 10 mm and 13 mm thicknesses and a sheet width of 1200 mm and 1350 mm (GIB® Wideline). The sheets have a taper on the two long sheet edges. The 10 mm thick sheets are also available with a square edge. Sheets are available in various lengths from 2400 mm to 6000 mm. The nominal weights are 6.5 kg/m^2 and 8.5 kg/m^2 for 10 mm and 13 mm thick sheets respectively. GIB® Standard plasterboard face paper is a light buff colour.

4.2 In specific situations, as specified in the Technical Literature, substitution is permitted with GIB Fyreline®, GIB Toughline®, GIB Aqualine®, GIB Ultraline®, GIB Ultraline® PLUS and GIB® Superline™.

Fastenings

- GIB Grabber® Drywall screws for fixing to timber:
  6g x 32 mm.
- GIB Nail:
  30 x 2.8 mm.
- GIB Braceline® Nail:
  35 mm long.
- GIB Grabber® screws for fixing light gauge steel battens:
  8g x 32 mm.

Ceiling Diaphragms

4.3 Ceiling diaphragms are constructed using timber framing, or GIB® Rondo®, or similar metal ceiling batten systems. The perimeter of the ceiling diaphragm is fixed to GIB® Rondo® perimeter channel, or alternatively, to an additional ex 150 x 40 mm timber plate fixed to the top plate.

Adhesive and Sealants

- GIBFix® One (Acrylic).
- GIBFix® All-Bond (Solvent).

GIB® Accessories and GIB® Jointing Compounds

- As specified in the GIB® Site Guide Technical Literature.

Plywood

- Plywood must be a minimum of 7 mm thick complying with AS/NZS 2269 D-D Grade Structural.
- Plywood fixings are 50 x 2.5 mm hot-dipped galvanised or stainless steel flat-head nails.

Fasteners, braces and connections

- GIB® HandiBrac®, galvanised steel 90 x 62 x 54 x 1.55 mm thick angle bracket.
- GIB® HandiBrac® Washer, 50 x 60 x 5 mm thick electroplated.
- GIB® HandiBrac® Fixings, 8 Type 17 screws 5 x 35 mm.
- Coach screws 12 mm x 150 mm and 50 x 50 x 3 mm washer hot-dipped galvanised for fixing to timber floors.
- Cast-in bolts M12 x 150 mm minimum and 50 x 50 x 3 mm washers for fixing to concrete floors. Proprietary fixings with a minimum characteristic strength of 15kN may be used.
- Shot fired fasteners minimum 75 mm x 3.8 mm with 16 mm discs for fixing GS1-N and GS2-N internal line bracing elements to concrete slabs.
- Galvanised or stainless steel strap 25 x 0.9 mm top and bottom plate connections.
- Strap fixings 30 x 2.5 mm hot-dipped galvanised or stainless steel flat-head nails.

Note: For corrosion protection requirements refer to NZS 3604: 2011 Section 4.

Handling and Storage

5.1 The best results are achieved when GIB® plasterboards are treated as a finishing material and protected from damage. Sheets must be stacked flat and kept dry at all times. For limits on stack heights see the GIB® Site Guide. Sheets must be carried on edge and not dragged.

5.2 All accessories must be kept dry.

Technical Literature

6.1 Refer to the Appraisals listing on the BRANZ website for details of the current Technical Literature for GIB EzyBrace® Systems. The Technical Literature must be read in conjunction with this Appraisal. All aspects of design, use, installation and maintenance contained in the Technical Literature and within the scope of this Appraisal must be followed.

Design Information

General

7.1 The GIB EzyBrace® Systems Technical Literature contains design procedures and a manual calculation method for bracing demand calculated in accordance with NZS 3604: 2011 Section 5. Refer to NZS 3604: 2011 Bracing Demand Tables 5.5 - 5.10 for 2 kPa floor loads and Tables 14.1 - 14.3 for 3 kPa floor loads. The tabulated BU/m ratings given in Table 1 of this Appraisal are for manual calculations and are conservative and have been rounded. The Technical Literature provides methods to distribute the bracing units in walls to resist forces in order to meet the requirements of NZS 3604: 2011 and a method for modifying the wall bracing demand for alternative wall heights. The use of ceiling diaphragms is also defined in the Technical Literature.

GIB EzyBrace® Software

7.2 GIB EzyBrace® 2011 Software has been assessed as part of this Appraisal.

7.3 The bracing demand calculations contained in the GIB EzyBrace® 2011 Software are based on first principles engineering and calculate wind and earthquake demand based on the building parameters entered. Resulting bracing demand calculations are project specific and can differ from values derived using NZS 3604: 2011 wind and earthquake demand tables. The BU/m ratings for various GIB EzyBrace® 2011 Systems embedded in the software increase with wall length and are higher than those given in Table 1 of this Appraisal.

7.8 Joints in the top plates of bracing panels must be tied together with 3 kN and 6 kN top plate connectors using 25 x 0.9 mm galvanised mild steel strap, 3 nails each side of joint for 3 kN and 6 nails each side of joint for 6 kN.

7.9 On occasions, properties additional to bracing may be required of the plasterboard lining. Table 2 gives permitted GIB® plasterboard substitutions.

Table 1: GIB® EzyBrace® Systems 2011 Bracing Ratings

Type	Minimum length (m)	Lining	Other Requirements	BU/M	
				W	EQ
GIB® Standard Plasterboard Systems					
GS1-N	0.4	GIB® Standard Plasterboard one side	n/a	50	55
	1.2			70	60
GS2-N	0.4	GIB® Standard Plasterboard both sides		70	65
	1.2			95	85
GSP-H	0.4	GIB® Standard Plasterboard one side, plywood the other	Panel hold-downs	100	115
	1.2			150*	150*
GIB Braceline® Systems					
BL1-H	0.4	GIB Braceline® one side	Panel hold-downs	90	100
	1.2			125*	105
BLG-H	0.4	GIB Braceline® one side, GIB® Standard Plasterboard the other		110	115
	1.2			150*	145*
BLP-H	0.4	GIB Braceline® one side, plywood the other		120	135*
	1.2			150*	150*

Notes:
Where linings are specified on both faces, each face must be fastened as a bracing element.
** **Timber Floors** - A limit of 120 BU/m applies to NZS 3604: 2011 timber floors.*

7.4 GIB EzyBrace® Systems 2011 are for use in dry, internal situations only.

7.5 GIB® Plasterboards must not be exposed to temperatures of 52°C or greater for prolonged periods. Refer to appliance and fitting manufacturers for installation details.

Framing

7.6 Timber framing grade, spacing and construction must comply with NZS 3604: 2011. Framing timber must be treated as required by NZBC Acceptable Solution B2/AS1.

7.7 GIB EzyBrace® Systems 2011 Technical Literature recommends the use of kiln-dried stress-graded framing timber. The minimum actual framing dimensions are 90 x 35 mm for external walls and 75 x 45 mm for internal walls.

Structure

Bracing

8.1 The bracing units achieved (wind and earthquake) published for manual calculations in GIB EzyBrace® Systems 2011 are given in Table 1.

8.2 The bracing unit ratings embedded in the GIB EzyBrace® 2011 Software are less conservative and vary with wall length.

8.3 The GIB EzyBrace® Systems 2011 Technical Literature provides comprehensive construction and panel hold-down details. These include bottom plate fixings using bolts (concrete) or coach screws (timber) and the GIB® HandiBrac™ or nailed stud-to-plate straps.

8.4 The bracing units are derived from BRANZ P21 test method based on a wall height of 2.4 m. For greater wall heights the bracing rating is calculated by multiplying the appropriate value shown in Table 1 by a factor f=2.4 and divided by the wall height in metres. Walls lower than 2.4 m shall be rated as if they were 2.4 m high.

Table 2: Permitted Substitutions in Gib EzyBrace® Systems

PERMITTED GIB® PLASTERBOARD SUBSTITUTIONS IN GIB EZYBRACE® SYSTEMS									
GIB Ezybrace® Systems have been designed and tested using only the products specified. Occasionally additional properties may be required to be provided by a different GIB® Plasterboard product. The following table provides acceptable substitution options.									
Specified	**Permitted alternative GIB® Plasterboard products**								
	GIB® Standard	**GIB Ultraline®**	**GIB Braceline/ Noiseline®**	**GIB Aqualine®**	**GIB Toughline® and GIB® Superline™.**	**GIB Fyreline®**			
						10mm	**13mm**	**16mm**	**19mm**
GIB® Standard	N/A	✓	✓	✓	✓	✓	✓ NOTE 2		
GIB Braceline®	X	X	N/A	✓ NOTE 1	✓	X	✓ NOTES 1 and 2		

NOTE 1: The element must be 900 mm or longer. Use 32mm x 6g GIB® Grabber® drywall screws at **100 mm** centres to the perimeter of the bracing element. The bracing corner fastening pattern applies to all four corners of the element. Panel hold-down fixings are required.

NOTE 2: The fastener type and length and must be as required for the relevant FRR system but the fixing patter must be as required for bracing elements.

Ceiling Diaphragms

8.5 GIB® ceiling diaphragms are used to space bracing lines further apart than 6 m. The basic shape of a ceiling diaphragm must be square or rectangular and the length must not exceed twice the width.

8.6 For ceiling diaphragms not steeper than 15º and not exceeding 7.5m in length, any GIB® Plasterboard may be used provided the perimeter fixing is at 150 mm centres.

8.7 For ceiling diaphragms not steeper than 45º and not exceeding 7.5m in length, and for diaphragms not steeper than 25º and not exceeding 12 m in length, any GIB® Plasterboard may be used provided the perimeter fixing is at 100 mm centres.

Openings in Bracing Elements

8.8 Openings are allowed within the middle third of bracing elements (length and height walls, length and width ceilings). The opening dimension in either direction must not exceed one third of the element height (width). Small openings of 90 x 90 mm or less may be placed anywhere except within 90 mm of the edge of the bracing element.

Water-splash Areas

8.9 GIB EzyBrace® Systems 2011 must not be located in shower cubicles or behind baths and the like. GIB EzyBrace® Systems 2011 may be used in water-splash areas provided they are protected as required by NZBC Clause E3.

Impact Resistance

8.10 GIB® plasterboards provide adequate resistance to soft body impact, based upon experience of use in domestic and light commercial applications.

Durability

9.1 GIB EzyBrace® Systems 2011, including linings and their fixings have a serviceable life of at least 50 years. The ability of the systems to remain durable is dependent on them remaining dry in service, and being maintained in accordance with this Appraisal.

Maintenance

9.2 The building must be maintained weatherproof and GIB® Plasterboard must be protected from external and internal moisture in accordance with NZBC Clauses E2 and E3.

9.3 Holes resulting from damage to the lining, up to 100 x 100 mm square, will have no significant effect on the performance of the bracing panel. Such holes may be repaired by patching, stopping and finishing as appropriate. Independent expert advice must be sought to assess the effect and repair of larger areas of damage.

9.4 Bracing elements require no ongoing maintenance, apart from decoration and the repair of any damage.

Prevention of Fire Occurring

10.1 Separation or protection must be provided to GIB Plasterboard from heat sources such as fire places, heating appliances, flues and chimneys. Part 7 of NZBC Acceptable Solutions C/AS1 – C/AS6 and NZBC Verification Method C/VM1 provide methods for separation and protection of combustible materials from heat sources.

Fire Affecting Areas Beyond the Fire Source

11.1 10 mm and 13 mm GIB Braceline® may substitute for 10 mm and 13 mm GIB Fyreline® respectively in all fire resistant wall construction. Refer to GIB® Fire Rated Systems Technical Literature.

Internal Moisture

12.1 GIB® Plasterboard must be used in dry internal situations, and must not be used where likely to be exposed to liquid water, or where extended exposure to humidity above 90% RH is expected, e.g., such as may be expected in sauna rooms, commercial kitchens and the like.

Installation Information

Installation Skill Level Requirement

13.1 Installation of GIB EzyBrace® Systems 2011 can be carried out by any competent building contractor.

General

14.1 GIB EzyBrace® Systems 2011 must be installed in accordance with the Technical Literature. For inspection, reference must be made to the Technical Literature.

Cutting

14.2 GIB® plasterboard is easily cut by scoring the face paper with a sharp short-bladed trimming knife, and then snapping the plasterboard away from the cut face and cutting the back paper or by sawing. Use of a metal straightedge facilitates clean straight cuts. Cut edges can be tidied up by using a knife. Paper dags should be removed.

Health and Safety

14.3 Dust resulting from the sanding of stopping and finishing compounds may be a respiratory irritant, and the use of a suitable facemask is recommended.

Framing

14.4 To achieve an acceptable decorative finish, the GIB® Site Guide specifies that walls must not be lined unless the moisture content of timber framing is less than 18%.

Hold-downs

14.5 GIB EzyBrace® Systems which require hold-downs must either have a GIB® Handibrac® fitted to each end of the bracing element or alternatively a metal stud-to-plate strap and hold-down anchor may be used. Refer to the Technical Literature for full installation details. Where a metal stud-to-plate strap is used, the hold-down anchor must be placed no more than 80 mm from the end of the bracing element.

Sheet Fixing

14.6 Corner fixings must be 50 mm away from the sheet corner. Fixings must be no closer than 12 mm from the paper-bound sheet edge, and no closer than 18 mm from a cut edge, and driven at right angles to the sheet until the head is seated in a slight dimple just below the surface of the paper liner. Fixings must not be over-driven.

14.7 GIB EzyBrace® System 2011 wall bracing plasterboards are fixed at 150 mm centres around the perimeter framing of the bracing element (Note variation for GIB Aqualine®). At the corners of the wall bracing elements, a special fastening pattern is required with fasteners spaced at 50 mm, 100 mm, 150 mm, 225 mm and 300 mm from the corner and there-after at 150 mm centres. Fixing to other framing is either mechanical or by using GIBFix® Adhesives.

14.8 Where GIB Aqualine® substitutes for GIB Braceline®, bracing elements must be longer than 900 mm and the bracing element perimeter fasteners must be spaced at 100 mm centres and the corner pattern described in Paragraph 14.7 used.

14.9 All GIB EzyBrace® System 2011 ceiling diaphragms require fixings around the perimeter at 100 or 150 mm centres, depending on the ceiling pitch and length. See Paragraphs 8.4 to 8.6 and refer to the Technical Literature.
14.10 The GIB EzyBrace® Systems 2011 requirements for horizontal or vertical sheet installation must be met. Full sheets must be used wherever possible.
14.11 Plywood is nail fixed at 150 mm centres around the perimeter of each sheet and at 300 mm centres to intermediate framing.
14.12 Where a bracing element is also used as a fire-rated element, the method of fixing (including the length of the fixing specified) for the fire-rated element must be used, but the perimeter fixings of the bracing element must be at 150 mm centres and fixings at corners of the bracing element must be fixed as described in Paragraph 14.6. In two-layer systems the inner layer must be used for bracing.

Jointing and Finishing

14.13 All bracing element joints must be reinforced with paper tape and finished in accordance with the GIB® Site Guide.

Basis of Appraisal

The following is a summary of the technical investigations carried out:

Tests

15.1 Bracing tests were carried out by Winstone Wallboards Ltd and BRANZ in accordance with BRANZ Technical Paper P21 to determine the performance of GIB EzyBrace® Systems 2011 when the building is subjected to lateral wind or earthquake loading. Nail and screw slip tests were carried out by BRANZ and Winstone Wallboards Ltd. The Winstone Wallboard's test facilities, procedures and results have been reviewed by BRANZ and found to be satisfactory.

Other Investigations

16.1 The GIB EzyBrace® 2011 Software has been assessed by BRANZ and found to be satisfactory.
16.2 The GIB EzyBrace® Systems 2011 and GIB® Site Guide Technical Literature have been examined by BRANZ and found to be satisfactory.
16.3 Site visits were carried out by BRANZ to assess the practicability of the installation of the systems, and to view completed installations.
16.4 An assessment was made of the durability of the systems by BRANZ technical experts and found to be satisfactory.
16.5 The properties of Winstone Wallboards Ltd GIB® plasterboards have been assessed for the following properties: MOR, MOE, paper tensile strength, paper shear strength, nail pull resistance, Hunter hardness, inspection for fungal spores, hard and soft body impact tests.

Quality

17.1 Winstone Wallboards Ltd's manufacturing process and details of the quality and composition of the materials, have been examined by BRANZ and found to be satisfactory.
17.2 The quality management systems of Winstone Wallboards Ltd have been assessed and registered by TELARC as meeting the requirements of ISO 9001, Registration No. 581.
17.3 Winstone Wallboards Ltd is responsible for the quality of the product supplied.
17.4 The quality of the application and finish on site is the responsibility of the installation and stopping contractors.
17.5 Designers are responsible for the design of buildings.
17.6 Building owners are responsible for the maintenance in accordance with the instructions of Winstone Wallboards Ltd.

Sources of Information

- AS/NZS 2269: 2008 Structural plywood.
- AS/NZS 2588: 1998 Gypsum plasterboard.
- BRANZ Technical Paper P21: 2010 A wall bracing test and evaluation procedure.
- NZS 3604: 2011 Timber-framed buildings.
- Ministry of Business, Innovation and Employment Record of Amendments for Compliance Documents and Handbooks.
- The Building Regulations 1992.

In the opinion of BRANZ, GIB EzyBrace® is fit for purpose and will comply with the Building Code to the extent specified in this Appraisal provided it is used, designed, installed and maintained as set out in this Appraisal.
The Appraisal is issued only to Winstone Wallboards Ltd, and is valid until further notice, subject to the Conditions of Appraisal.

Conditions of Appraisal

1. This Appraisal:
a) relates only to the product as described herein;
b) must be read, considered and used in full together with the technical literature;
c) does not address any Legislation, Regulations, Codes or Standards, not specifically named herein;
d) is copyright of BRANZ.
2. Winstone Wallboards Ltd:
a) continues to have the product reviewed by BRANZ;
b) shall notify BRANZ of any changes in product specification or quality assurance measures prior to the product being marketed;
c) abides by the BRANZ Appraisals Services Terms and Conditions.
d) Warrants that the product and the manufacturing process for the product are maintained at or above the standards, levels and quality assessed and found satisfactory by BRANZ pursuant to BRANZ's Appraisal of the product.
3. BRANZ makes no representation or warranty as to:
a) the nature of individual examples of, batches of, or individual installations of the product, including methods and workmanship;
b) the presence or absence of any patent or similar rights subsisting in the product or any other product;
c) any guarantee or warranty offered by Winstone Wallboards Ltd.
4. Any reference in this Appraisal to any other publication shall be read as a reference to the version of the publication specified in this Appraisal.
5. BRANZ provides no certification, guarantee, indemnity or warranty, to Winstone Wallboards Ltd or any third party.

For BRANZ

P Burghout
Chief Executive

Date of issue: 30 June 2011

Amendment No. 1, dated 31 January 2012.
This Appraisal has been amended to update reference to NZS 3604: 2011.
Amendment No. 2, dated 8 December 2014.
This Appraisal has been amended to update clause changes as required by the introduction of NZBC Fire Clauses C1 – C6 Protection from Fire and A3 Building Importance Levels. The Appraisal has also been amended to update reference to timber treatment in accordance with NZBC Acceptable Solution B2/AS1. GIB® Superline™ has been added as a permitted substitution in GIB EzyBrace® Systems. Additional information is now provided on hold-downs - refer Paragraph 14.5. Finally, the Wind bracing rating for bracing system BLP-H of 0.4 m minimum length has been reduced to 120 BU/m from 135 BU/m.

BRANZ Appraised
Appraisal No.427 [2007]

BRANZ Appraisals

Technical Assessments of products for building and construction

BRANZ APPRAISAL No. 427 (2007)

Amended 31 January 2012

GIB AQUALINE® WET AREA SYSTEMS

Winstone Wallboards Limited
P O Box 12 256
Penrose
Auckland 1642

Tel: 09 633 0100
Fax: 09 633 0101
Helpline Tel: 0800 100 442
Helpline Fax: 0800 229 222
Web: www.gib.co.nz
Email: info@gib.co.nz

BRANZ

BRANZ Limited
Private Bag 50 908
Porirua City
New Zealand
Tel: +64 4 237 1170
Fax: +64 4 237 1171
www.branz.co.nz

WFTAO

Product

1.1 GIB Aqualine® Wet Area Systems are for the interior lining of timber and steel frame walls and ceilings in wet areas such as bathrooms, laundries, kitchens and toilets where a water resistant lining material is desirable.
1.2 GIB Aqualine® Wet Area Systems are based on 10 mm and 13 mm thick GIB Aqualine® water resistant plasterboard.

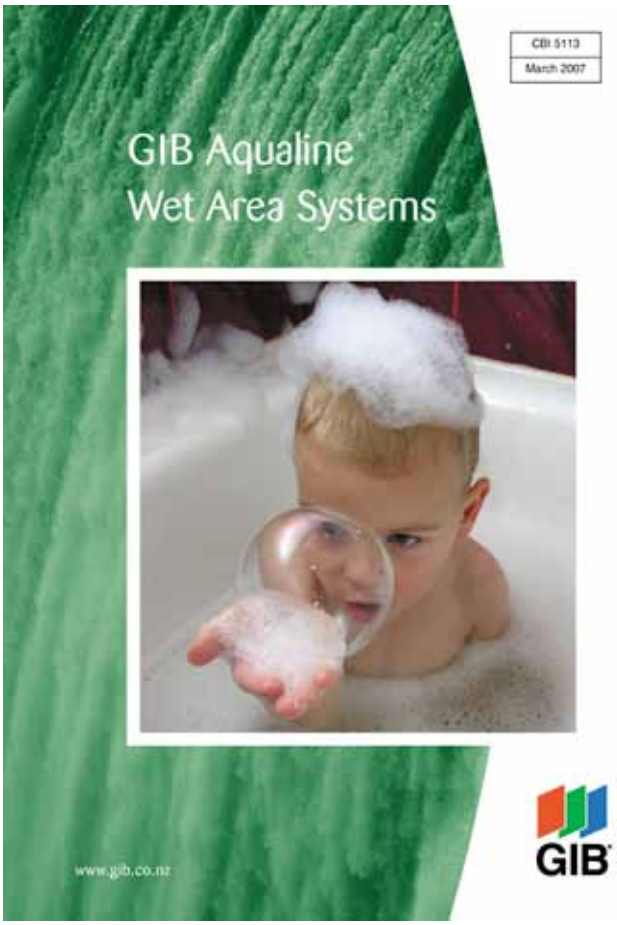

Scope

2.1 GIB Aqualine® Wet Area Systems have been appraised for use as a wet area wall and ceiling lining in buildings within the following scope:

- on framed walls and ceilings within the scope limitations on NZS 3604; and,
- on timber and light gauge steel framed walls and ceiling subject to specific design; and,

2.2 GIB Aqualine® may also be used to substitute for some other GIB® Plasterboards in fire-rated, sound-rated and bracing-rated wall and floor/ceiling constructions.

Building Regulations

New Zealand Building Code (NZBC)

3.1 In the opinion of BRANZ, the GIB Aqualine® Wet Area Systems, if designed, used, installed and maintained in accordance with the statements and conditions of this Appraisal, will meet or contribute to meeting the following provisions of the NZBC:
Clause B1 STRUCTURE: Performance B1.3.1, B1.3.2 and B1.3.4. GIB Aqualine® Wet Area Systems meet the requirements for loads arising from self-weight, earthquake, wind and impact [i.e. B1.3.3 (a), (f), (h) and (j)]. See Paragraphs 8.1 - 8.3.
Clause B2 DURABILITY: Performance B2.3.1 (a) not less than 50 years, B2.3.1 (b) 15 years and B2.3.1 (c) 5 years. GIB Aqualine® Wet Area Systems meet these requirements. See Paragraphs 9.1 - 9.5.

Readers are advised to check the validity of this Appraisal by referring to the Valid Appraisals listing on the BRANZ website, or by contacting BRANZ.

Clause C3 SPREAD OF FIRE: Performance C3.3.1, C3.3.2, and C3.3.5. GIB Aqualine® Wet Area Systems meet these requirements by providing passive fire and smoke protection.
Clause E3 INTERNAL MOISTURE: Performance E3.3.4, E3.3.5 and E3.3.6. GIB Aqualine® Wet Area Systems meet these requirements. See Paragraphs 13.1 - 13.3.
Clause F2 HAZARDOUS BUILDING MATERIALS: Performance F2.3.1. GIB Aqualine® Wet Area Systems meet this requirement and will not present a health hazard to people.
Clause G6 AIRBORNE AND IMPACT SOUND: Performance G6.3.1 and G6.3.2. GIB Aqualine® Wet Area Systems meet the requirements. See Paragraph 14.1.

3.2 This is an Appraisal of an **Alternative Solution** in terms of New Zealand Building Code compliance.

Technical Specification

4.1 The GIB® plasterboards and accessories used in the GIB Aqualine® Wet Area System and supplied or specified by Winstone Wallboards Limited are as follows:

GIB Aqualine®

4.2 GIB Aqualine® is a paper-bound, modified water-resistant gypsum-plaster core sheet lining material. The sheets have a taper on the two long sheet edges. GIB Aqualine® is available in 10 mm and 13 mm sheet thicknesses, a sheet width of 1200 mm and in lengths of 2400 mm, 2700 mm, 3000 mm and 3600 mm. The maximum weights are 7.8 kg/m^2 and 10.2 kg/m^2 for 10 mm and 13 mm thick sheets respectively. GIB Aqualine® face paper is green in colour.

Fastenings

- GIB® Grabber® High Thread Drywall screws for fixing to timber:
  6g x 25 mm and 32 mm.
- GIB® Grabber® Self Tapping Drywall screws for fixing to light gauge steel:
  6g x 25 mm and 32 mm.
- GIB® Nails
  30 mm and 40 mm x 2.8 mm

Adhesive and Sealants

- GIBFix® One (Acrylic)
- GIBFix® All-Bond (Solvent)

GIB® Accessories and GIB® Jointing Compounds

- As specified in the GIB Aqualine® Wet Area Systems and GIB® Site Guide Technical Literature.

Finishes

4.3 Finishes such as tiling, flexible sheet vinyl, paints and wallpapers have not been assessed and are outside the scope of this Appraisal.

Handling and Storage

5.1 The best results are achieved when GIB Aqualine® is treated as a finishing material and protected from damage. Sheets must be stacked flat and kept dry at all times. For limits on stack heights see the GIB® Site Guide. Sheets must be carried on edge and not dragged.
5.2 All accessories must be kept dry.

Technical Literature

6.1 Refer to the Appraisals listing on the BRANZ website for details of the current Technical Literature for the GIB Aqualine® Wet Area System. The Technical Literature must be read in conjunction with this Appraisal. All aspects of design, use, installation and maintenance contained in the Technical Literature and within the scope of this Appraisal must be followed.

Design Information

General

7.1 GIB Aqualine® provides a water-resistant lining as a base for finishing systems in wet areas such as bathrooms, toilets, laundries and kitchens. The typical finishes are ceramic tiles and flexible sheet vinyl to walls and paint, and wallpaper to walls and ceilings.
7.2 GIB Aqualine® must not be used in the following situations:

- For bracing applications in shower areas or adjacent baths (See Paragraphs 7.4 and 8.2).
- In areas of high humidity (above 90% RH) or continually wet such as group showers, steam rooms, or swimming pools.
- Installed over a vapour barrier.
- Applied directly to masonry, concrete or solid plaster.
- Applied over other sheet lining materials.
- Used externally of the building envelope.
- Exposed to temperatures of 52ºC or greater for prolonged periods. (Refer to appliance and fitting manufacturer's for installation details.)

7.3 GIB Aqualine® may be substituted for some other GIB® Plasterboard products in specific GIB® Bracing Systems, GIB® Fire Rated Systems, GIB® Noise Control Systems and GIB Ultraline® PLUS Lining System.

Wet Areas

7.4 Wet areas are spaces where sanitary fixture and sanitary appliances are located such as bathrooms, toilets, laundries and kitchens. There are two general categories of wet areas as follows:

1. Water Splash – These are areas subject to intermittent splashing of water such as around baths, vanities, tubs and sinks.
2. Shower Areas – These are areas subject to frequent and heavy water splash such as enclosed showers, unenclosed shower zones and showers over baths.

7.5 Both the above wet area categories must be finished with surfaces and joints that are impervious and easily cleaned. Shower areas must additionally be waterproof. This can be achieved using proprietary rigid shower lining systems, flexible vinyl shower wall finish, or tiling. Tiled shower areas must include a wet area waterproofing membrane system under the tiles.

Intertenancy Walls – Wet Areas

7.6 Intertenancy drywall constructions that incorporate fire resistance and noise control must be protected from water splash. In shower areas GIB Aqualine® must not be substituted for other GIB® Plasterboards but must be an extra lining layer. Refer to the GIB Aqualine® Wet Area Systems Technical Literature.

Tiling

7.7 GIB Aqualine® is suitable as a substrate for tiling up to the following weights:

- 10 mm GIB Aqualine® up to 20kg/m^2
- 13 mm GIB Aqualine® up to 32kg/m^2.

Note: Most ceramic and porcelain wall tiles weigh less than 20kg/m². For further information on tiling consult the BRANZ Good Practice Guide – Tiling.

Framing

7.8 Supporting framing must comprise one of the following subject to the minimum sizes, dwang centres and all other frame requirements of GIB Aqualine® Wet Area Systems Technical Literature:

- Timber framing must be designed and constructed in accordance with NZS 3604, or to a specific design using NZS 3603 and AS/NZS 1170.
- Steel framing must be designed to withstand loads in accordance with AS/NZS 1170.

Structure

Bracing

8.1 GIB Aqualine® can be used in place of GIB® Standard plasterboard in GIB® bracing elements. GIB Aqualine® can be used in place of GIB Braceline® in GIB® bracing elements 900 mm or longer, provided the perimeter of the element is fixed with GIB Braceline® Nails or GIB Braceline® screws at 100 mm centres, using the GIB Braceline® corner fixing pattern.

8.2 GIB Aqualine® must not be used for bracing in shower areas or behind baths.

Impact Resistance

8.3 GIB® plasterboards provide adequate resistance to soft body impact, based upon experience of use in domestic and light commercial applications.

Durability

Serviceable Life

9.1 GIB Aqualine® has a serviceable life of at least 15 years as a fully protected shower or water splash lining. As a general wall and ceiling lining GIB Aqualine® will have a serviceable life in excess of 50 years. The ability of GIB Aqualine® to remain durable is dependent on being protected and remaining dry in service, and being maintained in accordance with this Appraisal.

Maintenance

9.2 The building must be maintained weathertight and all lining systems protected from internal and external moisture.

9.3 Finishes to water splash and shower areas, including tiles, grout, waterproof membranes, sealants and flexible sheet vinyl must be checked to ensure the integrity of the system is maintained. They must be repaired or replaced if necessary. When repairing or replacing finishes, the GIB Aqualine® substrate must be checked for defects and repaired or replaced, as required.

9.4 For flexible sheet vinyl, particular attention must be paid to joints especially at corners. Checks should be made to ensure the vinyl has not been punctured. Where damage has occurred, repairs must be made immediately.

9.5 Impact damage to GIB Aqualine® plasterboard, resulting in small holes and cracks, may be patched, stopped and finished. For larger areas of damage, expert advice on repair must be sought from Winstone Wallboards Ltd.

Outbreak of Fire

10.1 Separation or protection must be provided to GIB Aqualine® Wet Area Systems from heat sources such as stoves, heaters, flues and chimneys.

10.2 NZBC Acceptable Solution C/AS1, Part 9 and Verification Method C/VM1 provide methods for separation and protection of combustible materials from heat sources.

Spread of Fire

11.1 When 10 mm GIB Aqualine® is substituted into fire rated systems in place of 10 mm GIB Fyreline®, the FRR of that system will be maintained. Similarly, the FRR is maintained when 13 mm GIB Aqualine® is substituted for 13 mm GIB Fyreline®.

Flame Barrier

12.1 Where flame barriers are required by Acceptable Solution C/AS1 Table 6.3, GIB Aqualine® is a suitable material to provide a 10 minute flame barrier, provided all sheet joints are formed over framing, or backblocked with GIB® plasterboard.

Internal Moisture

13.1 When installed in accordance with this Appraisal, GIB Aqualine® Wet Area Systems will provide wall surfaces adjacent to sanitary fixtures and sanitary appliances that are impervious and easily cleaned.

13.2 The construction methods meet with the internal moisture requirements of the NZBC Acceptable Solution E3/AS1.

13.3 To minimise internal condensation, adequate levels of ventilation and thermal resistance must be provided to all spaces where moisture may be generated.

Airborne and Impact Sound

14.1 When GIB Aqualine® is substituted into GIB® Noise Control systems in place of the equivalent thickness GIB® Standard plasterboard or GIB Fyreline®, the STC and IIC rating of that system will be maintained. When GIB Aqualine® is substituted in place of the equivalent thickness GIB Noiseline®, a small performance loss may occur.

Installation Information

Installation Skill Level Requirement

15.1 Installation of GIB Aqualine® Wet Area Systems can be carried out by any competent building contractor.

General

16.1 GIB Aqualine® Wet Area Systems must be installed in accordance with the Technical Literature. For inspection, reference must be made to the Technical Literature.

Cutting

16.2 GIB Aqualine® is easily cut by scoring the face paper with a sharp short-bladed trimming knife, and then snapping the plasterboard away from the cut face and cutting the back paper or by sawing. Use of a metal straightedge facilitates clean straight cuts. Cut edges can be tidied up by using a knife. Paper dags should be removed.

Health and Safety

16.3 Dust resulting from the sanding of stopping and finishing compounds may be a respiratory irritant, and the use of a suitable facemask is recommended.

Framing

16.4 To achieve an acceptable decorative finish, GIB Aqualine® Wet Area Systems and the GIB® Site Guide specifies that walls must not be lined unless the moisture content of timber framing is less than 18%. Winstone Wallbaords Limited recommend a moisture content of 8–12% where buildings are to be air conditioned or centrally heated.

Fixing Sheets

Non-Tiled Areas

17.1 GIB Aqualine® sheets may be installed vertically or horizontally. Sheets are fixed with GIB® Grabber® screws or GIB® Nails at 300 mm centres around the perimeter of the sheet, and with GIBFix® adhesive on all intermediate studs and dwangs. Adhesive must not be used under fasteners. A 5-10 mm gap must be left between the floor and the bottom of the sheet.

Tiled Areas

17.2 Control joints must be provided at maximum 4 m centres.

Internal corners in shower areas must be reinforced with a minimum 32 x 32 x 0.55 mm galvanised metal angle prior to lining the walls.

17.3 GIB Aqualine® sheets may be installed vertically or horizontally. Sheets are fixed with GIB® Grabber® screws at 100 mm centres to perimeter of wall and to all intermediate studs. Adhesive must not be used in place of screws.

Ceilings

17.4 Supports of timber or steel battens or ceiling joists must be 450 centres for 10 mm GIB Aqualine®, or 600 mm centres for 13 mm GIB Aqualine®.

17.5 GIB Aqualine® sheets must be fixed with GIB® Grabber® screws at 600 mm centres around perimeter and at 200 mm centre along supports. Alternatively, sheets are screw fixed at 600 mm centres along the supports and GIBFix® adhesive fixed at 200 mm centre between.

Penetrations and Sealants

18.1 All cut-outs for pipe penetrations must be made neatly using a hole saw. Cut-outs should be made approximately 12 mm diameter greater than the pipe.

18.2 A bead of silicone sealant must be placed to the full thickness of the GIB Aqualine® sheet around all pipe penetrations, at bath rims and preformed shower bases and where an impervious junction is required at the floor/wall line.

18.3 In tiled areas, a bead of silicone sealant 6 mm wide must also be placed to the full thickness of the tiles where the above situation occurs. The sealant manufacturer's technical literature must be followed for installation.

Jointing and Finishing

19.1 Jointing must be carried out in accordance with GIB® Site Guide Technical Literature.

19.2 Tiled shower areas must incorporate a waterproofing membrane over GIB Aqualine®. Waterproofing membranes are outside the scope of this Appraisal and must otherwise be specified and approved.

Investigations

20.1 The GIB Aqualine® Wet Area Systems and GIB® Site Guide Technical Literature have been examined by BRANZ and found to be satisfactory.

20.2 Site visits were carried out by BRANZ to assess the practicability of the installation of the systems, and to view completed installations.

20.3 An assessment was made of the durability of the systems by BRANZ technical experts and found to be satisfactory.

20.4 Winstone Wallboards Limited GIB® plasterboards have been assessed for the following properties: MOR, MOE, paper tensile strength, paper shear strength, nail pull resistance, Hunter hardness, inspection for fungal spores, hard and soft body impact tests.

Quality

21.1 Winstone Wallboards Limited's manufacturing process and details of the quality and composition of the materials, have been examined by BRANZ and found to be satisfactory.

The quality management systems of Winstone Wallboards Limited have been assessed and registered by TELARC as meeting the requirements of ISO 9001, Registration No. 581.

Winstone Wallboards Limited is responsible for the quality of the product supplied.

21.2 The quality of the application and finish on site is the responsibility of the installation, stopping and finishing contractors.

21.3 Designers are responsible for the design of buildings.

21.4 Building owners are responsible for the maintenance in accordance with the instructions of Winstone Wallboards Limited.

Sources of Information

- AS/NZS 1170: 2002 Structural design actions.
- AS/NZS 2588: 1998 Gypsum Plasterboard.
- NZS 3602: 2003 Timber and wood-based products for use in building.
- NZS 3603: 1993 Timber structures standard.
- NZS 3604: 2011 Timber-framed buildings.
- BRANZ Good Practice Guide - Tiling, March 2004.
- New Zealand Building Code Handbook and Approved Documents, Building Industry Authority, 1992.
- The Building Regulations 1992, up to, and including October 2004 Amendment.

In the opinion of BRANZ, GIB Aqualine® Wet Area Systems are fit for purpose and will comply with the Building Code to the extent specified in this Appraisal provided they are used, designed, installed and maintained as set out in this Appraisal.

The Appraisal is issued only to the Client, Winstone Wallboards Limited, and is valid until further notice, subject to the Conditions of Appraisal.

Conditions of Appraisal

1. This Appraisal:
   a) relates only to the product as described herein;
   b) must be read, considered and used in full together with the technical literature;
   c) does not address any Legislation, Regulations, Codes or Standards, not specifically named herein;
   d) is copyright of BRANZ.
2. The Client:
   a) continues to have the product reviewed by BRANZ;
   b) shall notify BRANZ of any changes in product specification or quality assurance measures prior to the product being marketed;
   c) abides by the BRANZ Appraisals Services Terms and Conditions.
3. The product and the manufacture are maintained at or above the standards, levels and quality assessed and found satisfactory by BRANZ.
4. BRANZ makes no representation as to:
   a) the nature of individual examples of, batches of, or individual installations of the product, including methods and workmanship;
   b) the presence or absence of any patent or similar rights subsisting in the product or any other product;
   c) any guarantee or warranty offered by the Client.
5. Any reference in this Appraisal to any other publication shall be read as a reference to the version of the publication specified in this Appraisal.

For BRANZ

P Robertson
Chief Executive

Date of issue: 4 April 2007

Amendment No. 1, dated 29 April 2010.
This Appraisal has been amended to include a new adhesive, GIBFix® One, and to update reference to AS/NZS 1170.
Amendment No. 2, dated 31 January 2012.
This Appraisal has been amended to update reference to NZS 3604: 2011.

Calder Stewart Roofing

Corrugate

Table of Contents

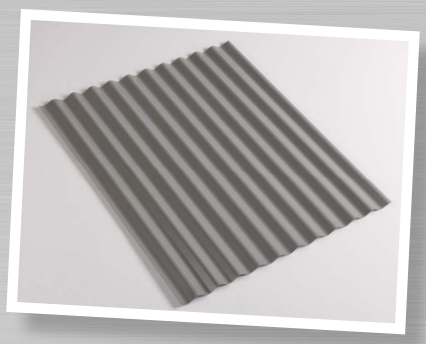

Technical Drawing File Downloads

formats available

AutoDesk DWG Format

AutoDesk RVT Format

PDF Format

General Profile Information	2
Material Specifications Table: Corrugate	3
Span Table: Corrugate	4
Lengths	4
Flashings	4
Colour Availability	5
Fastenings: Corrugate	6
Purlin Placement Table	6
Roof Fastener Layout Options	7
Technical Drawings	8
R-001-01 Profile Detail	8
R-001-02 Eave Detail (Soffit)	9
R-001-03 Eave Detail (No Soffit)	10
R-001-04 Head Barge Detail	11
R-001-05 Ridge Detail	12
R-001-06 Vented Ridge Detail	13
R-001-07 Barge Detail (Soffit)	14
R-001-08 Barge Detail (No Soffit)	15
R-001-09 Apron Detail (Transverse)	16
R-001-10 Apron Detail (Parallel)	17
R-001-11 Valley Gutter Detail	18
R-001-12 Hidden Gutter Detail	19
R-001-13 Internal Gutter Detail	20
R-001-14 Parapet Detail	21
R-001-15 Change in Pitch Detail	22
R-001-16 Roof Step Detail	23
R-001-17 Hip Detail	24
R-001-18 Dormer Detail	25
R-001-19 Small Penetration Detail (Cylindrical)	26
R-001-20 Large Penetration Detail (Cylindrical)	27
R-001-21 Large Penetration Detail (Rectangular)	28
Contact Calder Stewart Roofing	29

Visit Calder Stewart Roofing on the Web

www.roofer.co.nz

© Calder Stewart Roofing - Profile Data Sheets - Published: 11/2015

General Profile Information

R-001 Corrugate

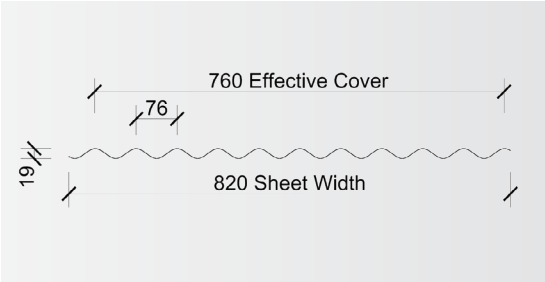

A Popular New Zealand Roofing & Cladding Choice

applications

Residential
Commercial
Wall Cladding

From traditional to contemporary, Calder Stewart Roofing's corrugate profile can complement most designs. Versatile as both a roofing and cladding profile – Corrugate has been used by architects and builders in any number of ways – including roofing, external & interior cladding and ceilings applications. Available in a wide range of materials and material finishes - including ColorCote® and Precious Metal options.

Specifications: Corrugate

BMT	Min Pitch	Max Span (Internal)	Max Span (End)	Weight / Metre
0.40mm	8°	1.10	0.70	3.10
0.55mm	8°	1.60	1.00	4.27
0.70mm Alu	8°	0.80	0.50	1.84
0.90mm Alu	8°	1.20	0.80	2.37
0.70mm Cu	8°	0.90	0.60	5.93
0.70mm Zu	8°	0.90	0.60	4.73

Additional Profile Information

Available in the following Materials:

Plain - Galvanised / Zn/AL
ColorCote® - ZinaCore, ZinaCore X, MagnaFlow, MagnaFlow X, AlumiGard, AlumiGard X
Precious - Aluminium / Copper / VM Zinc*

Note: *Some materials such as precious metals, non-standard ColorCote® paint systems and heavier gauges, along with the required fixings are not held in stock. Please consult with a Calder Stewart Sales Representative before ordering. *When using Zinc material, please liaise with the Zinc manufactures importers as to specific installation/design requirements, i.e. MicoMetals for VM Zinc and EuroMetals for Rheinzink. If these requirements are not followed, material and workmanship warranties cannot be issued.*

To be used in conjunction with, but not limited to, the following accessories: Ridging, Valleys, Barges, Aprons, Clips, Underlay, Underlay Support, Netting, Staples, Fastenings, Rivets and Washers. Please Note: Special procedures and products are needed when using aluminium material.

Order Specifications:

Please ensure the following are shown on all orders for this product.

- Gauge
- Material
- Quantities & Lengths
- Colour where applicable

Please be aware the following restrictions may apply when ordering this product.

- Minimum quantity required upon order is 6 lineal metres, due to our run to length manufacture.
- This product can be run to any length, however there may be restrictions due to transport capabilities (please see Lengths information - page 4)

© Calder Stewart Roofing 2015

Material Specifications Table: Corrugate

Key Facts									
[3] Minimum pitch 8° cover 760mm profile height 19mm									
Material	Steel		Aluminium		Cu	Zn	GRP [1]		
Thickness	0.40mm	0.55mm	0.7mm	0.9mm	0.7mm	0.7mm	1800	2200	2800
Weight / linear metre (kg/m)	3.10	4.27	1.84	2.37	5.93	4.73	1.8	2.2	2.8
Drape curve min. Radius (metres)	12	10	12	10	10	10	10	12	12
Purlin spacing for drape curve [2] (metres)	0.8	1.1	0.8	1.1	1.1	1.1	0.8	1.1	1.2
Bull-nose curve min. Radius (metres)	0.350	0.350	0.350	0.350	0.350	0.350	N/A	N/A	N/A

[1] GRP - (Glass Reinforced Polyester) - Based on weight per square metre
[2] Internal purlin spacing is based on 'restricted access' roof in 'high' wind zone
[3] Pitch must be increased up to 10° if cladding is to be end lapped

Notes:
For low pitch roofs down to 8°, soft materials i.e. 0.70mm aluminium should be avoided due to the risk of damage caused by foot traffic. Where foot traffic is likely to be encountered, reduce all roof spans by 10% and install walkways for post construction traffic

Material Selection Guidlelines

Specifying the correct material for your roofing and cladding installation is important to ensure its success. The Calder Stewart Roofing website provides pertinent information to help assist in the specification process, including Atmospheric and Roofing Zone Usage Charts. For additional information visit the material selection page at www.roofer.co.nz by clicking here.

© Calder Stewart Roofing 2015

Span Table: Corrugate

Maximum Purlin Spacing (Metres)							
			Material				
	Wind	Purlin	Steel 0.40mm	Steel 0.55mm	Aluminium 0.7mm	Aluminium 0.9mm	Copper 0.7mm
Roof[1]	High	Internal	N/A	1.1	N/A	N/A	0.65
		End	N/A	0.8	N/A	N/A	0.5
	Med.	Internal	0.7	1.3	N/A	1.1	0.7
		End	0.5	0.9	N/A	0.7	0.5
	Low	Internal	1.1	1.6	0.8	1.2	0.9
		End	0.7	1.0	0.5	0.8	0.6

[1]Restricted Access Roof means that the only occasional foot traffic is encountered and is restricted to walking on purlin lines only in pans or carefully across two or more crests. Walkways are to be installed where regular foot traffic is encountered and “Restricted Access” signs placed at roof access positions.

Lengths

Corrugate roofing is made to custom long run lengths. Where these exceed 16 metres, they may require special transport and handling arrangements. Corrugate is not recommended for lengths over 16 metres.

Standard cut to length tolerance is:

0-3 metres +/- 5mm
3-12 metres +/- 10mm
Over 12 metres +/- 12mm

Flashings

Flashings should be designed in accordance with E2/ AS1 (Third Edition) or the Roofing Code of Practice and must be manufactured from material compatible with the roof. Refer to suggested flashing details indicated in Calder Stewart Roofing’s Technical Drawings (provided at the end of this document). For additional information refer to the flashings page at www.roofer.co.nz by clicking here.

Calder Stewart Roofing can provide all neccessary flashings for your given installation.

© Calder Stewart Roofing 2015

Colour Availability

Calder Stewart Roofing offers three distinct options for its pre-painted products:

Standard Colours

Standard Colours, which are available ex-stock from all branches of Calder Stewart Roofing.
(See chart below)

Black	Greyfriars	Gull Grey	Ironsand
Karaka	New Denim Blue	Permanent Green	Rivergum
Sandstone Grey	Scoria	Slate	Titania

Note:
Be advised the standard colours reproduced on this page are approximate. Slight variations may occur.
For more accurate colour matches, contact Calder Stewart Roofing to obtain actual colour coated metal samples.

Non-Standard Colours

Non-Standard Colours, in which additional coil fees and nominal lead times apply, are available from Calder Stewart Roofing. Minimum quantities (in metres) for coil orders also apply for this option. To view the wide range of non-standard colours available visit the Calder Stewart Roofing Colour Availability Page by clicking here.

Matched Colours

Matched Colours, in which colours are matched to a colour preference, brand or environmental design consideration. Charges apply for colour matching and minimum quantities (in metres) for coil orders do apply. Please consult Calder Stewart Roofing for further details.

© Calder Stewart Roofing 2015

Fastenings: Corrugate

Internal spans in excess of 2.0 metres require stitch screws or 4.8mm bulb type rivets. To be installed on lap at mid-span (side stitched). If roof lengths are 12 metres or over, then the top 2 rows of purlins should be drilled to fixing size only and all remaining purlin rows pre-drilled with 12mm oversize holes.

Purlin Material	Fixing Type/ Roofing Material			Notes
	Steel	Aluminium, Copper or Zinc	GRP	
Steel [1] (Roof)	12g x 50mm Steeltite c/w neoprene washer [3,4]	12g x 50mm 304 Stainless Steeltite c/w with neoprene washer, 30mm EPDM and LSW[2]	12g x 65mm Steeltite c/w neoprene washer, 30mm EPDM and LSW[2]	Crest fix only pre-drill with 12mm dia hole for GRP applications up to 18mtrs
Timber [1] (Roof)	12g x 65mm Timbertite c/w neoprene washer [3,4]	12g x 65mm 304 Stainless Timbertite c/w neoprene washer	12g x 65mm Timbertite c/w neoprene washer, 30mm EPDM and LSW[2]	Crest fix only pre-drill with 12mm dia hole for GRP applications up to 18mtrs

[1] Fasteners shall be AS3566 class 4 or 304stainless.
[2] Load Spreading Washer – EDL Fasteners or equivalent.
[3] Where fixing to timber battens - use timbertite screws and ensure sufficient fixing between batten and purlin.
[4] When this profile is used in Very High and Extra High wind zones LSW`s and EPDM washers should be used

Purlin Placement Table

Purlin Placement Chart for Standard & Wide Roll Top Ridging				
Distance to lower edge of top Purlin from ridgeline of truss/rafter mm.				
	Ex 75x50 Purlins on flat when ridging type is:		Ex 75x50 Purlins on edge when ridging type is:	
Pitch	Standard	Wide	Standard	Wide
8°	170	245	155	229
10°	165	245	150	227
15°	160	225	140	215
20°	155	217	130	200
25°	140	214	120	194
30°	145	205	110	183
35°	130	197	100	171
40°	120	189	90	158
45°	110	180	70	153
50°	100	169	60	138

© Calder Stewart Roofing 2015

Roof Fastener Layout Options

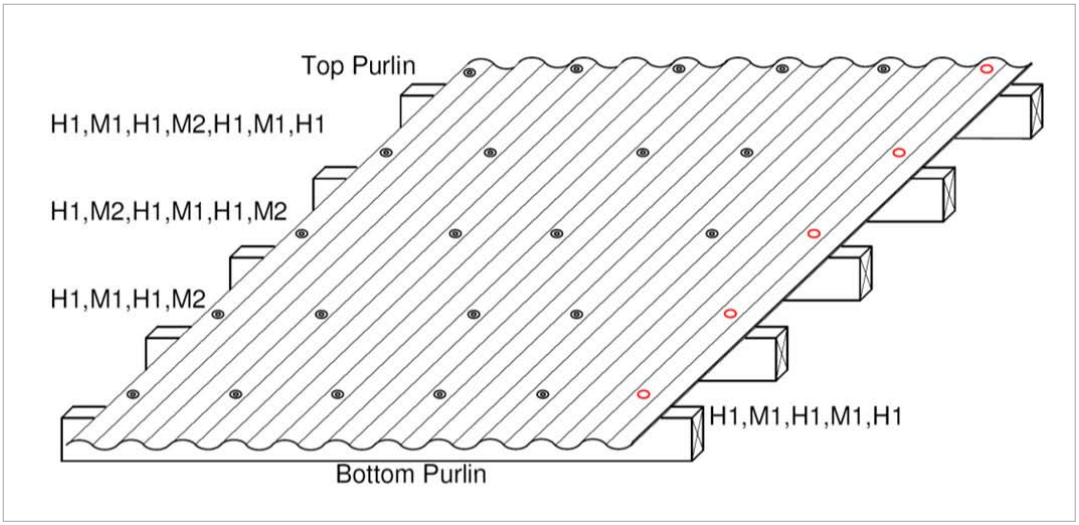

1. All fasteners and associated components are required to meet or exceed the durability of the material they are being used with.
2. Fastenings must be perpendicular to the material and shall be tightened sufficiently to produce a weathertight seal.
3. Fastenings must not be over-tightened, as this may result in material damage or cause failure of the weathertight seal.
4. Load spreading/profile washers shall be used:
   - To accommodate thermal expansion
   - When ever an over-sized hole is required
   - To provide extra wind uplift capacity
   - To increase load values on wider spaced purlin spans
   - In accordance with Calder Stewart Roofing literature

© Calder Stewart Roofing 2015

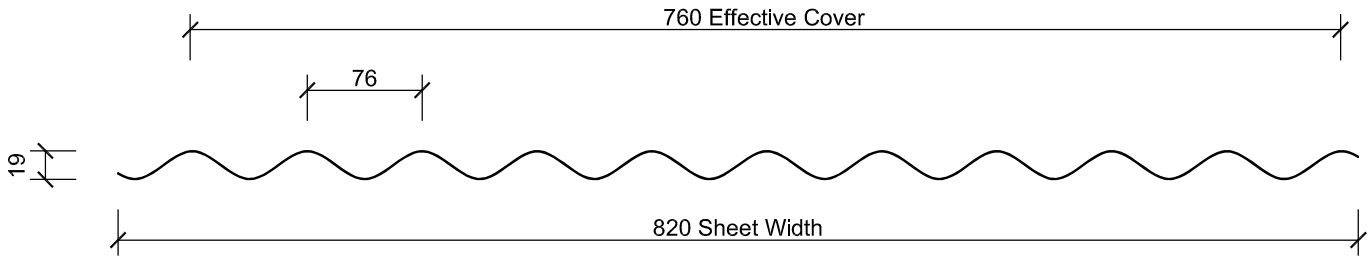

- / - Profile Detail
Scale 1:5

File Downloads
(click icons to download)

AutoDesk DWG Format

AutoDesk RVT Format

PDF Format

CalderStewart

Profile Type:		Corrugate	
Approved By: J Fensom	Detail No.	R-001-01	Revision: -
Date: 15/02/13			

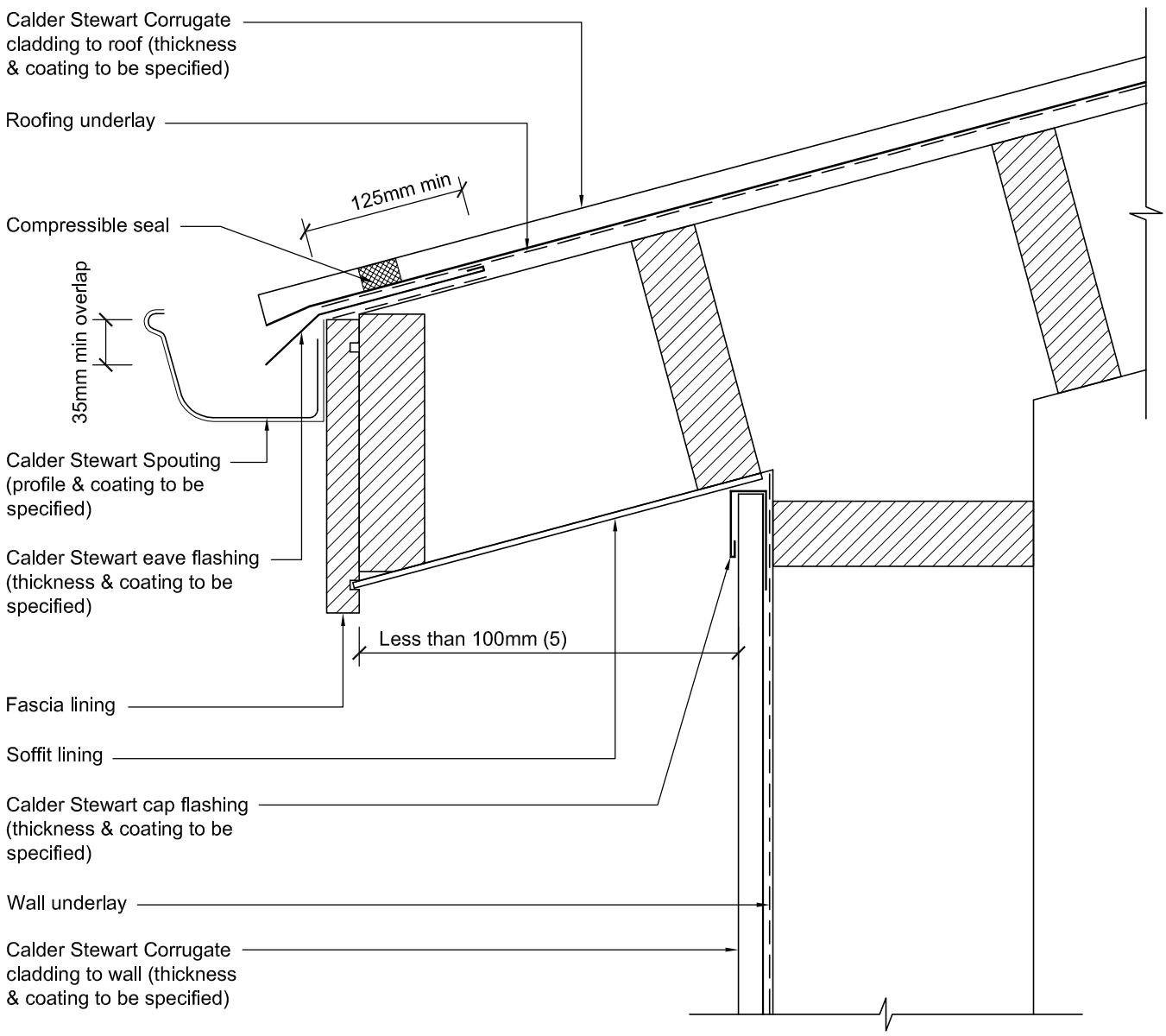

Eave Detail (Soffit)

Scale 1:5

General Notes:

1. Indicative structure shown for purposes of illustration only.
2. Confirmation of thickness and coating to cladding/flashings required.
3. For "X, Y, & Z" dimensions, refer to Table 7 of E2/AS1.
4. Refer to installation information for fixing requirements
5. Eave flashing required for all roofs under 10° pitch and where fascia is 100mm or less from cladding.

File Downloads
(click icons to download)

AutoDesk DWG Format
AutoDesk RVT Format
PDF Format

Profile Type:	Corrugate		
Approved By: J Fensom	Detail No. R-001-02	Revision: -	
Date: 15/02/13			

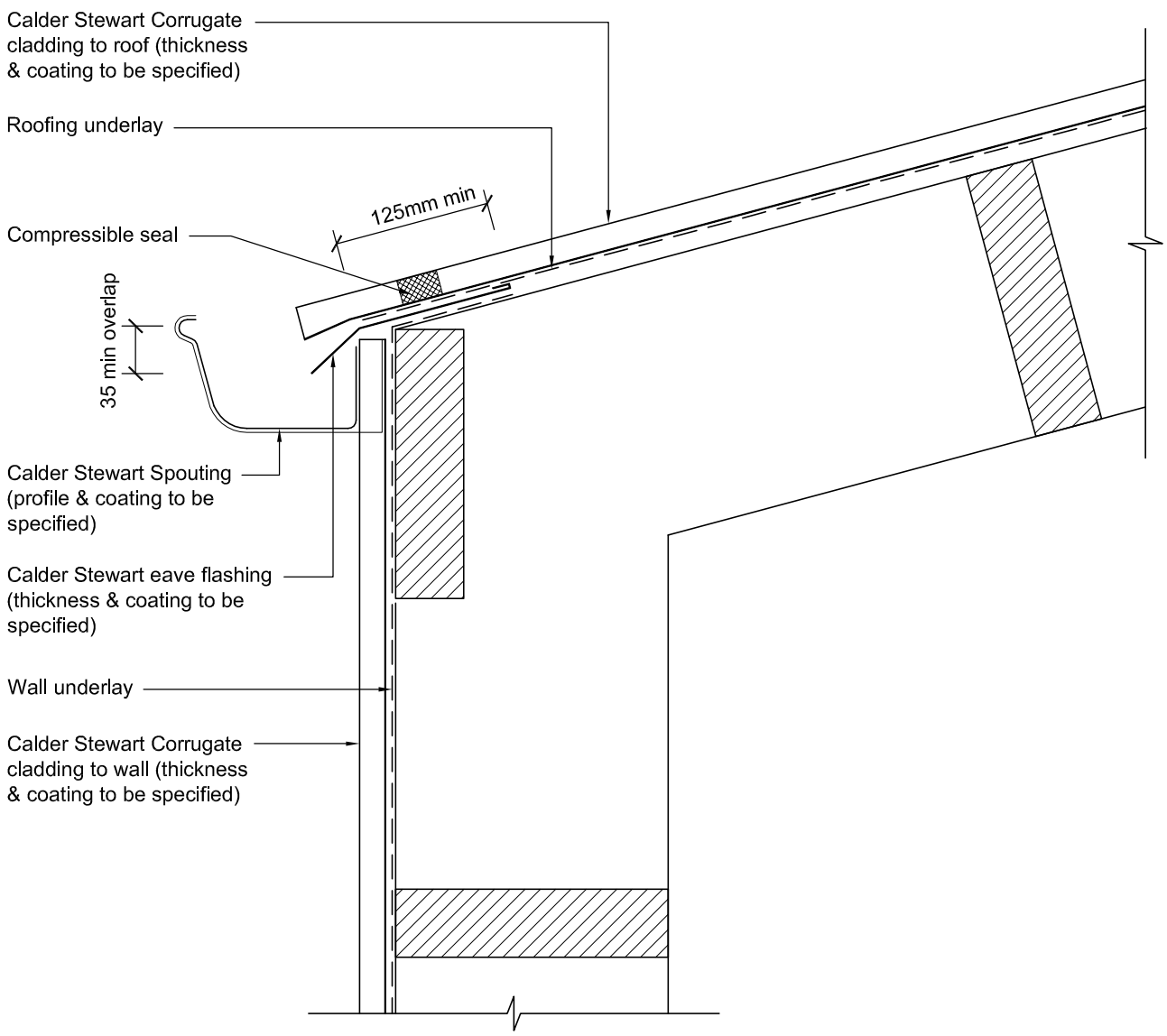

Eave Detail (No Soffit)

Scale 1:5

General Notes:

1. Indicative structure shown for purposes of illustration only.
2. Confirmation of thickness and coating to cladding/flashings required.
3. For "X, Y, & Z" dimensions, refer to Table 7 of E2/AS1.
4. Refer to installation information for fixing requirements
5. Eave flashing required for all roofs under 10° pitch and where fascia is 100mm or less from cladding.

File Downloads
(click icons to download)

AutoDesk DWG Format
AutoDesk RVT Format
PDF Format

CalderStewart

Profile Type:	Corrugate		
Approved By: J Fensom	Detail No. R-001-03	Revision: -	
Date: 15/02/13			

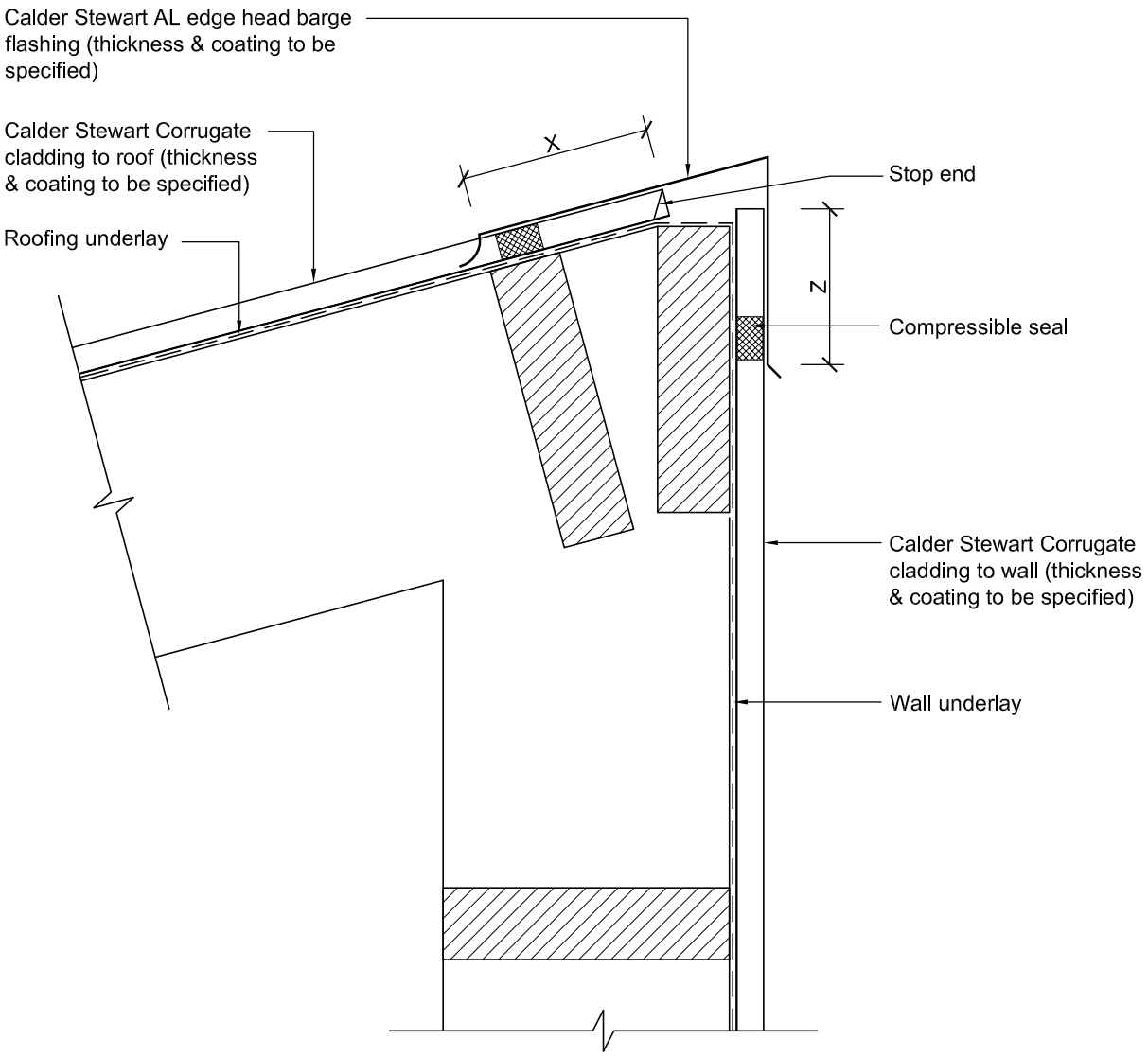

Head Barge Detail

Scale 1:5

General Notes:

1. Indicative structure shown for purposes of illustration only.
2. Confirmation of thickness and coating to cladding/flashings required.
3. For "X, Y, & Z" dimensions, refer to Table 7 of E2/AS1.
4. Refer to installation information for fixing requirements

File Downloads
(click icons to download)

AutoDesk DWG Format
AutoDesk RVT Format
PDF Format

Calder Stewart

Profile Type:	Corrugate		
Approved By: J Fensom	Detail No. R-001-04	Revision: -	
Date: 15/02/13			

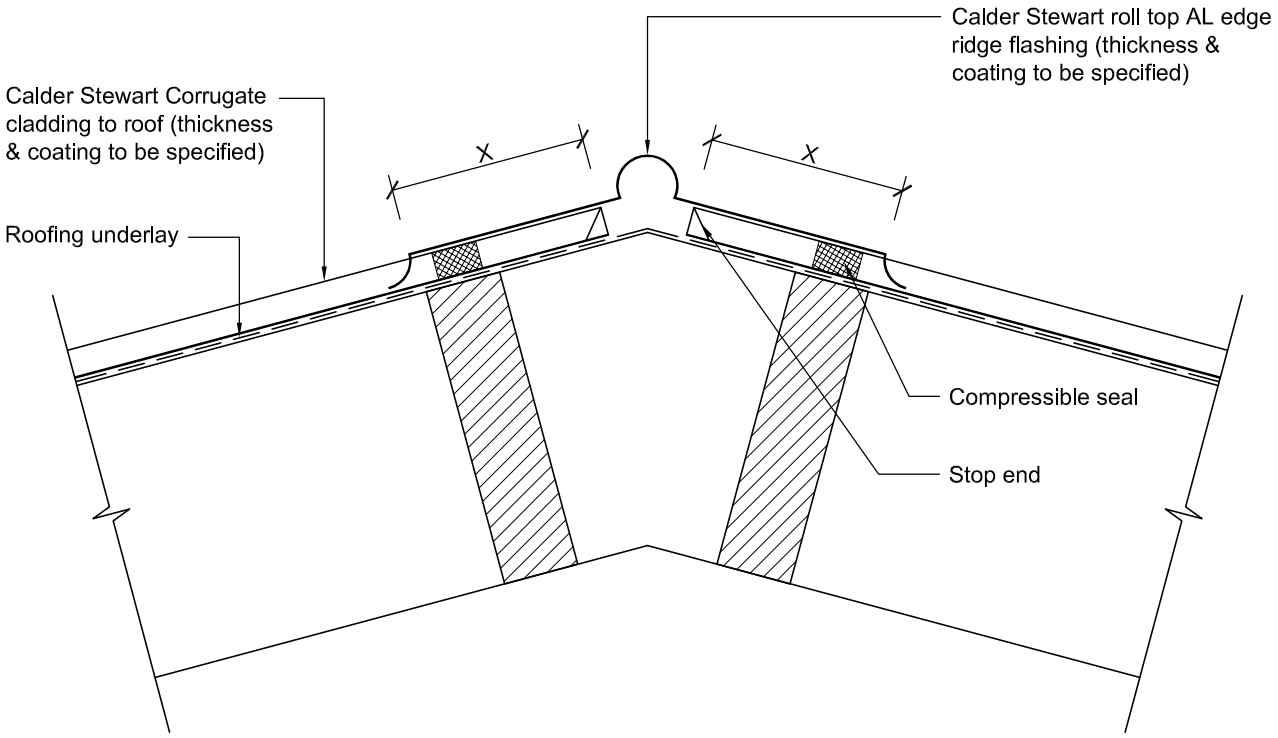

Ridge Detail

Scale 1:5

General Notes:

1. Indicative structure shown for purposes of illustration only.
2. Confirmation of thickness and coating to cladding/flashings required.
3. For "X, Y, & Z" dimensions, refer to Table 7 of E2/AS1.
4. Refer to installation information for fixing requirements

File Downloads
(click icons to download)

AutoDesk DWG Format
AutoDesk RVT Format
PDF Format

Calder Stewart

Profile Type:	Corrugate		
Approved By: J Fensom	Detail No. R-001-05	Revision: -	
Date: 15/02/13			

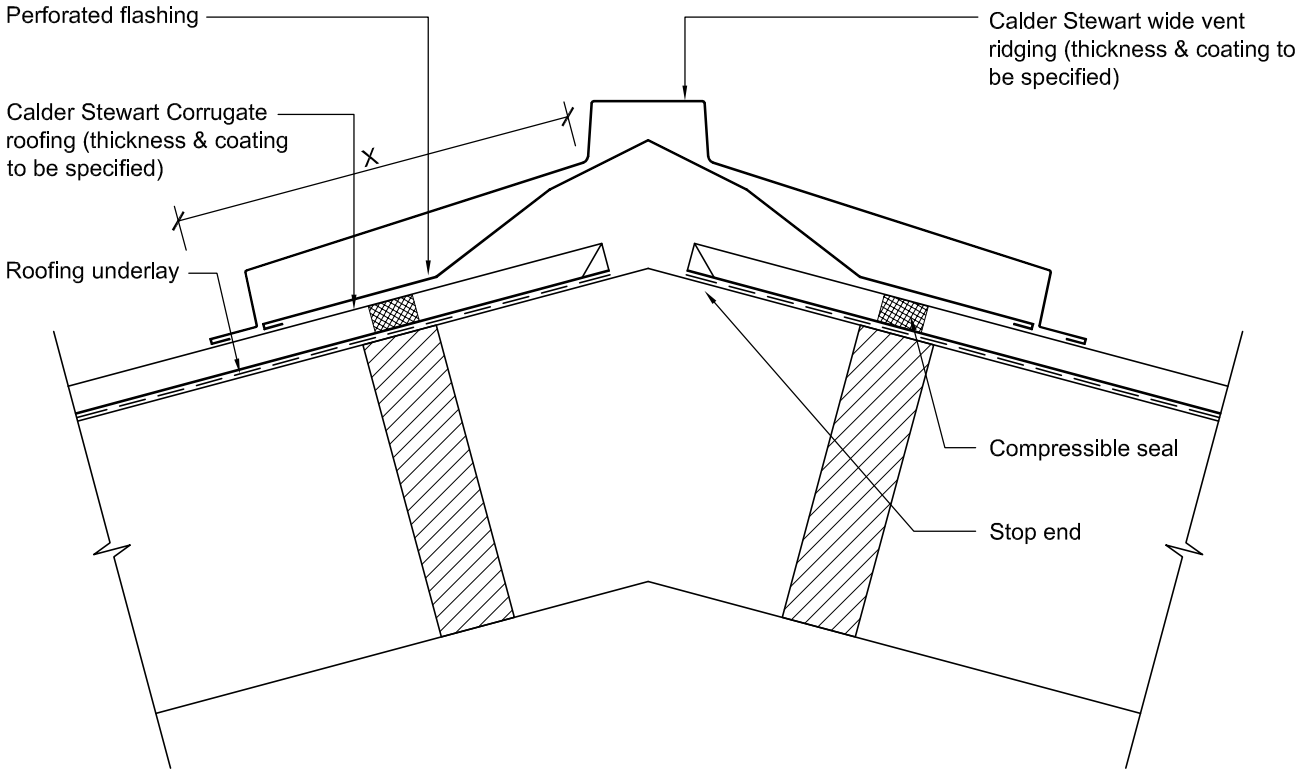

Vented Ridge Detail

Scale 1:5

General Notes:

1. Indicative structure shown for purposes of illustration only.
2. Confirmation of thickness and coating to cladding/flashings required.
3. For "X, Y, & Z" dimensions, refer to Table 7 of E2/AS1.
4. Refer to installation information for fixing requirements

File Downloads
(click icons to download)

AutoDesk DWG Format
AutoDesk RVT Format
PDF Format

Calder Stewart

Profile Type:	Corrugate		
Approved By: J Fensom	Detail No. R-001-06	Revision: -	
Date: 15/02/13			

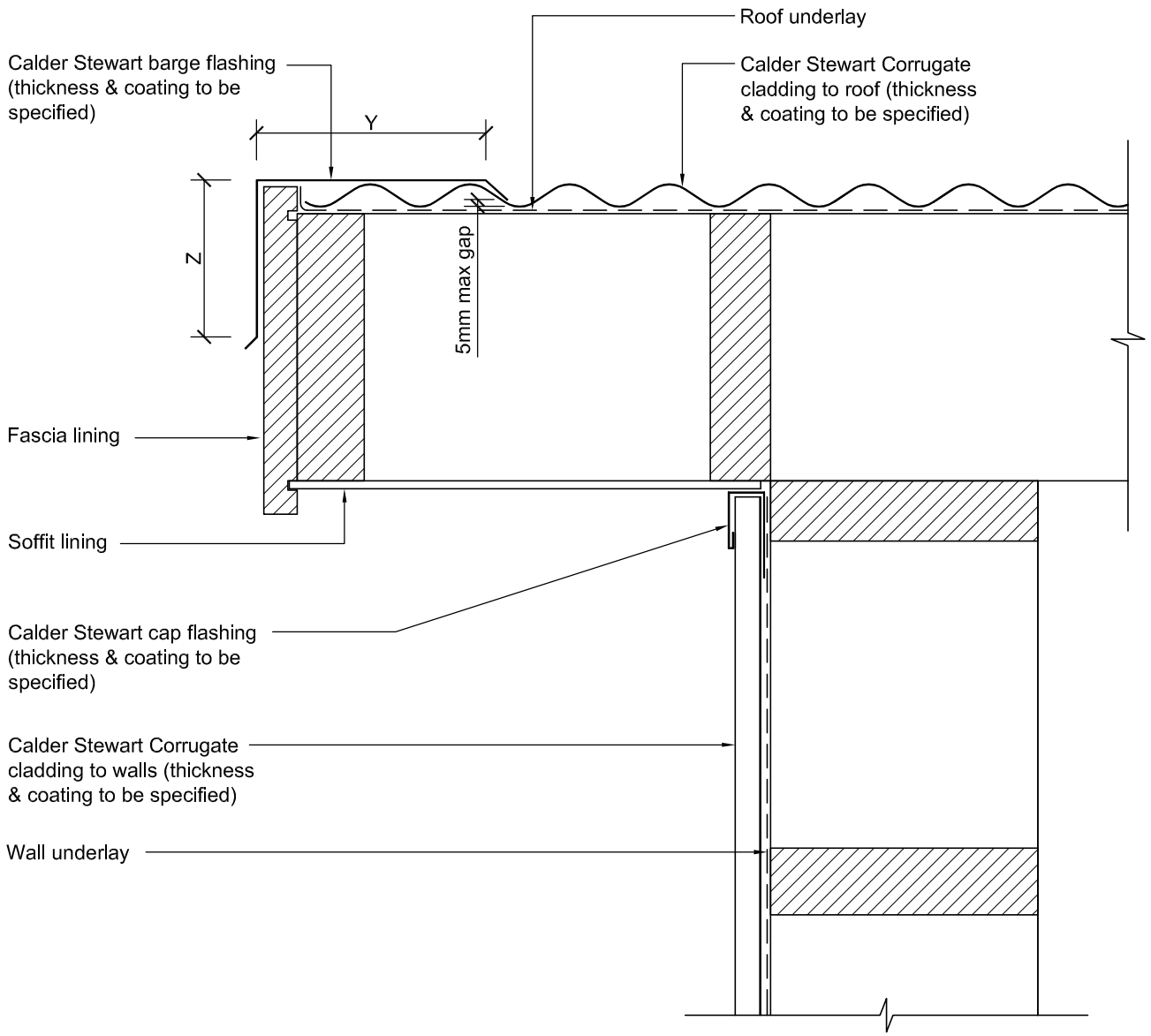

- / -

Barge Detail (Soffit)

Scale 1:5

General Notes:

1. Indicative structure shown for purposes of illustration only.
2. Confirmation of thickness and coating to cladding/flashings required.
3. For "X, Y, & Z" dimensions, refer to Table 7 of E2/AS1.
4. Refer to installation information for fixing requirements

File Downloads
(click icons to download)

AutoDesk DWG Format
AutoDesk RVT Format
PDF Format

CalderStewart

Profile Type:	Corrugate		
Approved By: J Fensom	Detail No. R-001-07	Revision: -	
Date: 15/02/13			

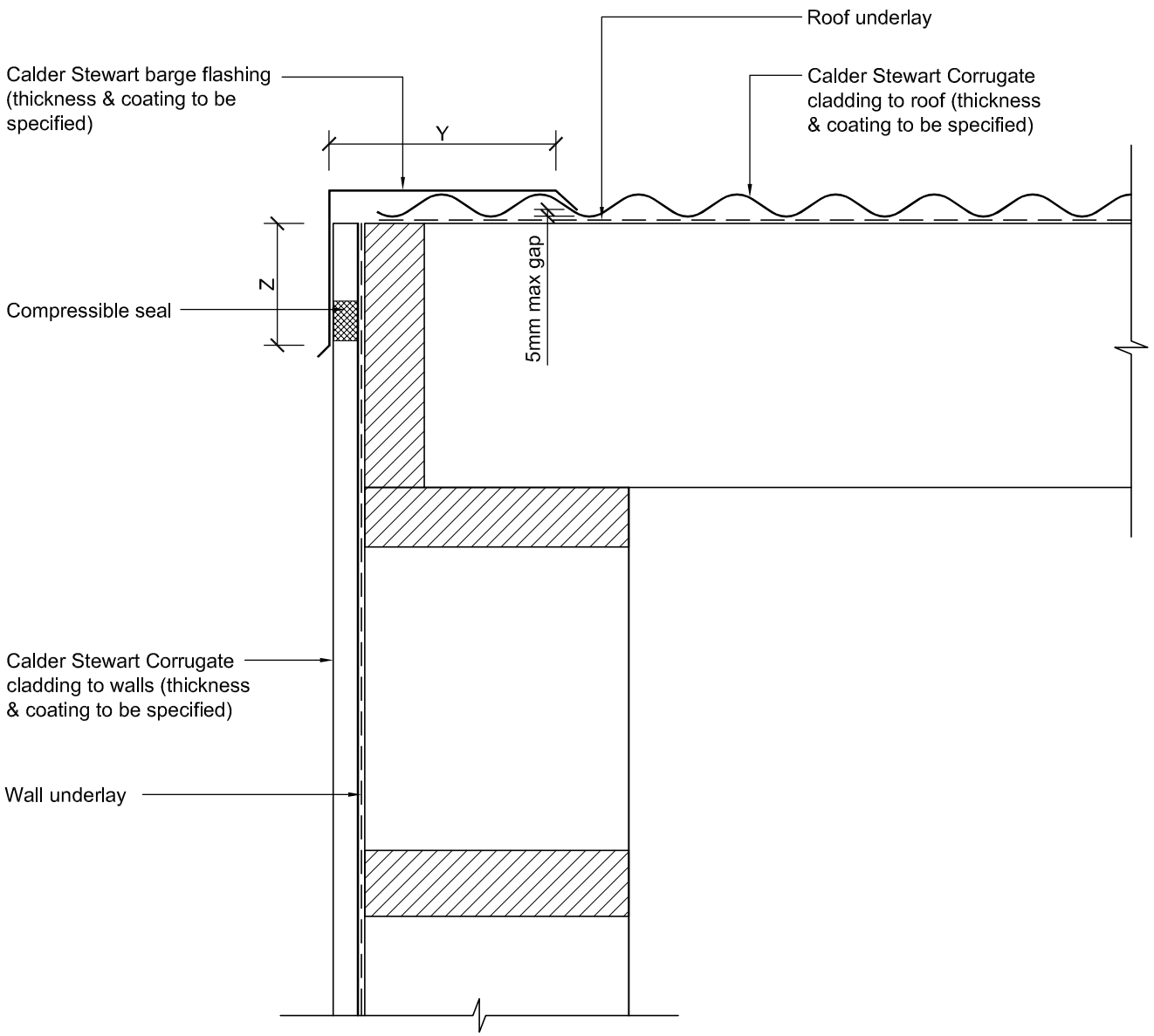

Barge Detail (No Soffit)

Scale 1:5

General Notes:

1. Indicative structure shown for purposes of illustration only.
2. Confirmation of thickness and coating to cladding/flashings required.
3. For "X, Y, & Z" dimensions, refer to Table 7 of E2/AS1.
4. Refer to installation information for fixing requirements

File Downloads
(click icons to download)

AutoDesk DWG Format
AutoDesk RVT Format
PDF Format

CalderStewart	Profile Type: Corrugate		
	Approved By: J Fensom	Detail No. R-001-08	Revision: -
	Date: 15/02/13		

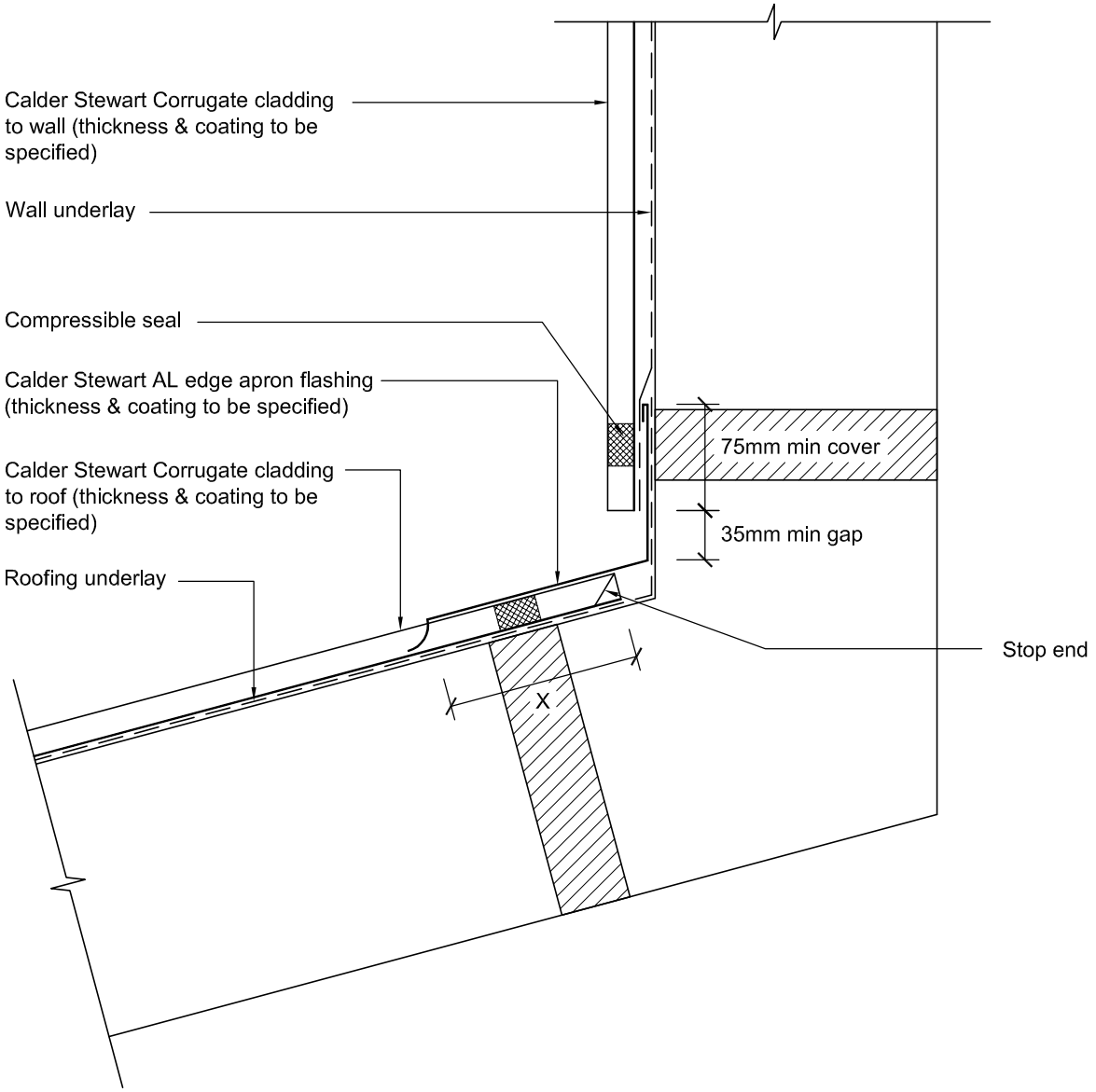

Apron Detail (Transverse)

Scale 1:5

General Notes:

1. Indicative structure shown for purposes of illustration only.
2. Confirmation of thickness and coating to cladding/flashings required.
3. For "X, Y, & Z" dimensions, refer to Table 7 of E2/AS1.
4. Refer to installation information for fixing requirements

File Downloads
(click icons to download)

AutoDesk DWG Format
AutoDesk RVT Format
PDF Format

Calder Stewart

Profile Type:	Corrugate		
Approved By: J Fensom	Detail No. R-001-09	Revision: -	
Date: 15/02/13			

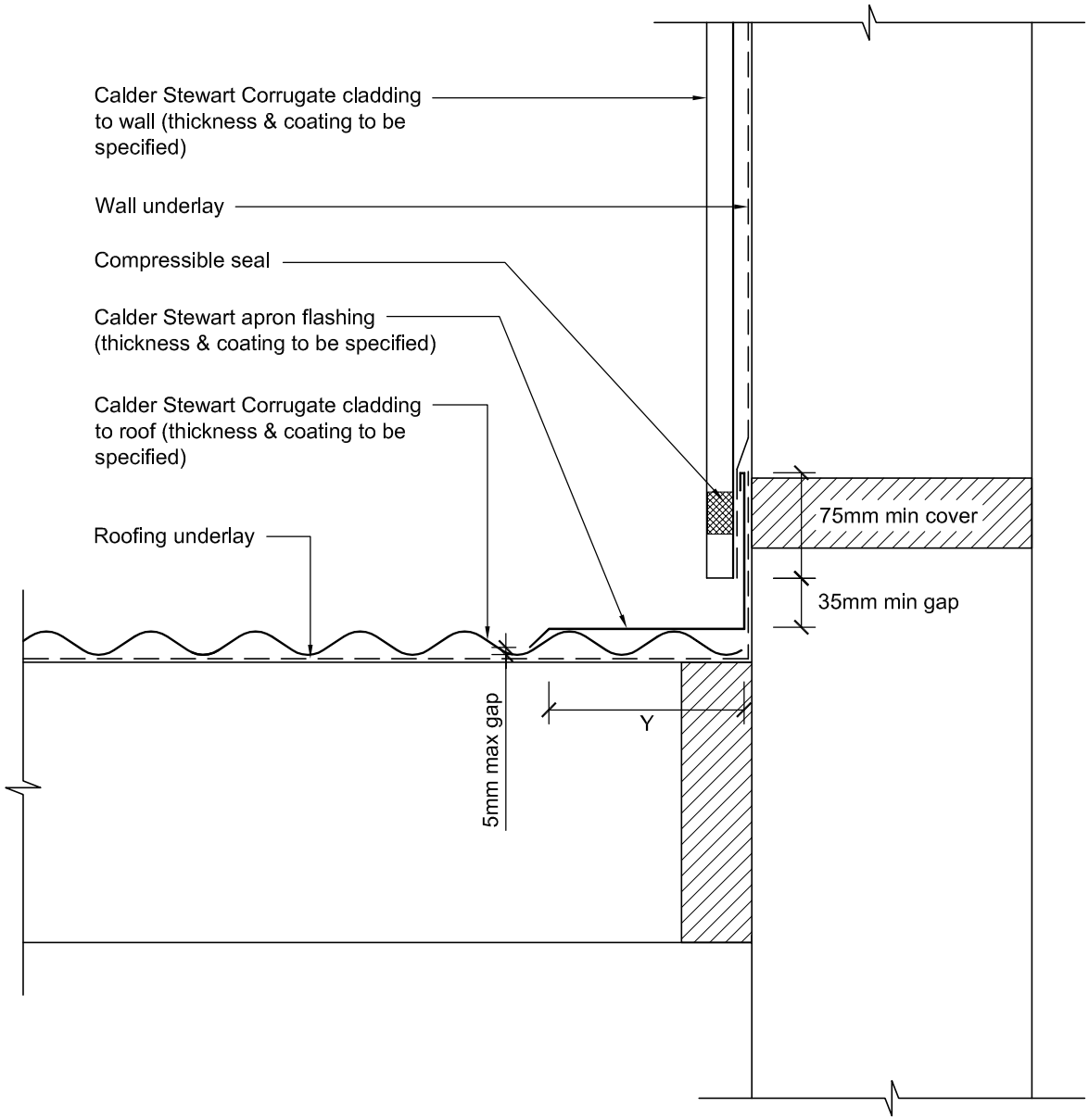

Apron Detail (Parallel)

Scale 1:5

General Notes:

1. Indicative structure shown for purposes of illustration only.
2. Confirmation of thickness and coating to cladding/flashings required.
3. For "X, Y, & Z" dimensions, refer to Table 7 of E2/AS1.
4. Refer to installation information for fixing requirements

File Downloads
(click icons to download)

AutoDesk DWG Format
AutoDesk RVT Format
PDF Format

CalderStewart	Profile Type: Corrugate		
	Approved By: J Fensom	Detail No. R-001-10	Revision: -
	Date: 15/02/13		

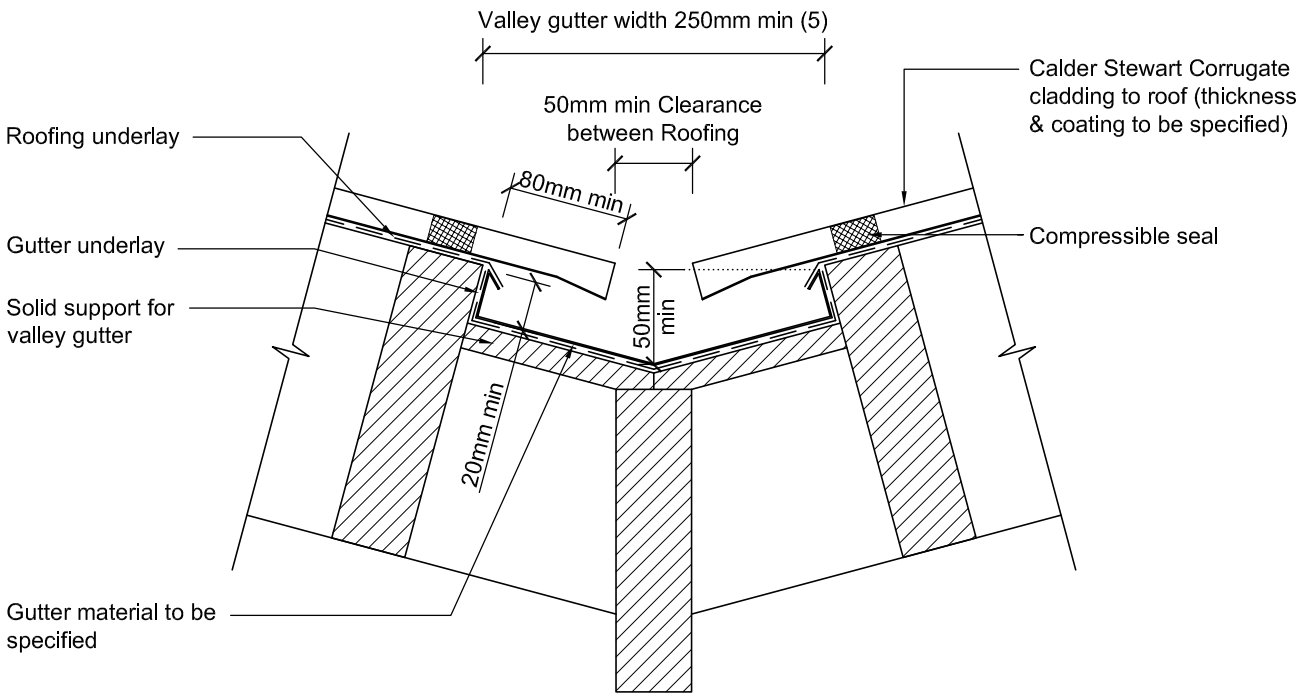

Valley Gutter Detail

Scale 1:5

General Notes:

1. Indicative structure shown for purposes of illustration only.
2. Confirmation of thickness and coating to cladding/flashings required.
3. For "X, Y, & Z" dimensions, refer to Table 7 of E2/AS1.
4. Refer to installation information for fixing requirements
5. Refer to Table 8 E2/AS1for maximum roof catchment areas for valley gutters.
6. Minimum width of valley gutter may reduce to 160mm, providing roof catchment area is in accordance with table 8 of E2/AS1. In this case, cover of roof cladding over gutter shall be reduced to 60mm to provide a clearance gap of 40mm.

File Downloads
(click icons to download)

AutoDesk DWG Format
AutoDesk RVT Format
PDF Format

CalderStewart

Profile Type:	Corrugate		
Approved By: J Fensom	Detail No. R-001-11	Revision: -	
Date: 15/02/13			

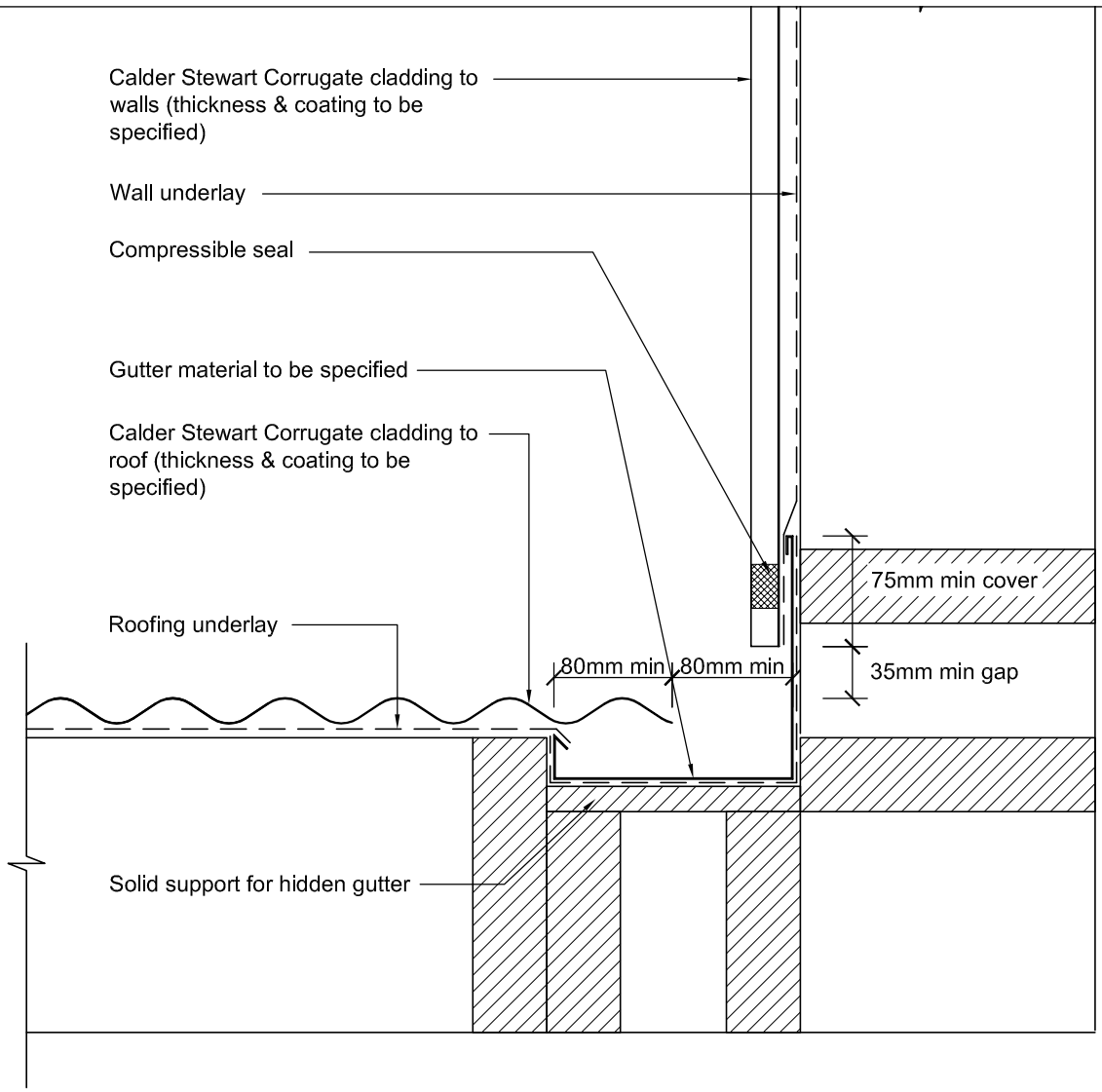

Hidden Gutter Detail

Scale 1:5

General Notes:

1. Indicative structure shown for purposes of illustration only.
2. Confirmation of thickness and coating to cladding/flashings required.
3. For "X, Y, & Z" dimensions, refer to Table 7 of E2/AS1.
4. Refer to installation information for fixing requirements
5. Where gutter finishes within the length of the wall, step lower part of gutter out to 10mm past the cladding line, while maintaining required clearances, to allow the gutter to feed into the lower eaves gutter.

File Downloads
(click icons to download)

AutoDesk DWG Format
AutoDesk RVT Format
PDF Format

Calder Stewart	Profile Type: Corrugate		
	Approved By: J Fensom	Detail No. R-001-12	Revision: -
	Date: 15/02/13		

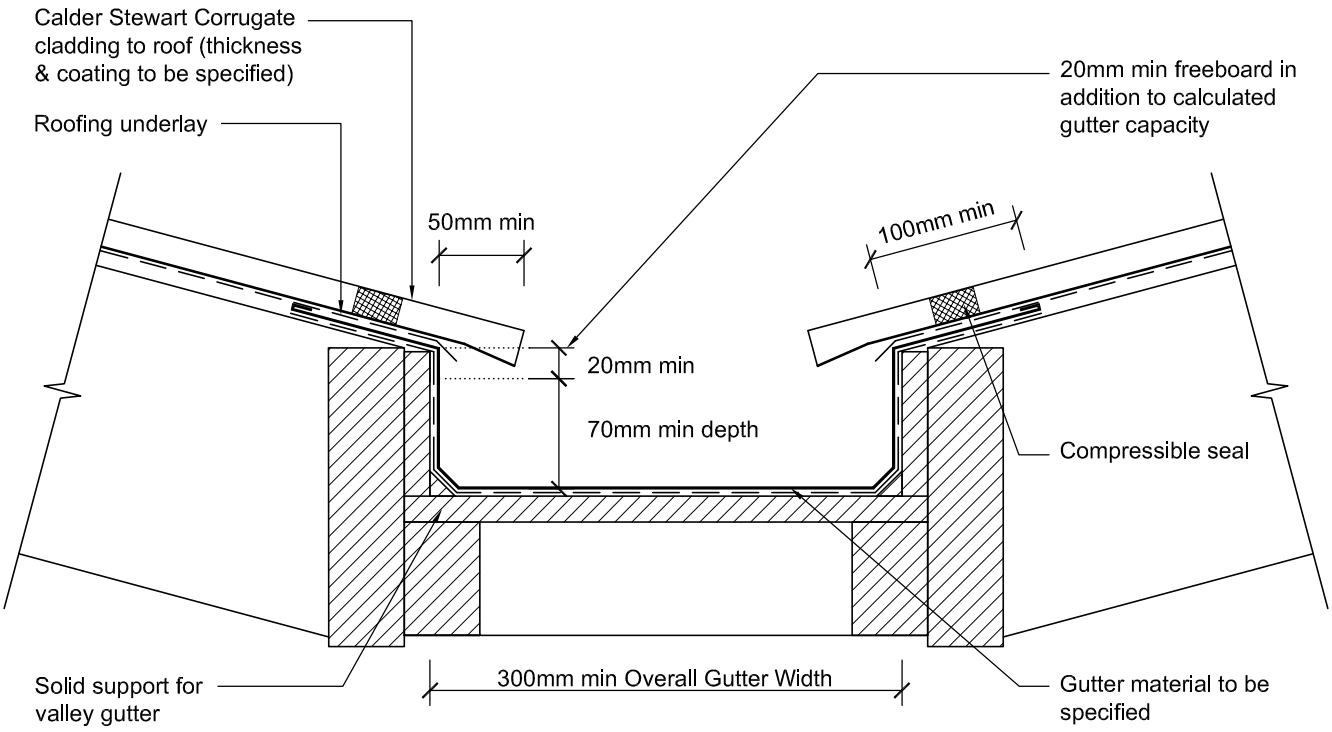

Internal Gutter Detail

Scale 1:5

General Notes:

1. Indicative structure shown for purposes of illustration only.
2. Confirmation of thickness and coating to cladding/flashings required.
3. For "X, Y, & Z" dimensions, refer to Table 7 of E2/AS1.
4. Refer to installation information for fixing requirements
5. Gutter depth calculated from E1/AS1.
6. 1:100 min gutter fall.
7. For gutter drainage and gutter lining refer to paragraph 8.1.6.1 E2/AS1.

File Downloads
(click icons to download)

AutoDesk DWG Format
AutoDesk RVT Format
PDF Format

CalderStewart	Profile Type: Corrugate		
	Approved By: J Fensom	Detail No. R-001-13	Revision: -
	Date: 15/02/13		

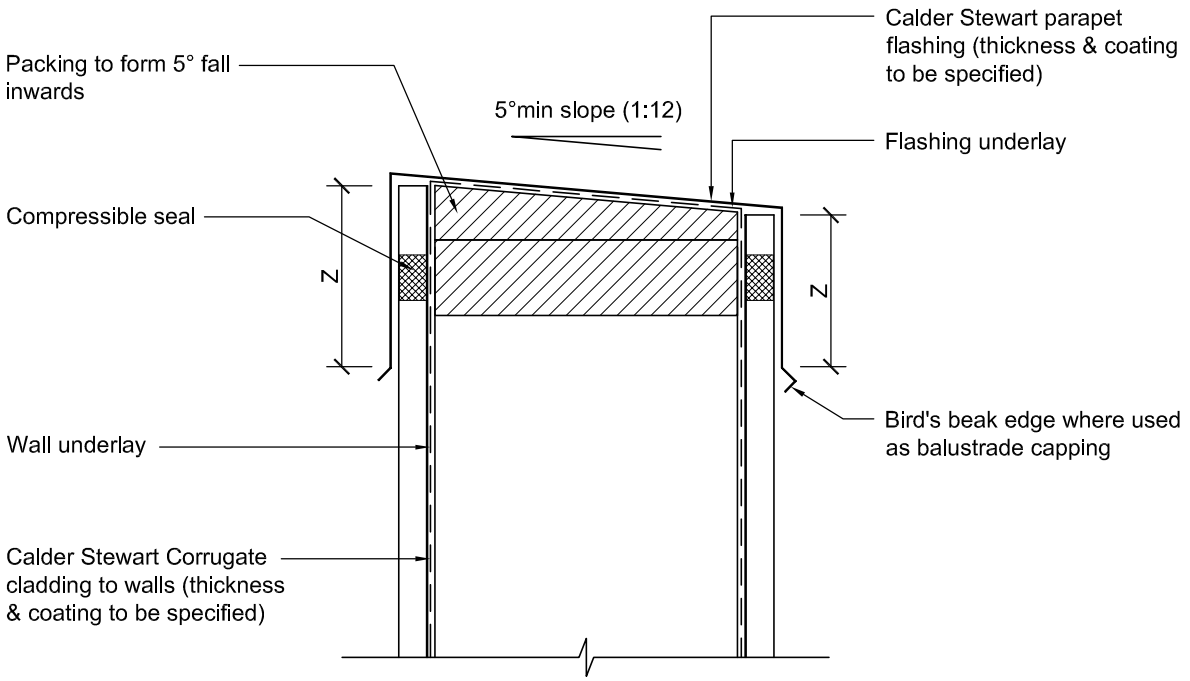

- / - Parapet Detail
Scale 1:5

General Notes:

1. Indicative structure shown for purposes of illustration only.
2. Confirmation of thickness and coating to cladding/flashings required.
3. For "X, Y, & Z" dimensions, refer to Table 7 of E2/AS1.
4. Refer to installation information for fixing requirements
5. Bird's beak drip edge where used as balustrade capping

File Downloads
(click icons to download)

AutoDesk DWG Format
AutoDesk RVT Format
PDF Format

CalderStewart	Profile Type: Corrugate		
	Approved By: J Fensom	Detail No. R-001-14	Revision: -
	Date: 15/02/13		

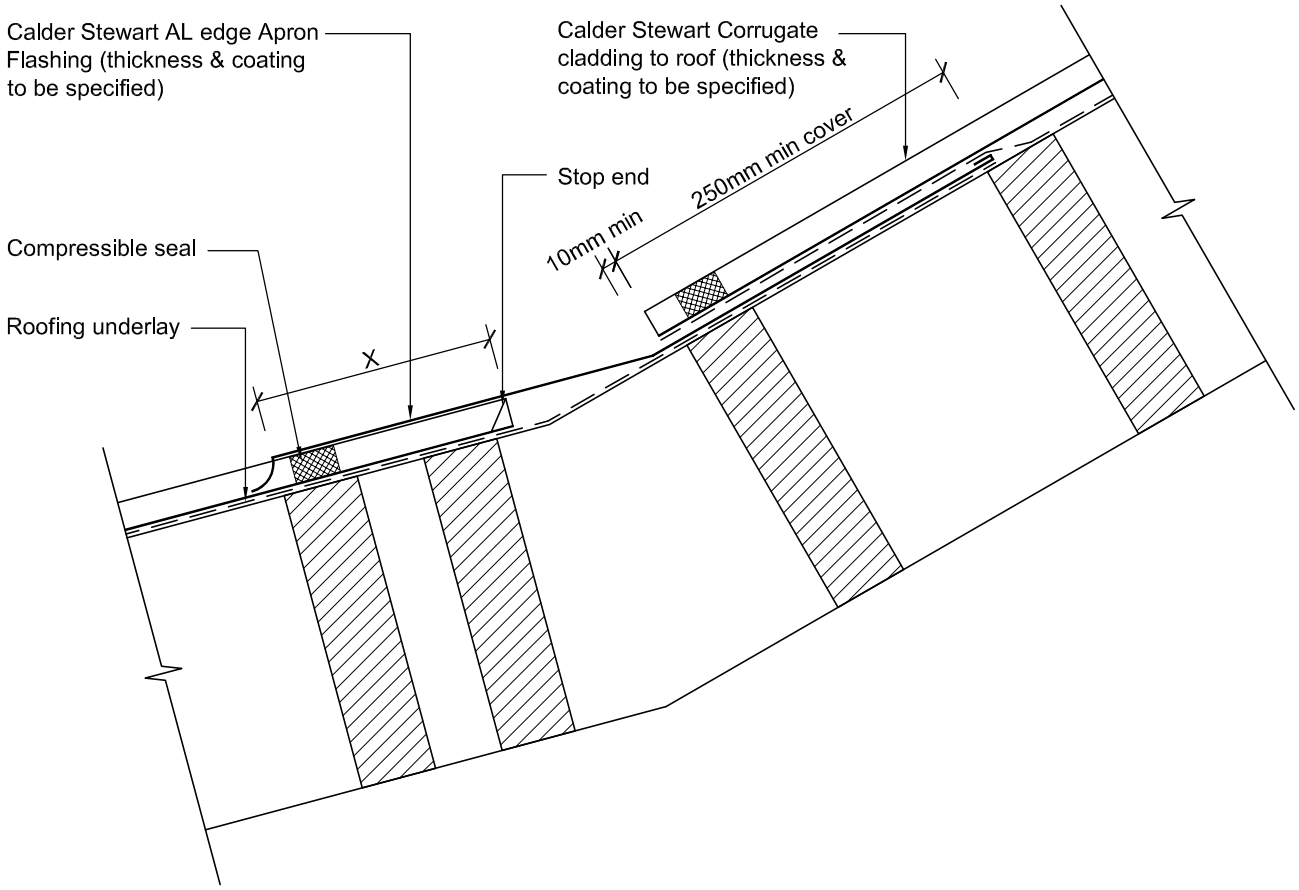

Change in Pitch Detail

Scale 1:5

General Notes:

1. Indicative structure shown for purposes of illustration only.
2. Confirmation of thickness and coating to cladding/flashings required.
3. For "X, Y, & Z" dimensions, refer to Table 7 of E2/AS1.
4. Refer to installation information for fixing requirements

File Downloads
(click icons to download)

AutoDesk DWG Format
AutoDesk RVT Format
PDF Format

Calder Stewart	Profile Type: Corrugate		
	Approved By: J Fensom	Detail No. R-001-15	Revision: -
	Date: 15/02/13		

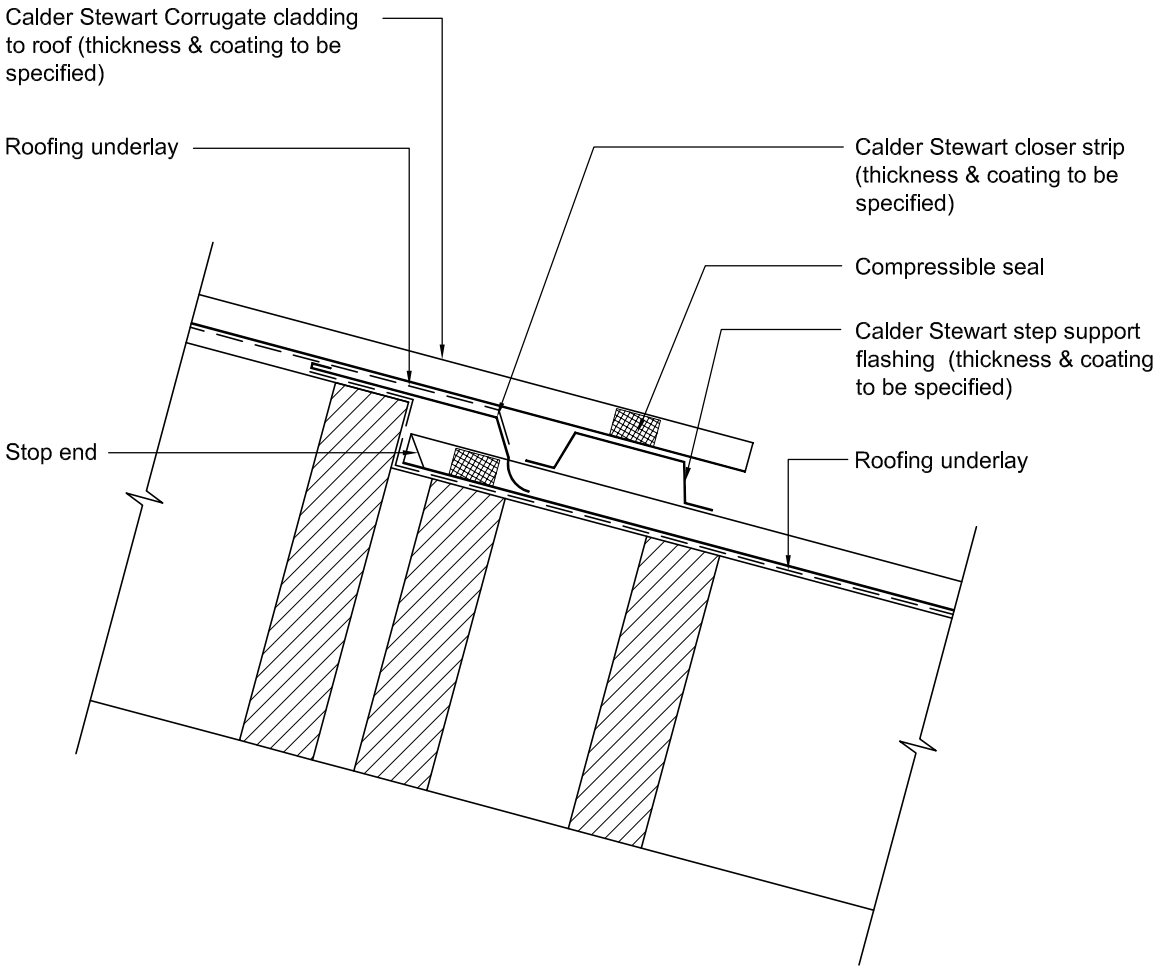

Roof Step Detail

Scale 1:5

General Notes:

1. Indicative structure shown for purposes of illustration only.
2. Confirmation of thickness and coating to cladding/flashings required.
3. For "X, Y, & Z" dimensions, refer to Table 7 of E2/AS1.
4. Refer to installation information for fixing requirements

File Downloads
(click icons to download)

AutoDesk DWG Format
AutoDesk RVT Format
PDF Format

Calder Stewart

Profile Type:	Corrugate		
Approved By: J Fensom	Detail No. R-001-16	Revision: -	
Date: 15/02/13			

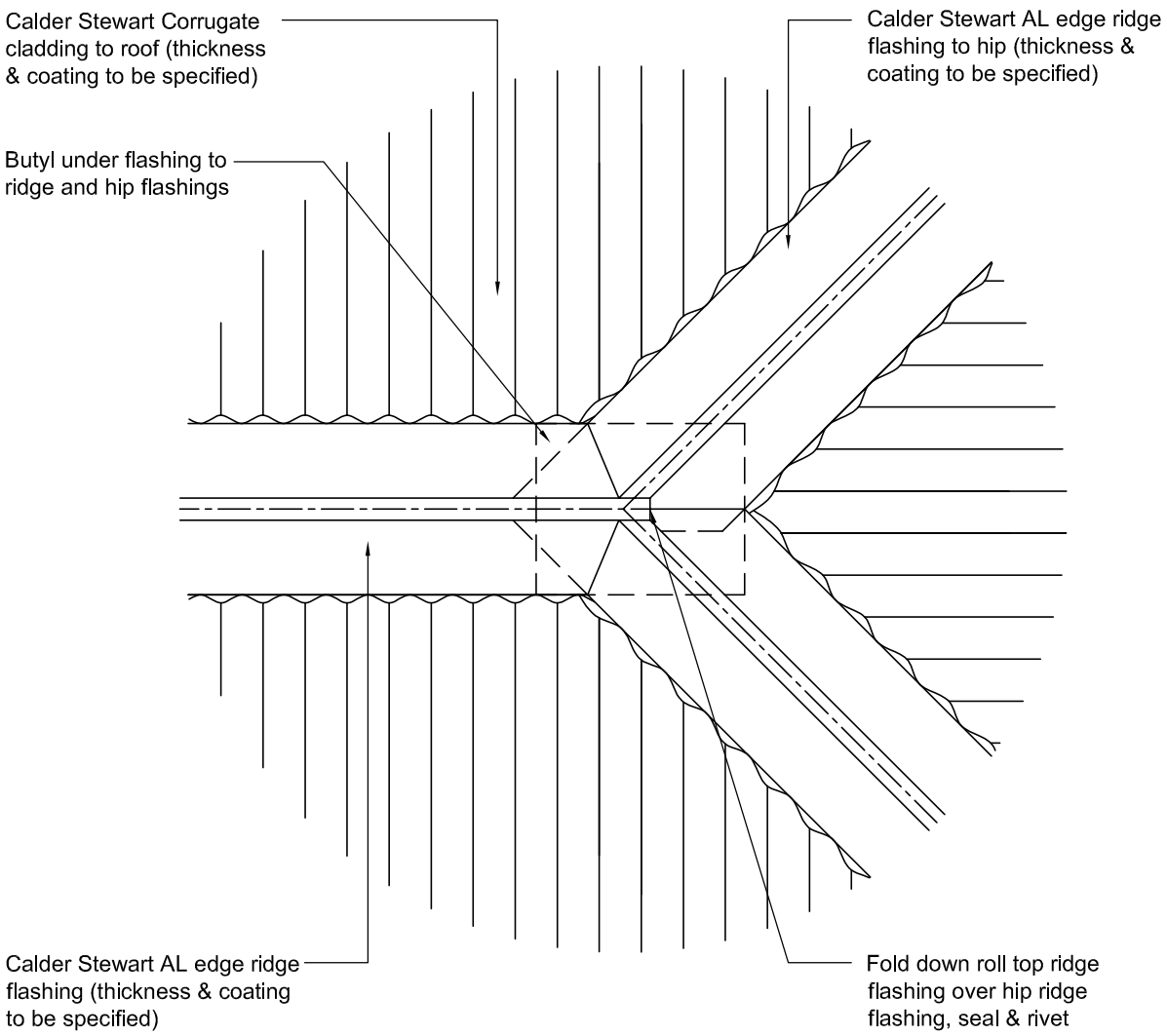

Hip Detail

Scale 1:10

General Notes:

1. Indicative structure shown for purposes of illustration only.
2. Confirmation of thickness and coating to cladding/flashings required.
3. For "X, Y, & Z" dimensions, refer to Table 7 of E2/AS1.
4. Refer to installation information for fixing requirements
5. Butyl under flashing. Place on top of cladding prior to junction being formed

File Downloads
(click icons to download)

AutoDesk DWG Format
AutoDesk RVT Format
PDF Format

CalderStewart

Profile Type:		Corrugate	
Approved By: J Fensom	Detail No.	R-001-17	Revision: -
Date: 15/02/13			

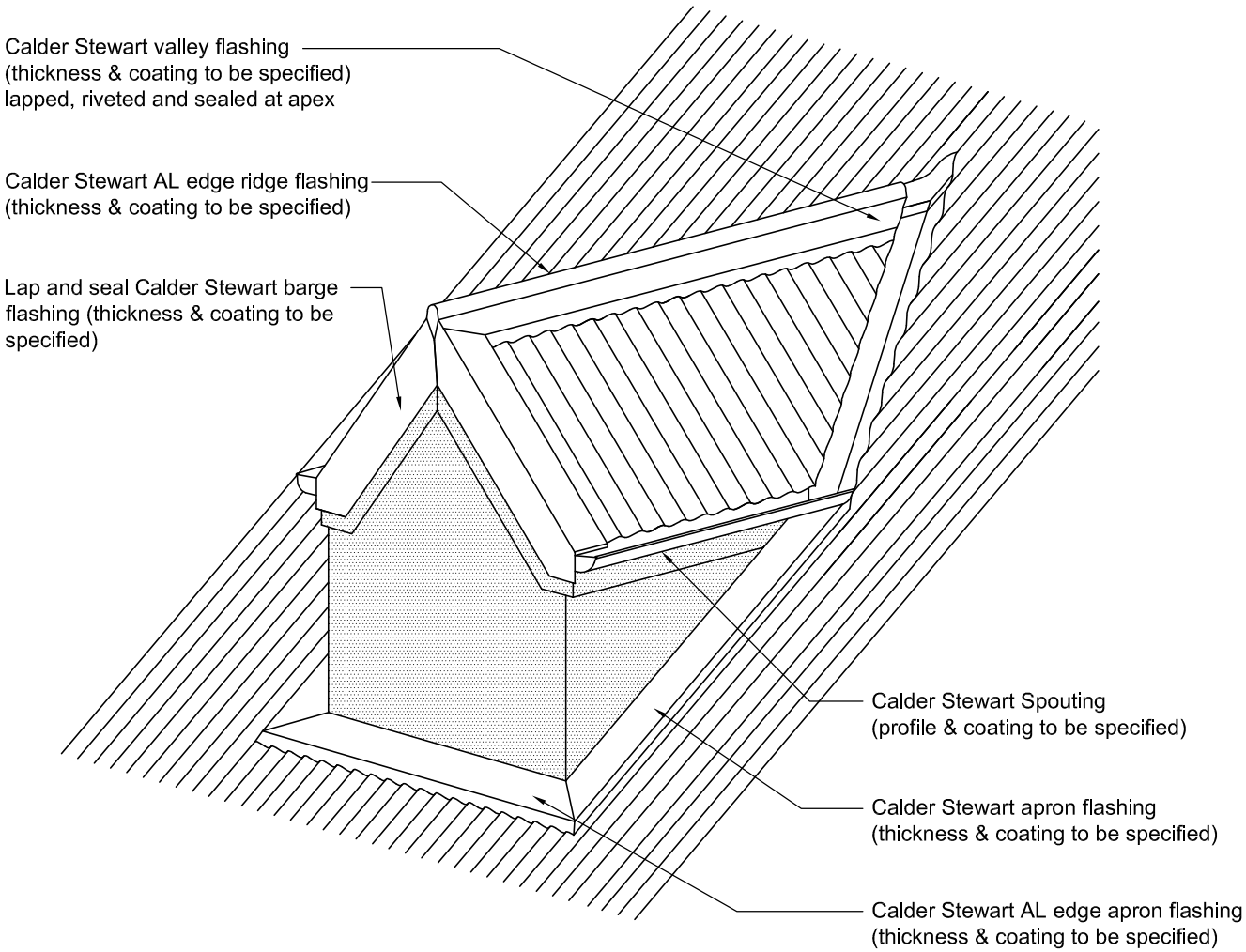

Dormer Detail

Scale 1:10

General Notes:

1. Indicative structure shown for purposes of illustration only.
2. Confirmation of thickness and coating to cladding/flashings required.
3. For "X, Y, & Z" dimensions, refer to Table 7 of E2/AS1.
4. Refer to installation information for fixing requirements

File Downloads
(click icons to download)

AutoDesk DWG Format

AutoDesk RVT Format

PDF Format

Calder Stewart

Profile Type:	Corrugate		
Approved By: J Fensom	Detail No. R-001-18	Revision: -	
Date: 15/02/13			

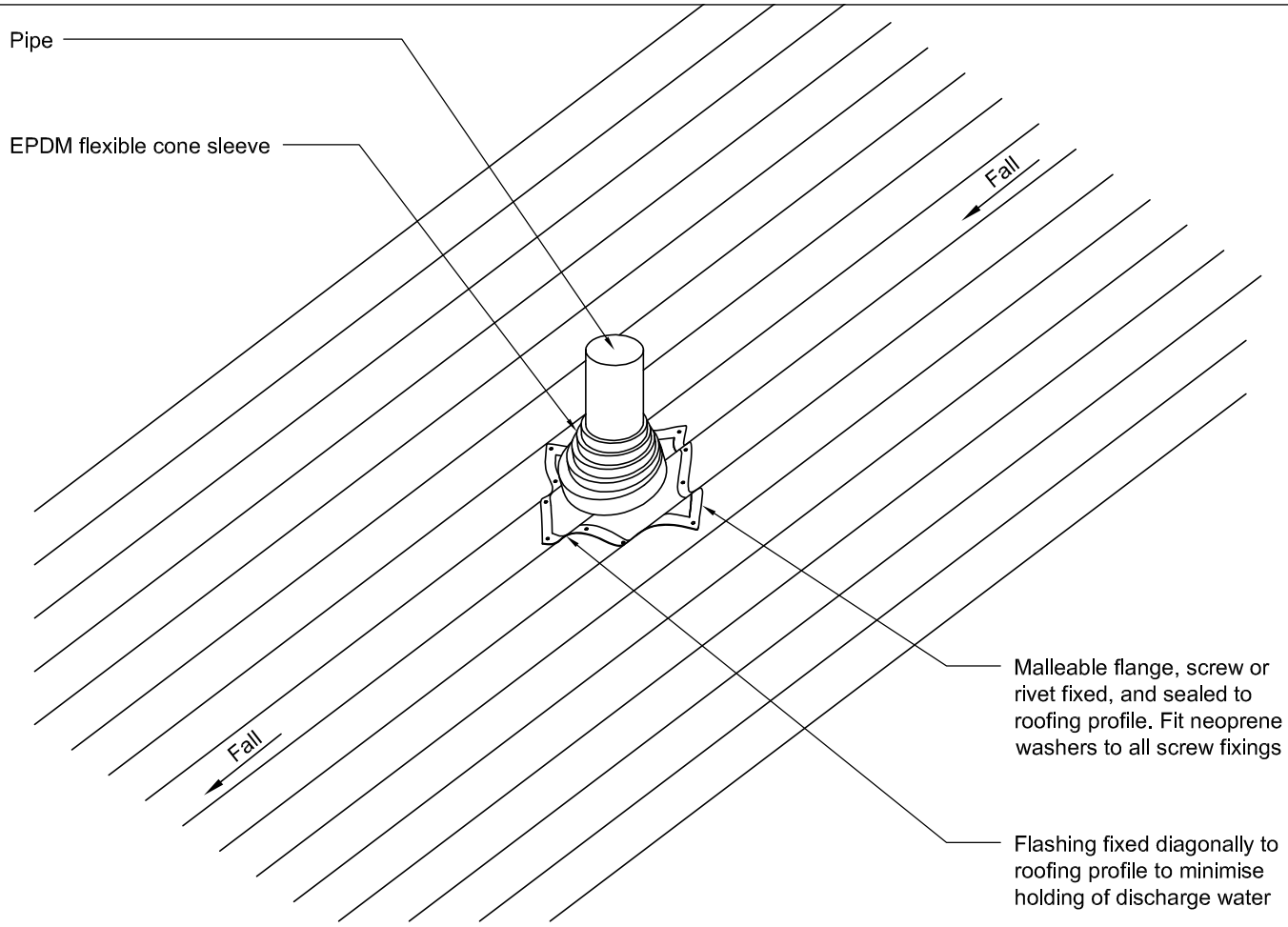

Small Penetration Detail (Cylindrical)

Scale 1:10

General Notes:

1. Indicative structure shown for purposes of illustration only.
2. Confirmation of thickness and coating to cladding/flashings required.
3. For "X, Y, & Z" dimensions, refer to Table 7 of E2/AS1.
4. Refer to installation information for fixing requirements
5. Suitable for pipes up to 85mm diameter.
6. Max. roof pitch for this flashing 45°, minimum pitch 10° if base of flange covers one or more complete troughs.

File Downloads
(click icons to download)

AutoDesk DWG Format
AutoDesk RVT Format
PDF Format

CalderStewart

Profile Type:	Corrugate		
Approved By: J Fensom	Detail No. R-001-19	Revision: -	
Date: 15/02/13			

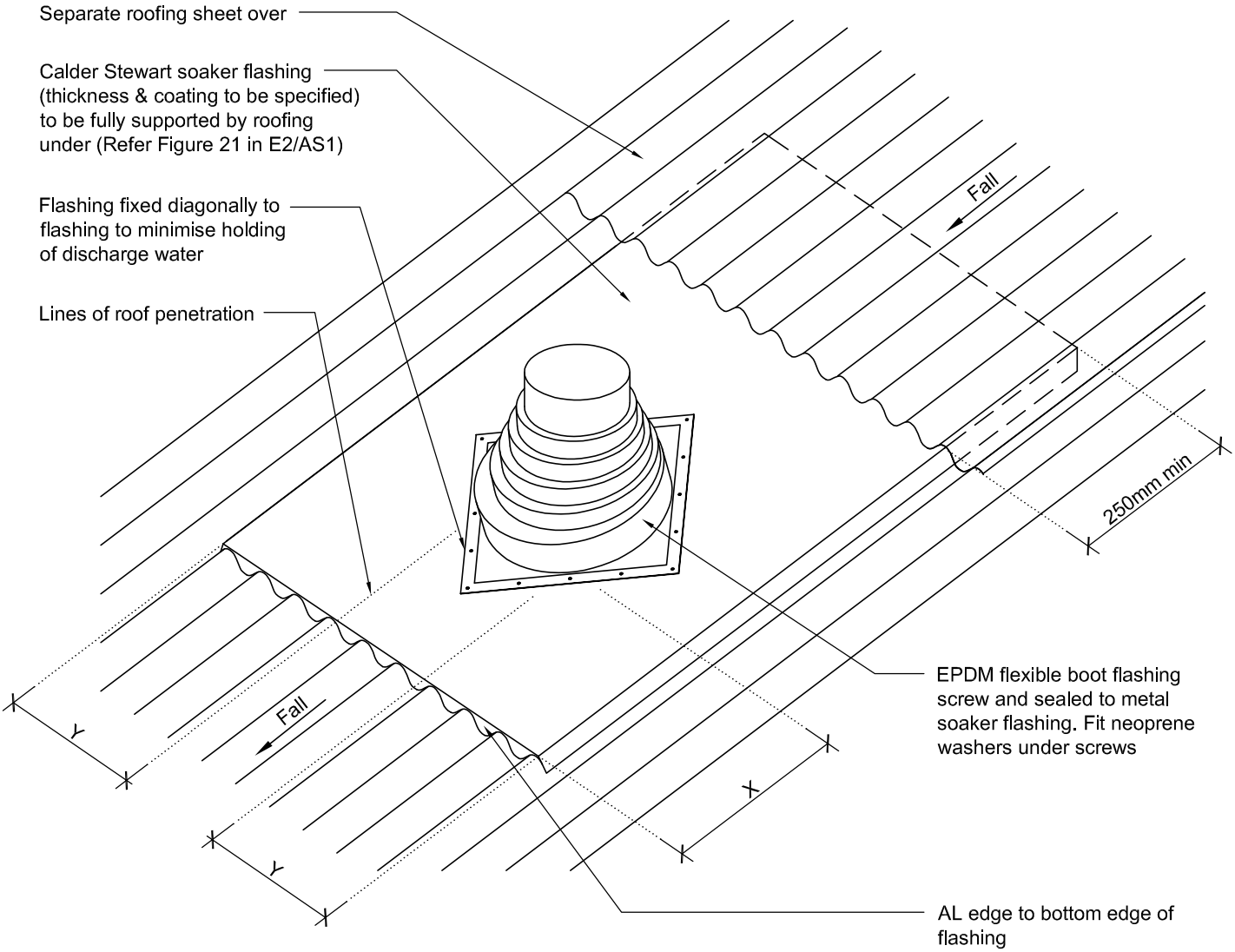

Large Penetration Detail (Cylindrical)

Scale 1:10

General Notes:

1. Indicative structure shown for purposes of illustration only.
2. Confirmation of thickness and coating to cladding/flashings required.
3. For "X, Y, & Z" dimensions, refer to Table 7 of E2/AS1.
4. Refer to installation information for fixing requirements
5. Suitable for pipes 60mm to 500mm diameter.
6. E2/AS1 Suitable only for roof pitches of 10º or more, as these are soaker type flashings.

File Downloads
(click icons to download)

AutoDesk DWG Format
AutoDesk RVT Format
PDF Format

CalderStewart	Profile Type: Corrugate		
	Approved By: J Fensom	Detail No. R-001-20	Revision: -
	Date: 15/02/13		

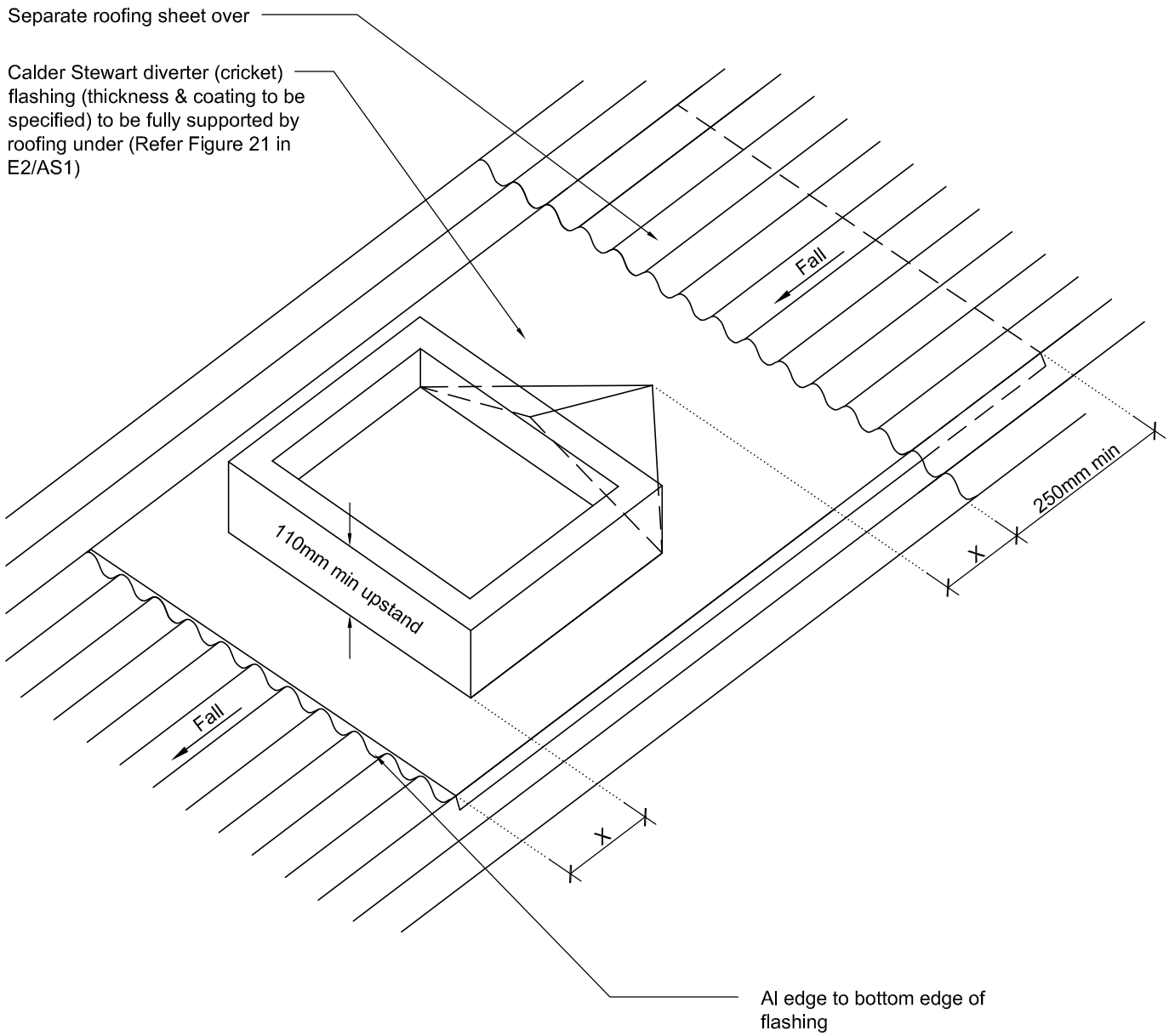

Large Penetration Detail (Rectangular)

Scale 1:10

General Notes:

1. Indicative structure shown for purposes of illustration only.
2. Confirmation of thickness and coating to cladding/flashings required.
3. For "X, Y, & Z" dimensions, refer to Table 7 of E2/AS1.
4. Refer to installation information for fixing requirements
5. Suitable for penetrations up to 1200mm wide.
6. Suitable for minimum roof pitch of profile.

File Downloads
(click icons to download)

AutoDesk DWG Format
AutoDesk RVT Format
PDF Format

CalderStewart

Profile Type:			
		Corrugate	
Approved By: J Fensom	Detail No.	R-001-21	Revision: -
Date: 15/02/13			

Keeping a roof over New Zealander's heads since 1955.

Calder Stewart Roofing and its diverse product line enjoys broad acceptance and brand recognition among architects and builders nationwide. With a history spanning over a generation, we continue to keep pace with their unique protective and decorative requirements. Our strong commitment to quality engineering, innovative product development and providing expert advice tells the story of our success.

INVERCARGILL
120 Bond Street
PO Box 1400
Invercargill
Ph: (03) 214 5544
Fax: (03) 214 5577

CHRISTCHURCH
20 Sir James Wattie Drive
Hornby Christchurch 8442
Ph: 0800 – 776 884
Fax: 0800 – 438 768

DUNEDIN
10B Strathallan Street
PO Box 1027
Dunedin 9054
Ph: (03) 479 0658
Fax: (03) 455 4196

CROMWELL
30 McNaulty Road
Cromwell 9310
Ph: (03) 445 3303
Fax: (03) 445 3304

Technical Support
03 214 5544

Technical Support Email
info@roofer.co.nz

Calder Stewart Roofing

visit Calder Stewart Roofing on the web @
www.roofer.co.nz

© Calder Stewart Roofing 2015

Installation Procedure and Warranty

for Level entry and sill edge models

February 2014
Version 14

IMPORTANT: Read and understand all instructions before installing shower
Approved waterproofing systems/tile adhesives on pg2

Install shower base	Plumber/shower installer
Waterproofing	Water proofer/Tiler
Install wall channel	Waterproofer/Tiler
Tile walls and floor	Tiler
Install shower	Shower Installer
Warranty	Home Owner

General shower information

- Due to weight of panels, 2 people may be needed to install shower
- Walls must be plumb to a 2% tolerance where shower is to be installed
- Floor must be square to wall to a 0% tolerance
- Position of framing must be able to be established

Glass safety

- Keep glass standing upright
- Always sit glass on a padded surface, i.e. polystyrene
- Keep glass level with ground to prevent hitting corners
- If toughened safety glass hits a hard surface or is hit by a hard object, it may shatter
- It is recommended that safety gloves and glasses are worn during installation.

Package contents (where applicable):

SHOWER PACKAGE

- Glass Door with 2 Cut-outs
- Glass Return
- Glass Return with 2 Cut-outs
- Overhead glass support
- Polyvinyl Drip Seal
- Brace Brackets
- Hex Keys
- Hinges
- Silicone spatula
- Setting blocks
- Door handle
- Silicone
- Timber Door Wedges
- Small Timber wedges
- Rubber wedge seal
- Stabilizer blocks
- Glass shelves
- Channel insert

BASE PACKAGE

- Shower base
- EasyClean waste
- Adhesive
- Adhesive trowel
- Masking tape

CHANNEL PACKAGE

- Wall channel
- Screws/bits
- Channel connectors
- Silicone
- SafeFix adhesive

LEVEL ENTRY KIT

- Angle section (x 1,2 or 3)
- Silicone adhesive

YOU WILL NEED:

- Adhesive Application Gun
- Level (2m and 1m)
- Drill
- Screwdriver
- Spray bottle/soapy water

Approved Waterproofing systems and Tile Adhesives as stated below must be used with the base system. Should an alternative system be required, please contact Crest Customer Service to confirm suitability

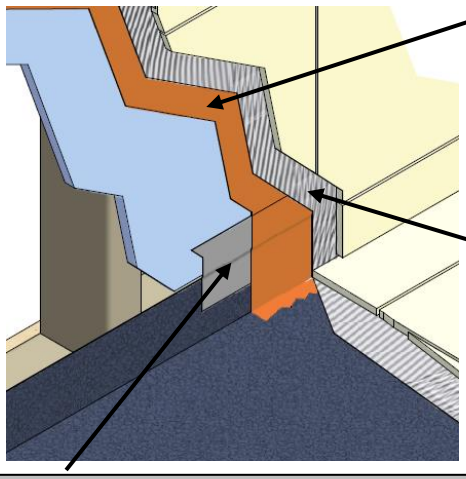

Movement Control Joint Band –supplied with approved Waterproofing system

Approved Waterproofing Systems		
Waterproofing System	Supplier	Suppliers Ph.
Mapegum WPS	Mapei	(09) 921 4083
Dampfix Gold	Bostik	(09) 257 5847
WPM001	Ardex	(03) 373 6904
AQUAFIN	Equus	(03) 578 0214
Wet-seal Fibrecoat	Wet-seal	0800 436 000
Duroset Duroqik	Waterproofing Systems	(03) 366 9495
Approved Tile Adhesive		
Tile Adhesive	Supplier	Suppliers ph
Keraflex Maxi S1 Granirapid	Mapei Mapei	(09) 921 4083
Conflexgold	Bostik	(09) 257 5847
Abaflex X77	Ardex Ardex	(03) 373 6904
Techbond 14	Flexco	(09) 2686970
UNIFIX	Equus	(03) 578 0214

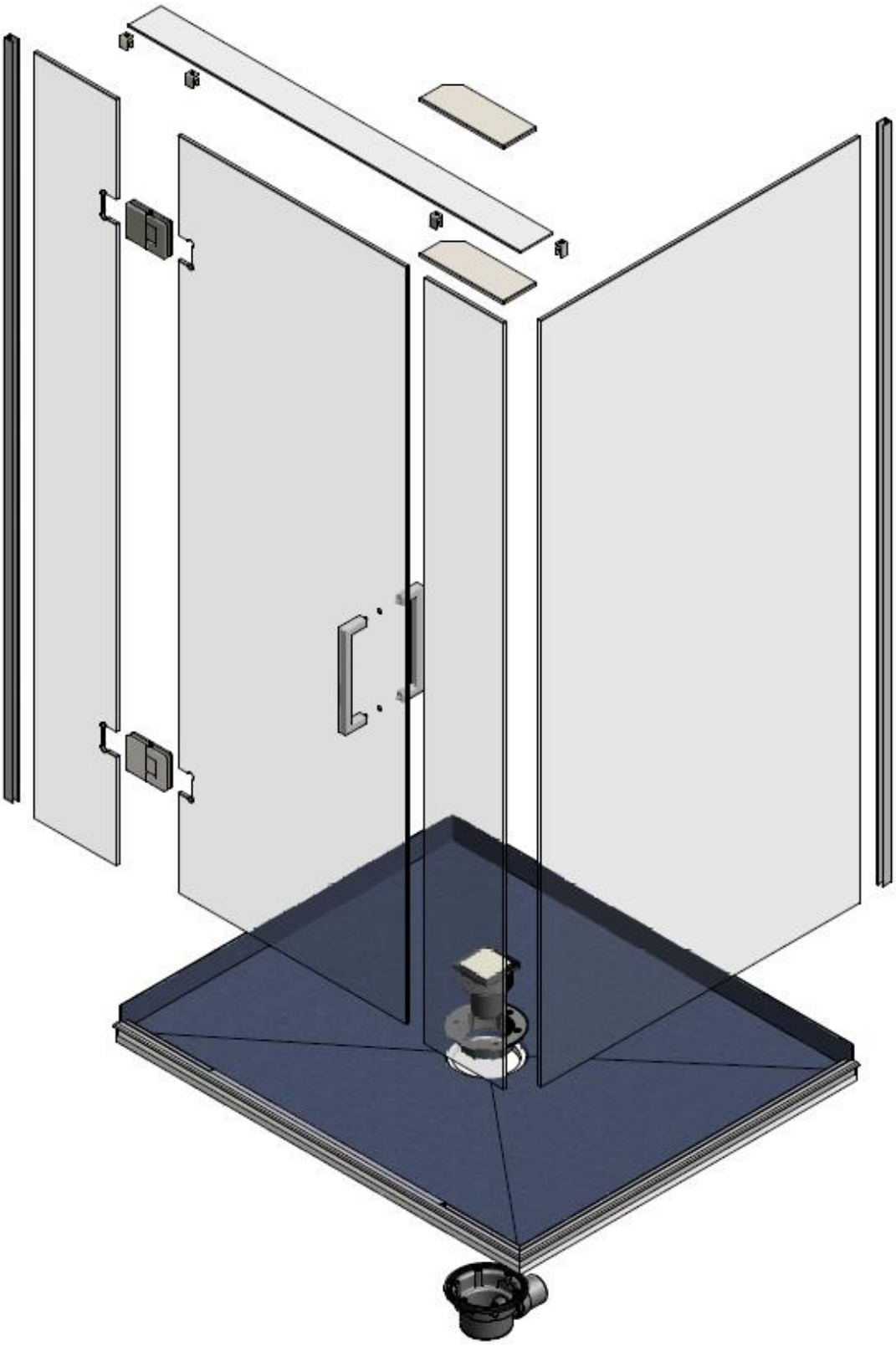

SHOWER BASE

INSTALLING WASTE and BASE

Note: Base and waste installation should be done by a qualified plumber or shower installer.

AVA base can be installed directly onto Particle board, plywood, concrete. For level entry bases, lower floor by approx 35mm (fig 1a). The remaining space for tiling etc should be approx 17mm (fig 7a)
IMPORTANT: Double check the depth required once tile thickness is known

Check floor is level to 1mm tolerance. Where floor is out of level by more than 4mm, use Floor Levelling Compound (fig1b) to level floor and leave to cure as per manufacturer's instructions prior to installing shower base.

1. Remove polystyrene block. Place waste body in position ensuring that it is aligned with hole in base. Connect waste body to waste outlet (fig2). Upstand should be flush with wall lining.

2. Ensure waste seal (red) is positioned properly in its recess (fig2)
3. Sweep floor clean of dust.

4. Place base in position and check if level (fig3)

5. Confirm that waste body is correctly aligned with centre of base hole, before removing base.

6. Apply large daubs of adhesive supplied in a grid pattern 20cm apart to the bottom of the shower base. Each daub of adhesive needs to be at least 6mm thick. Once even pressure is applied the base will "self-level."

7. Install base in final position and weigh down. Confirm that shower base is level and upstand is flush with wall lining. Ensure weight remains on base for 24 hrs.

8. Place top waste clamp into recess and down into waste body then fasten top clamp in place (fig 5) by fixing screws. Screws need to be firm but not over-tight.

9. Screw waste lid onto top clamp (fig 6). Put large polystyrene block back in position to protect base surface

Note: Do not remove protective lid label on waste cover. [Fig 6]
IMPORTANT: mask floor channel to protect from damage

Fig 1a

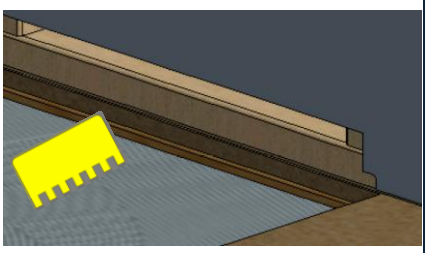
Fig 1b

Fig 2

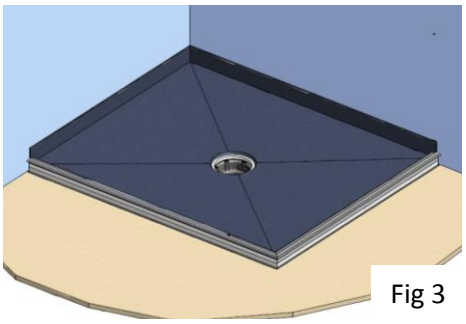
Fig 3

Fig 4

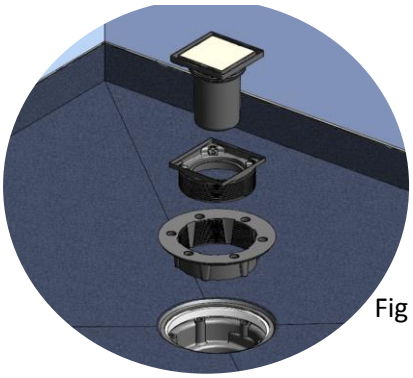
Fig 5

Fig 6
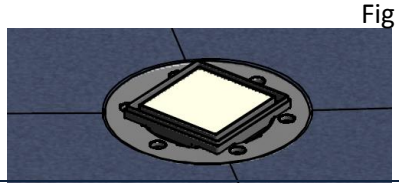

WATERPROOFING METHOD:

Approved Waterproofer to install approved wall membrane as instructed by supplier and in accordance with diagrams below

Notes

- AVA base suits 6-12mm tiles. For sill edge applications, the exterior sill upstand may require tiles to be packed out for thinner tiles. Tiles must be perfectly flush with tile trim edge. See red dotted line (fig 7b)
- Level entry applications require Level Entry kit flashing (shown as green angle) to be silicone fixed to base. The waterproofing outside the shower will lap onto this flashing as shown (fig7a)
- Base is ready to be tiled or <u>waterproofed onto</u> without the need for any prior priming, sanding or other treatment
- Approved waterproofing system will include a joint expansion bandage which is applied as shown below (fig9).
- Waterproofing will line up with <u>outside of wall channel</u> as a minimum (fig8).
- Wall channel will go to height of 1960mm from base surface. Waterproofing will also go this height as a minimum or higher if required (fig8)

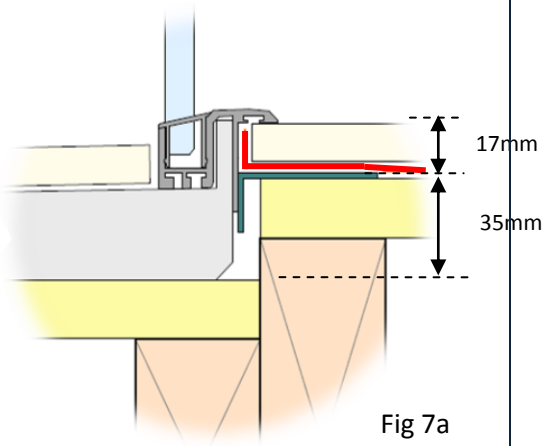

Fig 7a

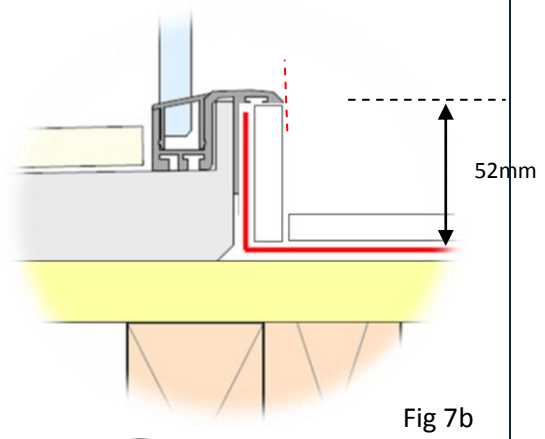

Fig 7b

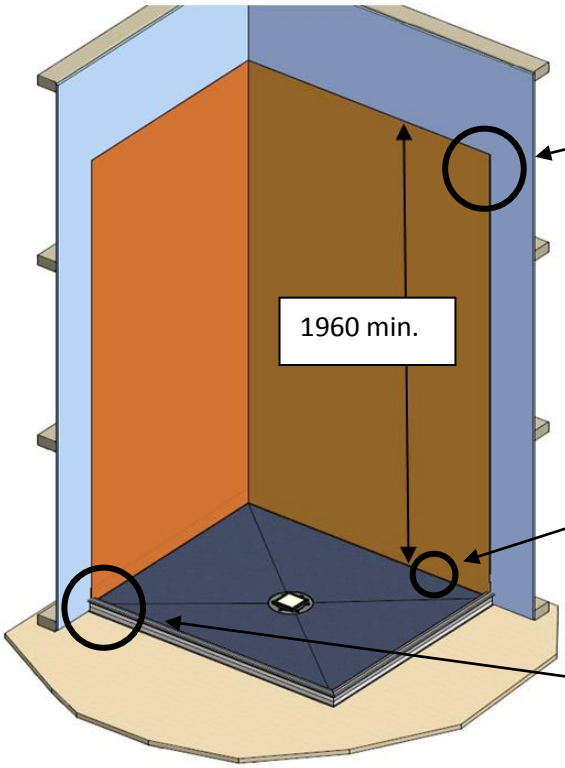

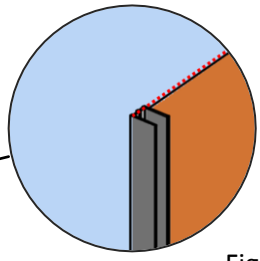

Fig 8

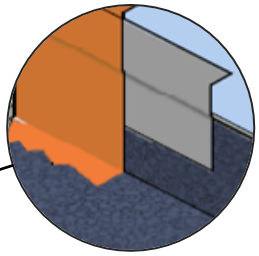

Fig 9

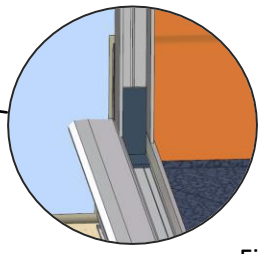

Fig 10

INSTALLING WALL CHANNELS

10. Use a 2 metre level to check wall is within 2-3mm of plumb.

11. Place channel connector temporally into floor channel and then position wall channel (fig 10). Note angled end of channel heads downwards into shower.

12. When plumb, drill 2 holes (3.5mmD) in wall channel, lining up with framing locations (fig 11). The top hole should be within 100mm of top of channel and the second hole within 1000mm of top of channel. No screws will be required lower than 1000mm up from floor channel.

13. Remove dust from holes and from inside floor channel.

14. Clean underside of wall channel with a dry rag before running a thick bead of silicone along the underside (fig12). Remove channel connector, silicone inside floor/wall junction and reinsert (fig10).

15. Inject silicone into and around screw holes (fig11). Ensure wall channel is plumb, then screw in place.

    Important: Wall channel must be screwed into solid framing.

16. From inside shower, apply a bead of silicone as an extra seal between whole length of wall channel and waterproofing.(fig13)

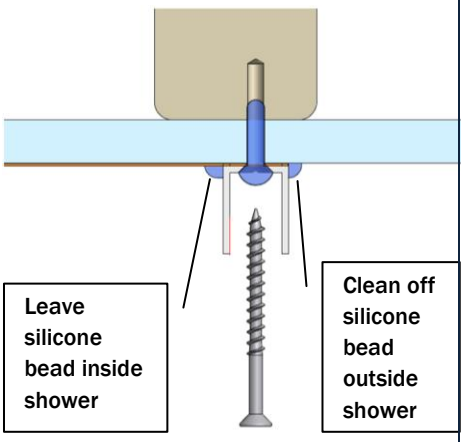

Fig 11

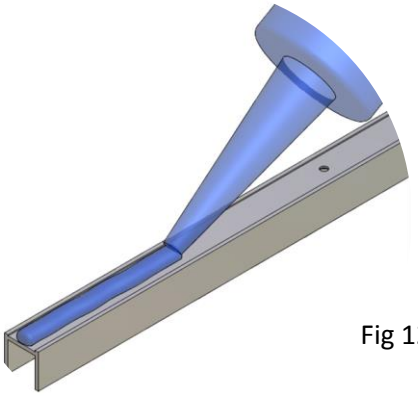

Fig 12

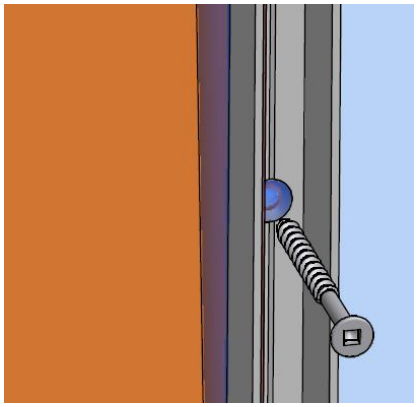

Fig 13

TILING SHOWER

The shower base is waterproof and the surface is ready to be tiled <u>without the need for any prior priming, sanding or other treatment</u>. The AVA base suits 6-13mm tile thickness. Steps 17-20 below are all to be undertaken as per standard trade practice.

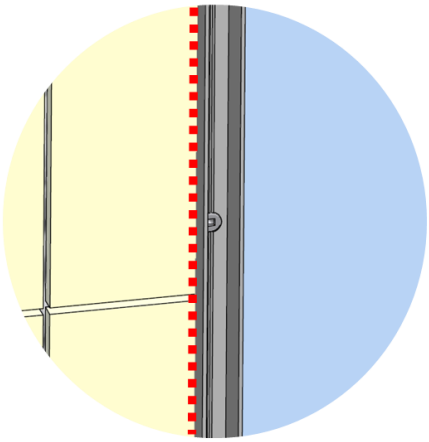

Fig 15

METHOD

17. **Mask** aluminium channel and remove polystyrene block. The shower base surface must be clean, dry and free of any foreign matter.

18. Use one of the approved tile adhesive systems and mix and apply tile adhesive as instructed by the supplier.

19. Silicone between tile edge and wall/floor channel (fig15 see red line)

20. Adhere tiles to outside vertical face of base using supplied SAFEFIX adhesive (fig17 - see red line showing adhesive). Silicone above and below this tile as per step 19. Tile face should line up with front of tile trim.

    Recommended: Vertical tile joints on sill edge (fig 17) should be siliconed rather than grouted.

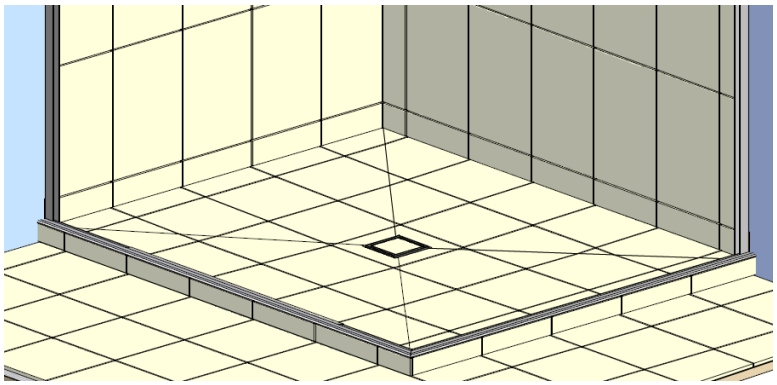

Fig 18

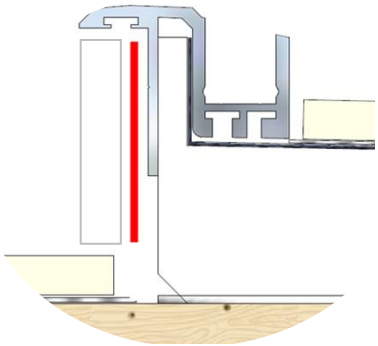

Fig 17

Note: BRANZ <u>Good Tiling Practice</u> states that a movement control joint "…..be carried right through the tiles to the exterior face…" This requires that a horizontal control joint in tiles is located at the top of the base upstand (fig19). Movement in the building is then accommodated without creating stress in the tiled finish.

BRANZ also notes that "… Movement control joints must not be omitted because of aesthetic requirements…."

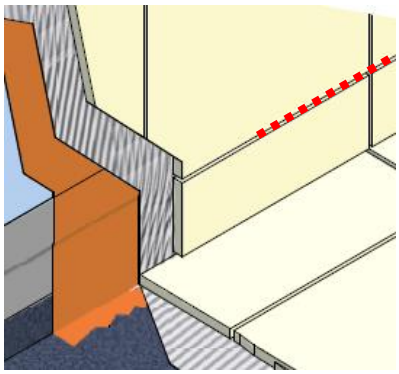

INSTALLING SHOWER

21. Place 2mm setting blocks in bottom of floor channel (fig20). Glass must always be resting on setting blocks - not straight onto channel.

    Note: Partially remove packaging from door panel and measure door width (toughened glass can vary up to 2mm from stated size). Alter doorway gap to suit if necessary.

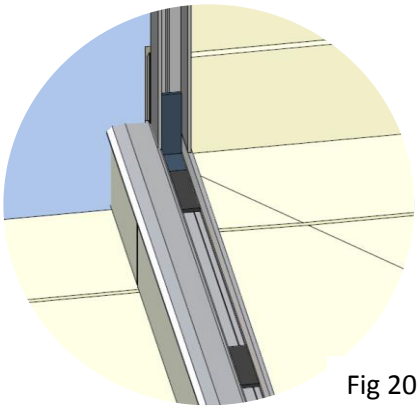

Fig 20

DRY FIT PANELS

22. Carefully lift PC panel (fixed panel with hinge cut-outs) into floor channel and wedge into position from outside shower. Check panel is level and plumb (fig21) and add extra setting blocks if necessary to level it before temporally securing in place with small timber wedges (fig22)

23. Repeat with remaining panels, checking that they are level with each other and door tolerance is correct from top to bottom (fig21).

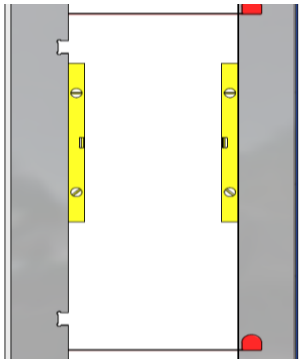

Fig 21

INSTALL PANELS

24. When panels are correctly aligned, remove Panel 1 - see fig 27, and run a thick line of silicone down inside wall of channel (fig23)

25. Slide glass panel into position (fig24) and use small timber wedges (fig25) or a flat plastering blade to slide glass panel back to inside edge of channel and against silicone. Ensure panel is still level and plumb.

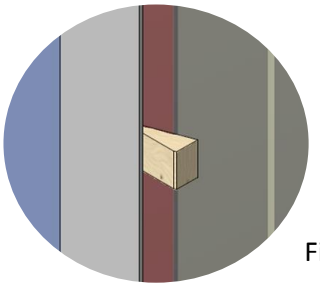

Fig 22

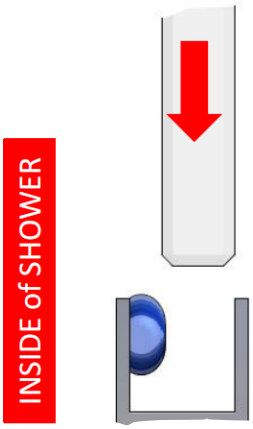

Fig 23

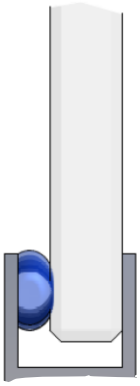

Fig 24

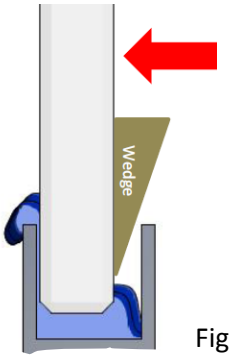

Fig 25

26. Starting at top of wall channel, from <u>outside</u> shower, insert rubber wedge seal into gap, removing timber wedges as you go. Leave wedge protruding 40mm at top to cut off later. Corner join in rubber wedge must be well siliconed as its installed. Use a roller or rounded piece of timber to help install rubber wedge.

    Important: Rubber wedge must be pressed into channel lightly from top to bottom before pushing right in. This method ensures rubber wedge does not get stretched and then shrink later.

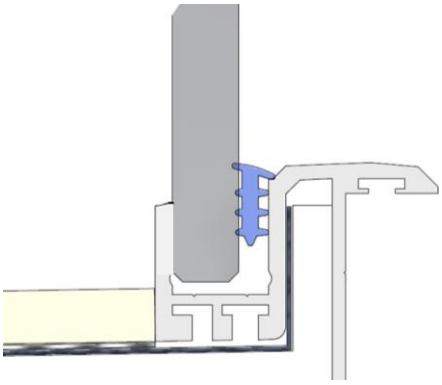

Fig 26

27. Repeat with floor channel (fig 26) Cut off excess rubber wedge then fill top of wall channel with silicone.

28. Repeat steps 24-26 with remaining panels in order as shown in fig27.

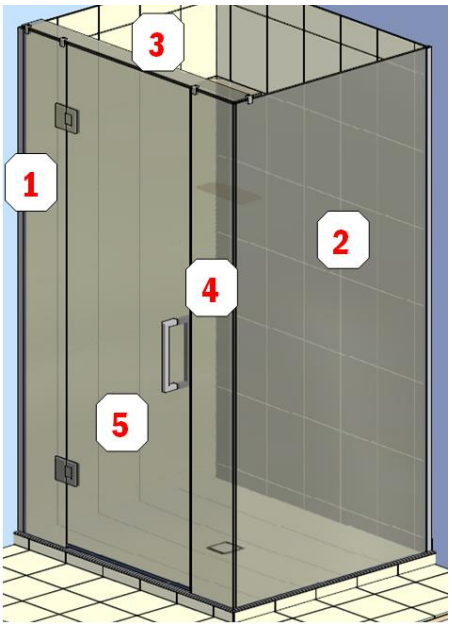

Fig 27

29. Fasten chrome brackets to overhead glass brace and sit in place above door. When panels are aligned correctly tighten grub screws (fig28)

30. Spray channel/glass with slightly soapy water then use spatula provided to clean off excess silicone (fig34). <u>Repeat this process 3 times</u>. Use minimal water then wipe off water with lint free cloth.

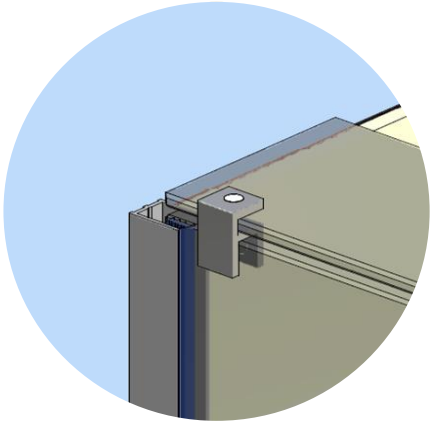

Fig 28

31. 'Glass to glass' joins only (fig27 panel 4). Apply a continuous bead of silicone up the edge of the 2nd panel. Carefully put panel back into channel and bring them together leaving a 1mm silicone line between the panels. Hold in place using masking tape or overhead support then clean up silicone (fig 29-34)

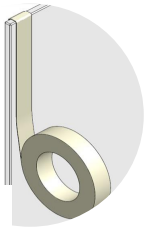
Fig 29

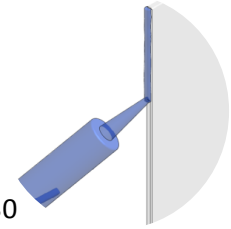
Fig 30

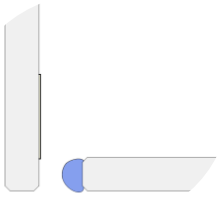
Fig 31

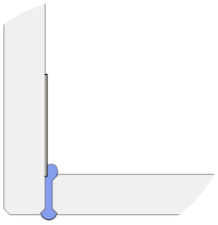
Fig 32

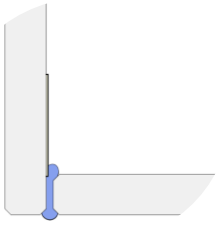
Fig 33

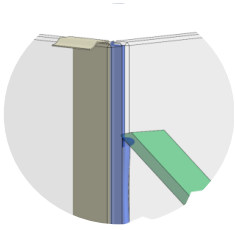
Fig 34

32. Check threshold insert is 4mm larger than actual door width and then insert in position (fig35).

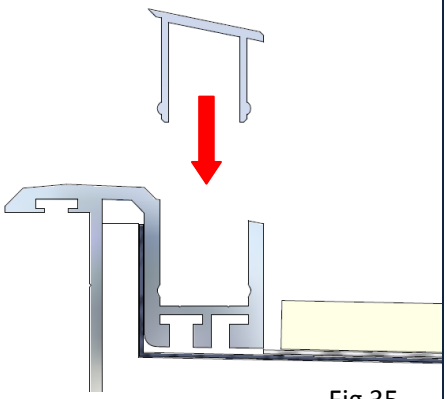
Fig 35

Professional Hint:

Always use spatula when finishing silicone joints. Using a bare finger will promote mould growth. Remember – an otherwise quality job is often spoiled by careless siliconing.

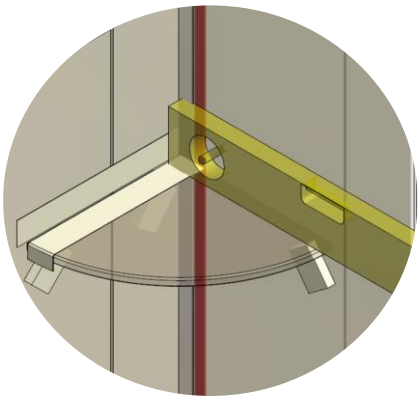

INSTALLING SHELVES

<u>IMPORTANT: Protect floor until Xbond adhesive has cured in case of the unlikely event that shelf/shower is disturbed and shelf falls off.</u>

The Shower Shelf can be installed in any corner (glass/tile or tile/tile). If 2 shelves are installed in the same corner, ideal shelf heights off the floor are 1200 and 1600. When installed in different corners, an ideal height is 1400 off the floor.

When installing on an acrylic liner, check with acrylic manufacturer first to ensure warranty will remain valid. Xbond does not harm or adversely affect acrylic. When installing on Seratone or similar pre finished wall board, check with manufacturer first to ensure warranty will remain valid.

33. Wipe surfaces clean with a dry cloth.

34. Place 3 stabilizer blocks on wall, check for level, then mask the shelf and wall (fig36).

35. Put a thin bead of silicone down both edges of shelf, place on stabilizer blocks and gently push into corner (fig37). Leave stabilizer blocks in place for a minimum of 24 hrs.

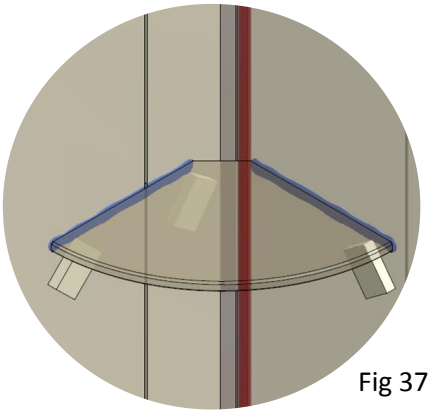

Fig 37

INSTALLING DOOR — if applicable

Each hinge plate requires a rubber gasket to protect the glass. As a minimum,

36. Fasten hinges to return panel and place in closed position. Hex screws should face into shower and pivot point of hinge should be on door panel (fig38).Hinges require 1 thin gasket behind each plate to stop glass from contacting hinge metal.

37. Place large timber wedges in door way (on a cloth to protect aluminium). From inside of shower, lift door panel onto wedges and fasten to hinges. Fully tighten all hex screws but do not over tighten.

38. Install door handle with grub screws on outside of shower (fig39). Ensure screws are not over tightened

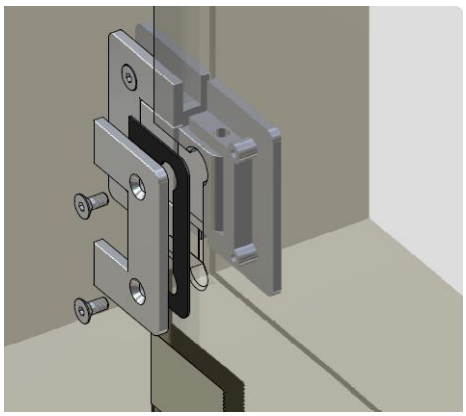

Fig 38

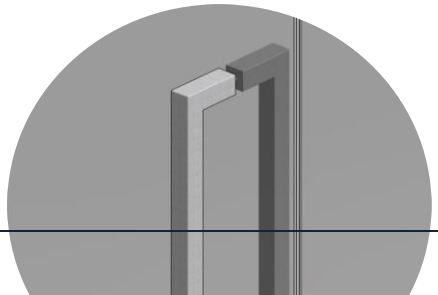

Fig 39

COMMISSIONING

Note: Door may drop at top up to 1mm after door wedges are removed.

39. Remove packers from underneath door. Open and close door a few times and check the following:

    - Hinges are quiet – if not, open door half way, loosen hex screws slightly then re-tighten hinges.
    - Top of door closes in line with return panel – if not, put packers underneath door and adjust hinges.
    - Door springs closed to line up with return panel – if not, adjust hinges. Top and bottom hinges must be treated the same.
    - Top of door is level with return panel.

40. If required, slide polyvinyl drip seal onto bottom of door and trim fin as shown (fig40). Seal should just miss floor channel insert when door is shut. If gap between door and floor is too large, seal can be lowered up to 6mm. Seal fin can also be trimmed if too long.

41. Clean glass and ensure no silicone residue remains on glass, channel or surrounding area

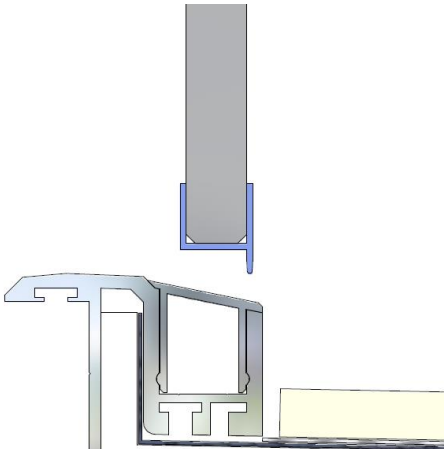

Fig 40

CARE AND MAINTENANCE

You can keep your shower looking its very best by following a few simple guidelines:

- Clean shower twice weekly using a mild detergent in warm water and a soft lint free cloth. Ensure aluminium channels, hinges and handle are properly cleaned.
- A quick wipe down with Shower Squeegee after each use will become a matter of habit rather than a chore and will prohibit water staining the glass.
- Do not use abrasive cleaners or high strength chemicals on your shower.

AVA Warranty

Crest Shower Systems warrants that when installed as per the supplied instructions, the AVA shower system will be free from manufacturing defects for a period of 25 years from the date of sale. This means that apart from the typical surface splash, no water will be allowed to leak into the building structure for a minimum period of 25 years.

25 YEAR WARRANTY	10 YEAR WARRANTY
AVA waterproof shower base	Glass screens Hardware Aluminium channel EasyClean waste

All products supplied by Crest Shower Systems exceed the requirements of the New Zealand Building Code and all glass is manufactured to meet AS/NZS2208 1996 Grade A Safety Glass and is permanently marked as such in accordance with the code.

Crest Shower Systems will supply replacement parts or product at its discretion, free of charge where product is covered by this warranty and proof of defect has been received within 100 days of first appearance. To ensure warranty remains valid the supplied care and maintenance instructions must be adhered to and Crest Warranty form supplied with the product must be completed and returned at time of purchase (hard copy or online). Warranty is non-transferable.

Crest will be liable for the replacement of products or components including their installation, or for an equivalent product including its installation, should the supplied product or component be declared defective by an authorised Crest Shower Systems representative. Beyond this Crest will not be liable for any damages including incidental or consequential damages related to the use of this product.

Warranty does not apply to the following situations:

- Shower has been improperly installed
- Shower has been misused or damaged
- Shower damaged or defective prior to installation
- Supplied instructions were not adhered to during installation. Note: Discretion must have been used at all times by installer as each situation may vary

INSTALLATION WARRANTY
Your approved Crest shower installer should provide you with a written 5 yr minimum installation workmanship warranty. Product warranty applies regardless of who has installed the shower.

WARNING

This AVA shower has just
been installed

PLEASE DO NOT WORK IN OR
AROUND THE SHOWER UNTIL

/ /

Any queries feel free to ring me on:

Best regards
Your Shower Installer

crest shower systems

Freephone. 0800 4040 42
email. sales@crestshowers.co.nz
www.crestshowers.co.nz

MAPEI

IN COMPLIANCE WITH EUROPEAN STANDARD EN 1504-2 (C) PRINCIPLES PI-MC-IR MAPEI SURFACE PROTECTION SYSTEMS FOR CONCRETE

IN COMPLIANCE WITH EUROPEAN STANDARD EN 14891 CM02P MAPEI LIQUID-APPLIED WATER IMPERMEABLE PRODUCTS

CE EN 1504-2

CE EN 14891

Mapelastic

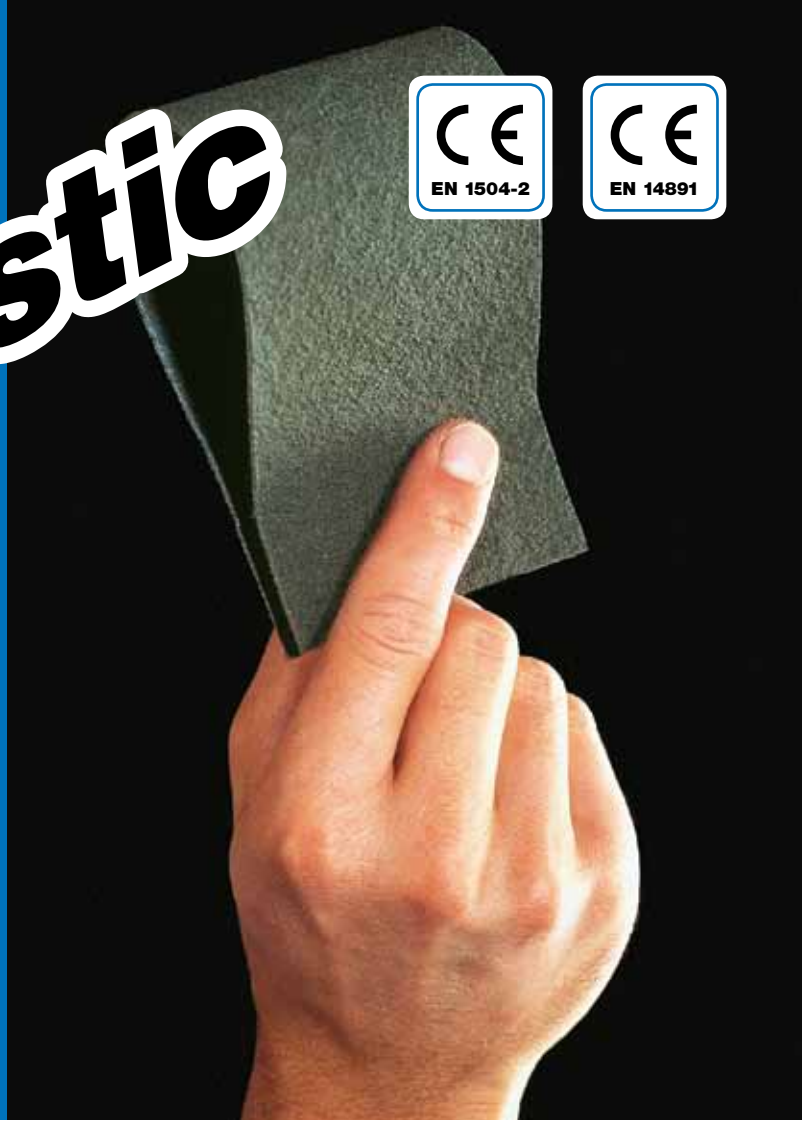

Two-component cementitious mortar, flexible down to -20°C, for waterproofing balconies, terraces, bathrooms and swimming pools

WHERE TO USE

Waterproofing and protection of concrete structures, renders and cementitious screeds.

Some application examples

- Waterproofing of concrete basins used for containing water.
- Waterproofing bathrooms, showers, balconies, terraces, swimming pools, etc. before laying ceramic tile finishes.
- Waterproofing of plasterboard, render or cementitious surfaces, lightweight cement blocks and marine-grade plywood.
- Flexible smoothing layer for light-sectioned concrete structures, including those subjected to minor deformation when under load (e.g. pre-cast panels).
- Protection of renders or concrete with cracks caused by shrinkage, against the infiltration of water and aggressive atmospheric elements.
- Protection, against the penetration of carbon dioxide, of concrete pillars beams and road and railway viaducts repaired with products from the **Mapegrout** range, and structures with an insufficient layer of concrete covering on the reinforcement rods.
- Protection of concrete surfaces which may come into contact with seawater, de-icing salts, such as sodium or calcium chloride, and sulphates.

ADVANTAGES

- Remains flexible at very low temperatures (-20°C).
- More than 20 years experience and more than 300 million m^2 of surfaces successfully waterproofed.
- CE-certified product in compliance with EN 1504-2 and EN 14891.
- Protects the surface of concrete from CO_2 penetration (carbonation) for more than 50 years.
- Resistant to UV rays.
- 2.5 mm of **Mapelastic** represents the equivalent of 30 mm of concrete against the aggressive action of chlorides (w/c ratio 0.45).
- May also be applied on existing coverings.
- Compatible with ceramic, mosaic and natural stone coverings.

TECHNICAL CHARACTERISTICS

Mapelastic is a two-component mortar based on cementitious binders, fine-grained selected aggregates, special admixtures and synthetic polymers dispersed in water, blended according to a formula developed in MAPEI's own research laboratories.
When the two components are mixed together, a free-flowing mix is obtained which may be easily applied, even on vertical surfaces, at a thickness of up to 2 mm in one single coat.
Due to the high content and quality of the synthetic resins, the cured layer of **Mapelastic** remains constantly flexible under all environmental conditions and resistant to the chemical attack of de-icing salts, sulphates, chlorides and carbon dioxide.
Mapelastic has excellent bonding properties to all concrete, masonry, ceramic and marble surfaces, as long as they are sound and sufficiently clean.
This property, together with its resistance to the deteriorating effect of UV rays, a characteristic of this product, ensures that structures protected and waterproofed with **Mapelastic** have a long service life, even if they are located in areas with particularly difficult climatic conditions, in coastal areas with a saline rich atmosphere or industrial areas where the air is particularly polluted.

Mapelastic meets the requirements defined by EN 1504-9 ("*Products and systems for the protection*

Mapelastic

Waterproofing screeds with Mapelastic and Mapeband

Installing ceramic with Kerabond + Isolastic

Private terrace, Cereseto (Alessandria) - Italy

and repair of concrete structures - Definitions, requirements, quality control and evaluation of conformity - General principles for the use of products and systems") and the requirements claimed by EN 1504-2 coating (C) according to the PI, MC and IR principles ("*Protection systems for concrete surfaces*").

RECOMMENDATIONS

- Do not use **Mapelastic** for thick coatings (more than 2 mm per coat).
- Do not apply **Mapelastic** at temperatures below +8°C.
- Do not add cement, aggregates or water to **Mapelastic**.
- Protect from rain and water spillage for the first 24 hours after application.

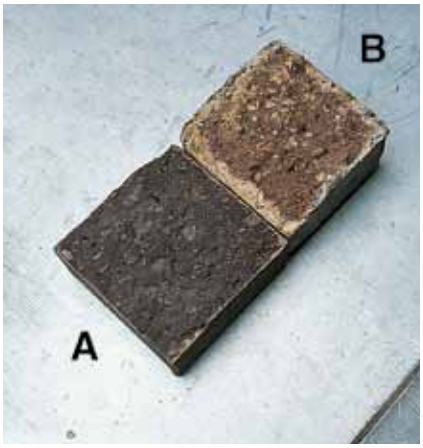

Fig. 2B - Penetration test of chloride ions (UNI 9944). Sample A covered with Mapelastic is not penetrated; sample B, left uncoated, shows an advanced penetration of many mm

- Do not apply **Mapelastic** on unprotected surfaces in swimming pools.

APPLICATION PROCEDURE

Preparation of the substrate

A) Protection and waterproofing of concrete structures and pre-cast units (e.g. pillars and beams for road and railway viaducts, cooling towers, chimneys, underpasses, retaining walls, applications in coastal areas, basins, canals, faces of dams, columns, balcony fronts).
The surface to be treated must be sound and perfectly clean.
Remove all cement laitance, flaky parts and traces of powder, grease, oil and form release agents by sand-blasting, or wash down with high-pressure water jets.
If the structure to be waterproofed and protected with **Mapelastic** is in poor condition, remove the damaged parts by hand or mechanical abrasion or by using a hydro-demolition system or a hydro-scarifier.
The last two techniques, which use high-pressure water, are particularly recommended because the reinforcement rods are not damaged and the structures are not subject to

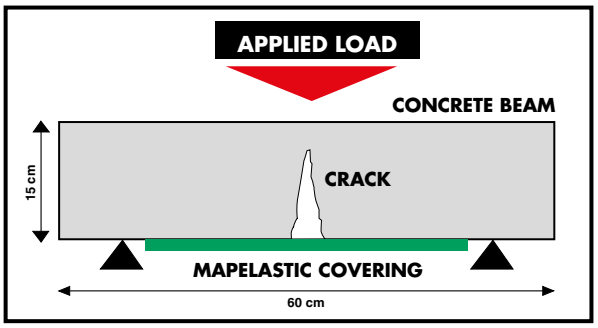

Fig. 1: Protection of a hairline crack with Mapelastic on the underside of a concrete beam subject to flexural stress

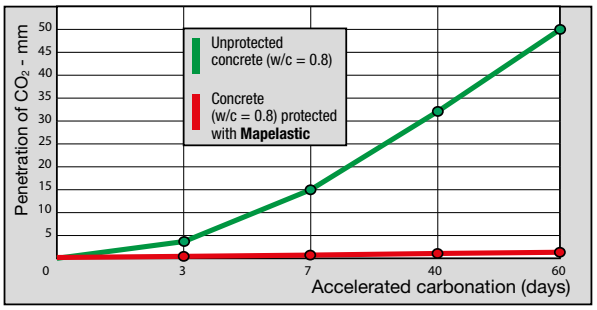

Fig. 2: Protection of Mapelastic against accelerated carbonation (30% of CO_2) on porous concrete

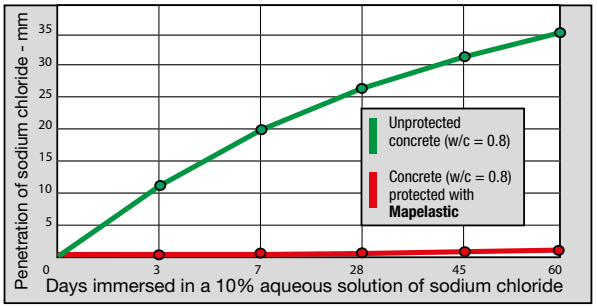

Fig. 3: Protection of Mapelastic against penetration of sodium chloride on porous concrete

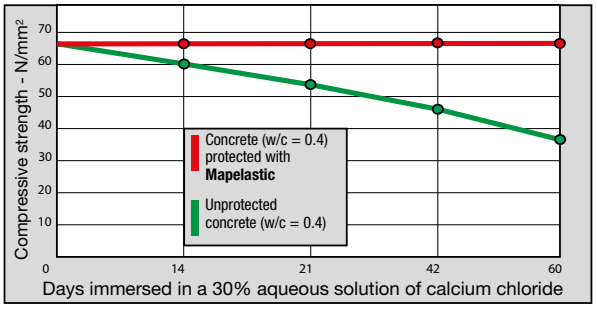

Fig. 4: Protection of Mapelastic against the decrease in mechanical strength of concrete caused by calcium chloride based de-icing salts

vibration which could cause the onset of small cracks in adjacent concrete.
Once the rust has been completely removed by sandblasting, carry out the repair with a pre-blended mortar from the **Mapegrout** or **Planitop** range.
Absorbent surfaces to be treated with **Mapelastic** must be slightly dampened beforehand with water.

B) Waterproofing terraces, balconies and swimming pools

- CEMENTITIOUS SCREEDS:

– setting cracks or cracks caused by plastic or hygrometric shrinkage must be filled beforehand with **Eporip**;

Mapelastic: ***two-component flexible cementitious membrane for waterproofing balconies, terraces, bathrooms, swimming pools and for protecting concrete in compliance with the requirements of EN 14891 and EN 1504-2, EN 1504-9 coating (C) principles PI, MC and IR***

TECHNICAL DATA (typical values)

PRODUCT IDENTITY		
	comp. A	**comp. B**
Consistency:	powder	liquid
Colour:	grey	white
Bulk density (g/cm³):	1.4	–
Density (g/cm³):	–	1.1
Dry solids content (%):	100	50
APPLICATION DATA OF PRODUCT (at +20°C - 50% R.H.)		
Colour of mix:	grey	
Mixing ratio:	component A : component B = 3 : 1	
Consistency of mix:	plastic, trowelable	
Density of mix (kg/m³):	1,700	
Density after application by spray (kg/m³):	2,200	
Application temperature range:	from +8°C to +35°C	
Pot life of mix:	1 hour	

FINAL PERFORMANCE (thickness 2.0 mm)

Performance characteristic	Test method	Requirements according to EN 1504-2 coating (C) principles PI, MC and IR	Performance figures for Mapelastic	
Adhesion to concrete - after 28 days at +20°C and 50% R.H. (N/mm²):	EN 1542	For flexible systems with no traffic: ≥ 0.8 with traffic: ≥ 1.5	1.0	
Thermal compatibility to freeze/thaw cycles with de-icing salts, measured as adhesion (N/mm²):			0.8	
Adhesion to concrete - after 7 days at +20°C and 50% R.H. + 21 days in water (N/mm²):		not required	0.6	
Elasticity expressed as elongation - after 28 days at +20°C and 50% R.H. (%):	DIN 53504 modified	not required	30	
Static crack-bridging at -20°C expressed as maximum crack width (mm):	EN 1062-7	from class A1 (0.1 mm) to class A5 (2.5 mm)	class A3 (-20°C) (> 0.5 mm)	
Dynamic crack-bridging at -20°C of a film of Mapelastic reinforced with Mapetex Sel, expressed as resistance to cracking cycles:		from class B1 to class B4.2	class B3.1 (-20°C) No failure of the test piece after 1,000 crack cycles with movement of crack from 0.10 to 0.30 mm	
Permeability to water vapour - equivalent thickness of air S_D (m):	EN ISO 7783-1	class I: S_D < 5 m (permeable to vapour)	S_D = 2.4	μ = 1200
Impermeability to water, expressed as capillary absorption (kg/m²·h^0.5):	EN 1062-3	< 0.1	< 0.05	
Permeability to carbon dioxide (CO_2) - diffusion in equivalent air layer thickness S_{DCO2} (m):	EN 1062-6	> 50	> 50	
Reaction to fire:	EN 13501-1	Euroclass	C, s1-d0	
		Requirements according to EN 14891	**Performance figures for Mapelastic**	
Impermeability to water under pressure (1.5 bar for 7 days of positive lift):	EN 14891-A.7	no penetration	no penetration	
Crack-bridging ability at +23°C (mm):	EN 14891-A.8.2	≥ 0.75	0.9	
Crack-bridging ability at -20°C (mm):	EN 14891-A.8.3	≥ 0.75	0.8	
Initial adhesion (N/mm²):	EN 14891-A.6.2	≥ 0.5	0.8	
Adhesion after immersion in water (N/mm²):	EN 14891-A.6.3	≥ 0.5	0.55	
Adhesion after application of heat source (N/mm²):	EN 14891-A.6.5	≥ 0.5	1.2	
Adhesion after freeze-thaw cycles (N/mm²):	EN 14891-A.6.6	≥ 0.5	0.6	
Adhesion after immersion in basic water (N/mm²):	EN 14891-A.6.9	≥ 0.5	0.6	
Adhesion after immersion in chlorinated water (N/mm²):	EN 14891-A.6.8	≥ 0.5	0.55	

*Adhesion values according to EN 14891 measured on **Mapelastic** and C2-type cementitious adhesive in compliance with EN 12004*

Application of Drain Vertical on Mapelastic

Laying Mapelastic on Mapenet 150

Laying Granirapid on a terrace waterproofed with Mapelastic

– if thicknesses of up to 30 mm have to be levelled out (to create slopes, fill in dips, etc.) use **Planitop Fast 330** or **Adesilex P4**.

• EXISTING FLOORS:
– existing floors and coverings in ceramic, porcelain tiles, clinker or terracotta, etc. must be well bonded to the substrate and free of substances which could compromise the bonding, such as grease, oil, wax, paint, etc. To remove material that could affect the adhesion of **Mapelastic**, clean the floor with a mixture of water and 30% caustic soda, then thoroughly rinse the floor with clean water to eliminate all traces of caustic soda.

• RENDERS:
– cementitious renders must be sufficiently cured (7 days per mm of thickness in good weather conditions), well bonded to the substrate, resistant and free from all dust and paint;

– dampen absorbent surfaces to be treated beforehand with water.

Close up of the waterproofing layer
In the waterproofing sector, more than in any other sector, it is essential that particular attention is paid to details, which alone are capable of making a difference. This is why **Mapeband TPE**, **Mapeband** and other special accessory articles are indispensable and a determining factor.
Mapeband TPE is used to seal structural joints and joints subject to high dynamic stress, **Mapeband** is used to waterproof check joints, fillet joints between horizontal and vertical elements and special kits from the **Drain** range are used to seal drain holes. It is imperative that special care is in these critical areas after levelling and cleaning the substrate and before applying the cementitious waterproofing mortar.

Preparation of the mortar
Pour component B (liquid) into a suitable, clean container, then slowly add component A (powder) while stirring with a mechanical mixer.
Carefully mix **Mapelastic** for a few minutes, making sure that no powder remains stuck to the sides or the bottom of the container.
Keep stirring until a perfectly homogenous mix is obtained.
Use a low-speed mechanical mixer for this operation to avoid too much air being dragged into the mix.
Do not prepare the mix by hand.
Preparation of **Mapelastic** may also be carried out with a mortar mixer, which is usually supplied with mortar sprayers.
If this technique is used, make sure that the mix is homogenous and has no lumps before it is poured into the hopper of the pump.

Manual application of the mortar
Apply **Mapelastic** within 60 minutes of mixing.
Skim the prepared surface to a feather edge with a thin layer of **Mapelastic** with a smooth trowel then, while the first coat is still fresh, apply a second coat to form a final thickness at least 2 mm thick.

When waterproofing terraces, balconies, basins and swimming pools, we recommend embedding **Mapenet 150** alkali-resistant reinforcement mesh in the first coat of **Mapelastic** while it is still wet. The mesh must also be used in areas with either small cracks or in areas which are under particular stress.
After the mesh has been laid, finish off the surface with a flat trowel and apply a second layer of **Mapelastic** when the first one has set (after 4-5 hours).

After applying **Mapelastic**, wait 5 days for curing before laying ceramic tiles.
In favourable climatic conditions and with good temperatures this period may be reduced to 24 hours on damp substrates.

Laying ceramic tiles on Mapelastic
• BALCONIES AND TERRACES:
– bond in place using a C2 class cementitious adhesive such as **Keraflex** or **Keraflex Maxi S1** or, for more rapid setting, a C2F class adhesive such as **Granirapid** or **Ultralite S1 Quick**.

– grout the joints with a CG2 class cementitious product such as **Keracolor FF** or **Keracolor GG** mixed with **Fugolastic** or **Ultracolor Plus**;

– seal the movement joints with a special MAPEI elastic sealant (such as **Mapeflex PU45**, **Mapesil AC** or **Mapesil LM**. Other types of sealant may be required for specific service conditions: please refer to the MAPEI Technical Services Department).

• SWIMMING POOLS:
– bond ceramic tiles in place using a C2 class cementitious adhesive (**Keraflex** or **Keraflex Maxi S1**) or a C2F class rapid adhesive (**Granirapid** or **Ultralite S1 Quick**). For mosaic, on the other hand, use **Adesilex P10** + **Isolastic** mixed with 50% water (class C2TE);

– grout the joints with a CG2 class cementitious product (**Keracolor FF**/ **Keracolor GG** mixed with **Fugolastic** or **Ultracolor Plus**) or with an RG class epoxy product (of the **Kerapoxy** range of product);

– seal the joints with **Mapesil AC** silicone sealant.

Application of the mortar by spraying
After preparing the surface (see paragraph on “Preparation of the substrate”), apply **Mapelastic** with a spray gun with a lance fitting suitable for use with smoothing mortars, at a minimum thickness not less than 2 mm per layer.
If a thicker layer is required, **Mapelastic** must be applied in several coats.
Successive coats must only be applied when the previous one is dry (after 4-5 hours).
In areas with small cracks or which are highly stressed, insertion of **Mapenet 150**

Waterproofing a swimming pool with Mapelastic

Laying ceramic tiles on Mapelastic in a swimming pool

Swimming pool waterproofed with Mapelastic: Scarioni Leisure Centre - Milan - Italy

in the first layer of fresh **Mapelastic** is recommended.
Immediately after laying the mesh, **Mapelastic** must be smoothed off with a flat trowel.
If the mesh needs to be encapsulated, a further layer of **Mapelastic** may be applied with a spray gun.

When **Mapelastic** is used for protecting beams and columns on bridges, railway underpasses and façades on buildings etc., the product may be painted using products from the **Elastocolor** range, which are acrylic resin-based water dispersions and are available in a wide range of colours which may be obtained using the **ColorMap®** automatic colouring system.

If **Mapelastic** is used, on the other hand, to protect horizontal surfaces not used for foot traffic such as flat roofs, it may be painted over with **Elastocolor Waterproof** acrylic resin-based flexible paint in water dispersion. **Elastocolor Waterproof** is available in a wide range of colours obtained using the **ColorMap®** automatic colouring system and must be applied at least 20 days after applying **Mapelastic**.

PRECAUTIONS TO BE TAKEN DURING AND AFTER APPLICATION

- No special precautions need to be taken when the temperature is around +20°C.
- During hot weather, it is advisable to keep the product out of direct sunlight (powder and liquid).
- After application, and in particularly dry, hot or windy weather, it is recommended to protect the surface from rapid evaporation by covering it with sheets.

TECHNICAL PERFORMANCE DATA

The technical data table contains the identification and application data for the product. Figures 1, 2, 3 and 4 illustrate some of **Mapelastic**'s characteristics.

Figure 1 shows the load diagram for evaluating the product's crack-bridging capacity. The sample to which **Mapelastic** was applied, on the underside of the beam, is subjected to increasing loads in the middle. The crack-bridging capacity of **Mapelastic** is determined by measuring the maximum width of the crack in the concrete at the moment **Mapelastic** fractures.
The degree of protection offered by **Mapelastic** to the concrete substrate is not limited to a simple "covering" of subsequent cracks provoked by heavy loads, shrinkage, temperature variations etc. **Mapelastic** itself is also very resistant to chemical attack, as illustrated by the results of the following tests, and offers good protection for the concrete against carbonation and, therefore, subsequent corrosion of the reinforcing rods.

Figure 2 is a graph which compares accelerated carbonation (in an atmosphere of air enriched with 30% of CO_2), and shows how **Mapelastic** is completely impermeable to this aggressive substance (Fig. 5). The **Mapelastic** membrane also protects the concrete from the action of sodium chloride (for example seawater).

Figure 3 shows how **Mapelastic** completely blocks infiltration of salt into the concrete which is, in itself, very porous and may be easily penetrated. **Mapelastic** also provides an impenetrable barrier against calcium chloride ($CaCl_2$) based de-icing salts, which have a destructive action on even the highest quality concrete.

Figure 4 shows the reduction in mechanical resistance (initially 65 N/mm^2) of concrete permanently immersed in a solution of 30% $CaCl_2$. In this case, too, **Mapelastic** offers efficient protection of the concrete, and prevents the salt from carrying out its aggressive and destructive action on the concrete.

Cleaning

Due to the high bonding strength of **Mapelastic**, even on metals, it is recommended to wash work tools with water before the mortar sets. Once it has set, cleaning may only be carried out by mechanical means.

CONSUMPTION

Manual application:
approx. 1.7 kg/m^2 per mm of thickness.
Spray gun application:
approx. 2.2 kg/m^2 per mm of thickness.

NB: *the consumption figures indicated are for a seamless film applied on a flat surface and will be higher on uneven surfaces.*

PACKAGING

Units of 32 kg:
component A: 24 kg bags:
component B: 8 kg tanks.
Upon request, component B may also be supplied in 1000 kg tanks.
Units of 16 kg:
2 6 kg bags and 1 4 kg drum.

STORAGE

Mapelastic component A may be stored for up to 12 months in its original packaging. The product complies with the conditions of Annex XVII to Regulation (EC) N° 1907/2006 (REACH), item 47.

Mapelastic component B may be stored up to 24 months.

Store **Mapelastic** in a dry place and at a temperature of at least +5°C.

SAFETY INSTRUCTIONS FOR PREPARATION AND APPLICATION

Mapelastic component A contains cement that when in contact with sweat or other body fluids causes irritant alkaline reaction and allergic reactions to those predisposed.
It can cause damage to eyes. In case of contact with eyes or skin wash immediately with plenty of water and seek medical attention.
Mapelastic component B is not considered dangerous according to the current regulation regarding the classification of mixtures. It is recommended to wear gloves and goggles and to take the usual precautions taken for the handling of chemicals.
For further and complete information about the safe use of our product please refer to the latest version of our Material Safety Data Sheet.

PRODUCT FOR PROFESSIONAL USE.

Example of Mapelastic applied on a viaduct by spraying

Example of Mapelastic applied on a dam by spraying

Mapelastic

WARNING
Although the technical details and recommendations contained in this product data sheet correspond to the best of our knowledge and experience, all the above information must, in every case, be taken as merely indicative and subject to confirmation after long-term practical application; for this reason, anyone who intends to use the product must ensure beforehand that it is suitable for the envisaged application. In every case, the user alone is fully responsible for any consequences deriving from the use of the product.

Please refer to the current version of the Technical Data Sheet, available from our website www.mapei.com

All relevant references for the product are available upon request and from www.mapei.com

Any reproduction of texts, photos and illustrations published here is prohibited and subject to prosecution

331-4-2015 (GB)

MAPEI®
BUILDING THE FUTURE

DIMENSION SHEET

SHOWER MODEL: LP212
DIMENSIONS: 900mm x 900mm

LP212 | **Square**

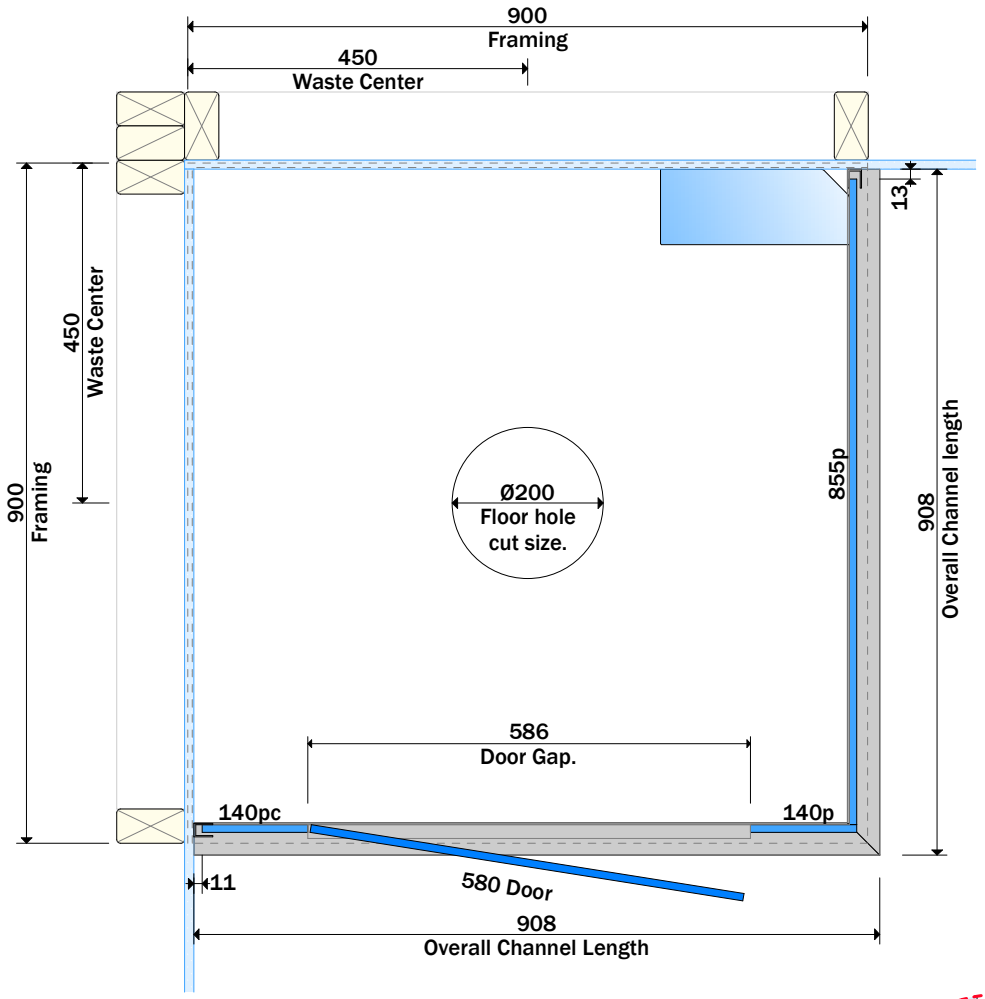

SPECIFICATIONS

HEIGHT: 2000 from floor surface
BASE: Solid resin
GLASS: 10mm Safety Glass NZS2208
WASTE: Easy Clean Tile Insert
FLOOR: Suits concrete and timber floors
TILE: Suits 6 - 13mm tiles
WARRANTY:
Base - 25yr leak proof
Shower - 10yrs
SUPPLIED WITH:
Glass, Hardware, Fixings, Drip seal, Base, Waste

APPROVED WATERPROOFING SYSTEMS:

Waterproof System	Supplier
Mapegum WPS	Mapei
DampfixGold	Bostik
WPM001	Ardex
AQUAFIN	Equus
Wet-seal Fibrecoat	Wet-seal
Duroset	W/P Systems
Duroqik	W/P Systems

APPROVED TILE ADHESIVE:

Tile Adhesive	Supplier
Keraflex Maxi S1	Mapei
Granirapid	Mapei
Conflexgold	Bostik
Abaflex	Ardex
X77	Ardex
Techbond 14	Flexco
UNIFIX	Equus

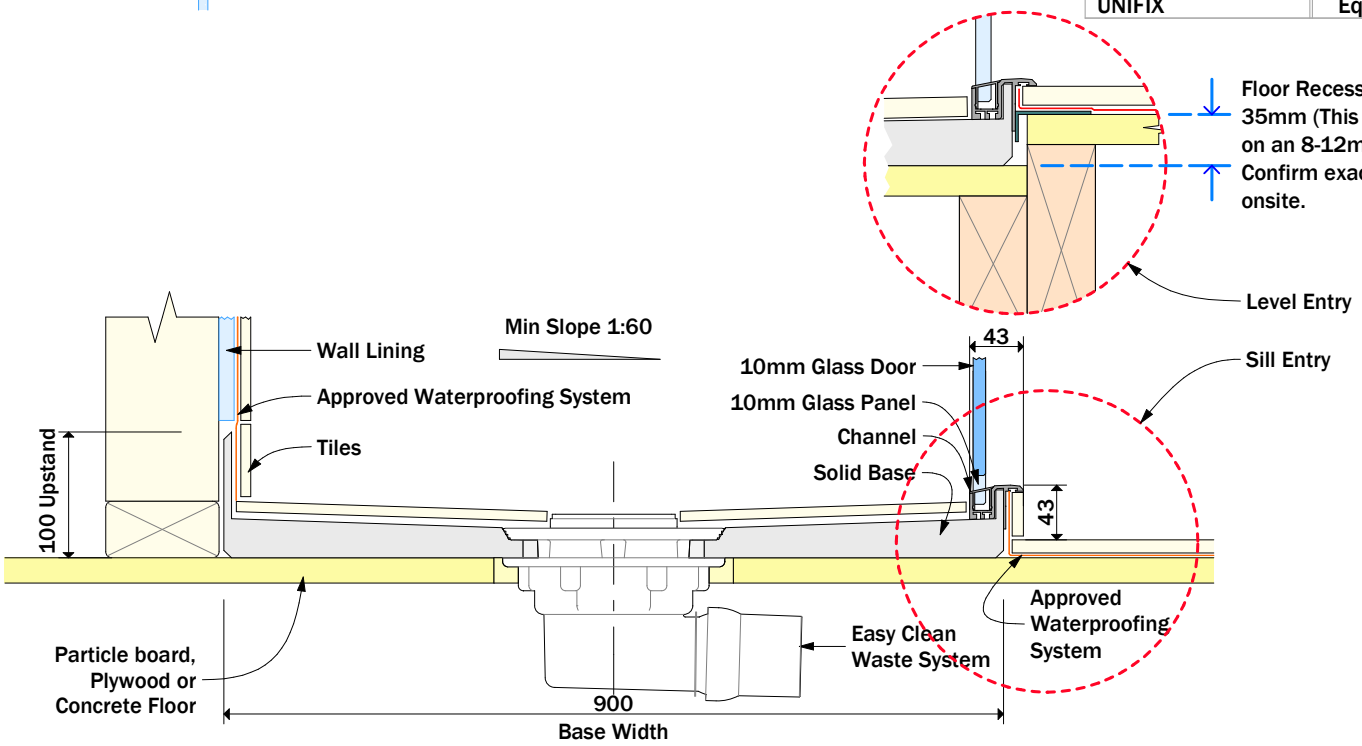

Crest Shower Systems Customer Service 0800 40 40 42

Owner's Guide and Installation Instructions

Electric Domestic Water Heater

Install a Rheem

This water heater must be installed and serviced by an authorised person.
Please leave this guide with the householder.

PATENTS

This water heater may be protected by one or more patents or registered designs in the name of Rheem Australia Pty Ltd.

TRADEMARKS

® Registered trademark of Rheem Australia Pty Ltd.
™ Trademark of Rheem Australia Pty Ltd.

Note: Every care has been taken to ensure the accuracy in preparation of this publication. No liability can be accepted for any consequences, which may arise as a result of its application.

CONTENTS

HOUSEHOLDER - We recommend you read pages 4 to 17.
The other pages are intended for the installer but may be of interest

About Your Water Heater 4

Regular Care 9

Water Supplies 11

Save A Service Call 15

Installation 18

Connections – Plumbing 25

Connections – Electrical 28

Commissioning 31

Draining The Water Heater 34

Warranty 36

ABOUT YOUR WATER HEATER

MODEL TYPE

The Rheem® water heater you have chosen is an Optima™ model.
The Optima model has a temperature adjusting knob on the lower front of the water heater. Optima models are available with either a single heating unit or with twin heating units. (refer to "Single Element Model" on page 7 and "Twin Element Model" on page 7).
The water heater can be installed indoor or outdoor. Optima models have an extended warranty (refer to the warranty on page 36).

Water is stored in a vitreous enamel lined steel cylinder and heated by the electric immersion heating unit. The thermostat controls the temperature. Automatic safety controls are fitted to the water heater to provide safe and efficient operation.

MAINS PRESSURE

The water heater is designed to operate at mains pressure by connecting directly to the mains water supply. If the mains supply pressure in your area exceeds that shown on page 19, a pressure limiting valve must be fitted. The supply pressure should be greater than 350 kPa for true mains pressure operation to be achieved.

HOW HOT SHOULD THE WATER BE?

The water heater features an adjustable thermostat, which allows you to choose the most suitable temperature for your hot water needs. Refer to "Temperature Adjustment" on page 5.

To meet the requirements of the G12 Building Code the temperature of the stored water must not be below 60°C.

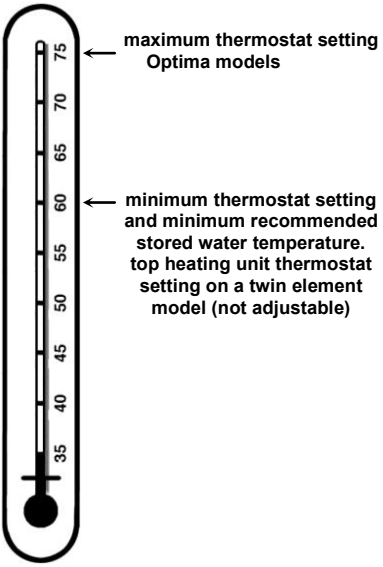

HOTTER WATER INCREASES THE RISK OF SCALD INJURY

This water heater can deliver water at temperatures which can cause scalding. Check the water temperature before use, such as when entering a shower or filling a bath or basin, to ensure it is suitable for the application and will not cause scald injury.

We recommend and it may also be required by regulations that an approved temperature limiting device be fitted into the hot water pipe work to the bathroom and ensuite when an Optima water heater is installed.

This will keep the water temperature below 55°C at the bathroom and ensuite. The risk of scald injury will be reduced and still allow hotter water to the kitchen and laundry.

THERMOSTAT

The thermostat automatically controls the electricity supply to the heating unit so a constant temperature is maintained. The thermostat and its protective over temperature cut out is mounted inside the front cover of the water heater. There is no need to switch the water heater off when it is not in use, except when you are on an extended holiday. The thermostat is fully automatic and power is only used when heating is required.

TEMPERATURE ADJUSTMENT

An Optima water heater features a user adjustable thermostat, which allows you to choose the most suitable temperature for your hot water needs. To adjust the temperature, push in the child resistant knob and turn anticlockwise to decrease or clockwise to increase the temperature setting. The Optima has a minimum temperature setting of 60°C and a maximum temperature setting of 75°C.

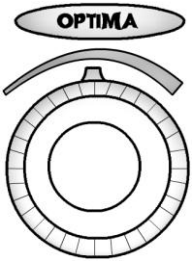

⚠ WARNING

This water heater is only intended to be operated by persons who have the experience or the knowledge and the capabilities to do so. This water heater is not intended to be operated by persons with reduced physical, sensory or mental capabilities i.e. the infirm, or by children. Children should be supervised to ensure they do not interfere with the water heater.

This water heater uses 240 V AC power for the electrically operated components. The removal of the front cover(s) will expose 240 V wiring. It must only be removed by an authorised or qualified person.

Take care not to touch the power plug on a water heater fitted with a power supply cord and plug with wet hands.

SAFETY

This water heater is supplied with a thermostat, an over-temperature cut-out, and a combination temperature pressure relief valve.
These devices must not be. tampered with or removed.
The water heater must not be operated unless each of these devices is fitted and is in working order.

The operation of the over-temperature cut-out on the thermostat indicates a possibly dangerous situation. If the over-temperature cut-out operates, it must not be reset and the water heater must be serviced by an authorised or qualified person.

⚠ **Warning:** For continued safety of this water heater it must be installed, operated and maintained in accordance with the Owner's Guide and Installation Instructions.

The warranty can become void if relief valves or other safety devices are tampered with or if the installation is not in accordance with these instructions.

SINGLE ELEMENT MODEL

This type of water heater has one heating unit with its own thermostat. The heating unit is at the base of the water heater.

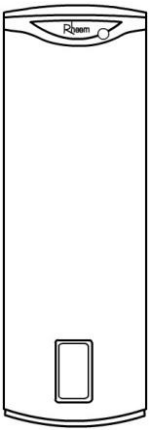

- **Continuous electricity supply**
  This type of connection is suited to where the storage capacity is less than the normal daily usage.
- **Off-Peak electricity supply**
  This type of connection will only allow heating to occur during set hours. A volume of water sufficient for the day's total use is heated and stored. This type of heating will be more economical due to reduced tariffs by the electricity authority.

TWIN ELEMENT MODEL

This type of water heater has two heating units, each with its own thermostat. One heating unit is at the base of the water heater and the other near the top.

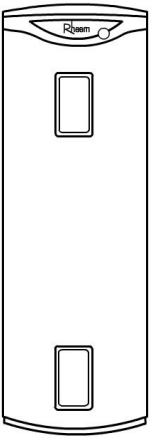

- **Bottom heating unit**
  During normal operation this heating unit supplies all the hot water.
- **Top heating unit (Booster)**
  This heating unit only operates during periods of high demand to provide an additional supply of heated water.
- **Electrical connection**
  The two heating units are wired for non-simultaneous operation, so that only one heating unit can operate at a time. The bottom heating unit is usually connected to an Off-Peak (overnight) or time controlled electricity supply and the top heating unit to a continuous supply. Some electricity suppliers allow both heating units to be metered at the Off-Peak or controlled tariff.

NOTE: Power must be available to the top heating unit circuit at all times for this water heater to operate as designed.

TO TURN OFF THE WATER HEATER

If you plan to be away from home for only a few nights, we suggest you leave the water heater switched on.

If it is necessary to turn off the water heater:

- Switch off the electrical supply at the isolating switch to the water heater.
- Unplug the power supply cord from the power outlet (power supply cord model only).
- Close the cold water isolation valve at the inlet to the water heater.

TO TURN ON THE WATER HEATER

- Open the cold water isolation valve fully on the cold water line to the water heater.
- Plug in the power supply cord at the power outlet (power supply cord model only).
- Switch on the electrical supply at the isolating switch to the water heater.

GOING ON HOLIDAY?

If you plan to be away from home for one or two nights, we suggest you leave the water heater switched on. However, if you plan to stay away more than a few nights, conserve energy by switching the water heater off at either the switchboard or isolating switch.

HOW DO I KNOW IF THE WATER HEATER IS INSTALLED CORRECTLY?

Installation requirements are shown on pages 18 to 26. The water heater must be installed by an authorised person and the installation must comply with National Standards AS/NZS 3500.4, AS/NZS 3000 and all local codes and regulatory authority requirements. The installation must conform with the New Zealand Building Code.

DOES THE WATER CHEMISTRY AFFECT THE WATER HEATER?

The water heater is suitable for most public water supplies, however some water chemistries may have detrimental effects on the cylinder and fittings. **If you are in a known harsh water area you must read page 11**. If you are not sure, have your water chemistry checked against the conditions described on page 11.

HOW LONG WILL THE WATER HEATER LAST?

There are a number of factors that will affect the length of service the water heater will provide. These include the water chemistry, the water pressure, the water temperature (inlet and outlet) and the water usage pattern. However, your water heater is supported by a comprehensive warranty (refer to page 36).

TEMPERATURE PRESSURE RELIEF VALVE

This valve is near the top of the water heater and is essential for its safe operation. It is possible for the valve to release a little water through the drain line during each heating period. This occurs as the water is heated and expands by approximately 1/50 of its volume.

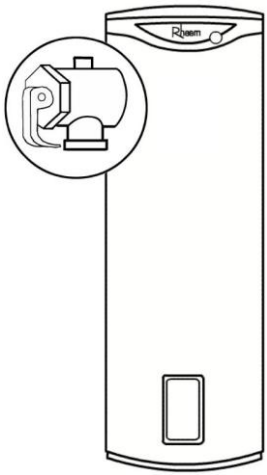

Continuous leakage of water from the valve and its drain line may indicate a problem with the water heater (refer to "Temperature Pressure Relief Valve Running" on page 16).

⚠ **Warning:** Never block the outlet of this valve or its drain line for any reason.

Operate the easing lever on the temperature pressure relief valve once every six months. **It is very important you raise and lower the lever gently.**

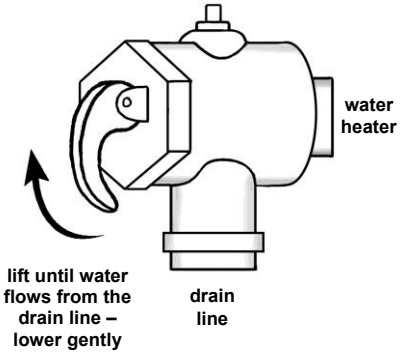

⚠ **DANGER:** Failure to do this may result in the water heater cylinder failing, or under certain circumstances, exploding.

If water does not flow freely from the drain line when the lever is lifted, then the water heater should be checked by a Rheem Service Centre.

The temperature pressure relief valve should be checked for performance or replaced at intervals not exceeding 5 years, or more frequently in areas where there is a high incidence of water deposits (refer to "Water Supplies" on page 11).

TEMPERATURE LIMITING VALVE

The valve should be checked for performance every twelve months. This can be performed by measuring the water temperature from a hot tap with a thermometer. If the water is being delivered at a temperature exceeding 55°C, phone a Rheem Service Centre.

The valve should be replaced at intervals not exceeding 5 years, or more frequently in areas where there is a high incidence of water deposits (refer to "Water Supplies" on page 11). Failure to do this may result in water at a temperature up to 70°C being delivered at the hot tap, increasing the risk of scald injury.

EXPANSION CONTROL VALVE

An expansion control valve must be fitted to the cold water line to the water heater. The expansion control valve may discharge a small quantity of water from its drain line during the heating period instead of the temperature pressure relief valve on the water heater.

Operate the easing lever on the expansion control valve once every six months. **It is very important you raise and lower the lever gently.** The expansion control valve should be checked for performance or replaced at intervals not exceeding 5 years, or more frequently in areas where there is a high incidence of water deposits.

GENERAL MAINTENANCE

The jacket of the water heater can be cleaned with a soft cloth and warm mild soapy water on a 3 monthly interval in coastal areas. Under no circumstances should abrasive materials or powders be used.

WATER SUPPLIES

This water heater must be installed in accordance with this advice to be covered by the warranty.

This water heater is manufactured to suit the water conditions of most public reticulated water supplies. However, there are some known water chemistries which can have detrimental effects on the water heater and its operation and / or life expectancy. If you are unsure of your water chemistry, you may be able to obtain information from your local water supply authority. This water heater should only be connected to a water supply which complies with these guidelines for the water heater warranty to apply.

ANODE

The vitreous enamel lined cylinder of the water heater is only covered by warranty when the total dissolved solids (TDS) content in the water is less than 2500 mg/L and when the correct colour coded anode is installed. The use of an incorrect colour coded anode will void the cylinder warranty and may shorten the life of the water heater cylinder.

The correct colour coded anode must be selected and fitted to the water heater in accordance with the following advice and the Anode Selection chart on page 11 for warranty to apply to the water heater cylinder.

Total Dissolved Solids	Anode colour code
0 – 40 mg/L	Green
40 – 150 mg/L	Green or Black
150 – 400 mg/L	Black
400 – 600 mg/L	Black or Blue
600 – 2500 mg/L	Blue
2500 mg/L +	Blue (no cylinder warranty)

The changing of anodes must be carried out by a plumber or authorised service person.

Note: Some water analysis reports may state the conductivity of the water rather than the level of total dissolved solids. Conductivity, measured in microsiemens per centimetre (μS / cm), is directly proportional to the TDS content of the water. TDS, in mg / L, is approximately 70% of the conductivity in μS / cm.

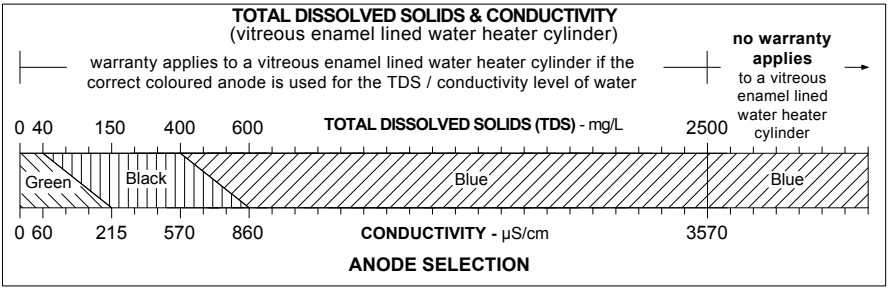

ANODE INSPECTION

The anode installed in your water heater will slowly dissipate whilst protecting the cylinder. The life of the water heater cylinder may be extended by arranging for an authorised person to inspect the anode and replace if required.

The suggested time after installation when the anode should be inspected is:

Optima 10 years

For water supplies which are either softened, desalinated or where the water supply may alternate between a water tank and a reticulated public supply or another supply, it is recommended the anode be inspected 3 years earlier than shown (refer to “Anode” on page 11).

CAUTION

If the water supply has a TDS greater than 150 mg/L and a green anode has not been changed to a black anode, or if the TDS is greater than 600 mg/L and the anode has not been changed to a blue anode, there is the possibility the anode may become overactive and hydrogen gas could accumulate in the top of the water heater during long periods of no use.

If, under these conditions, the water heater has not been used for two or more weeks the following procedure should be carried out before using any electrical appliances (automatic washing machines and dishwashers) which are connected to the hot water supply.

The hydrogen, which is highly flammable, should be vented safely by opening a hot tap and allowing the water to flow. There should be no smoking or naked flame near the tap whilst it is turned on. Any hydrogen gas will be dissipated. This is indicated by an unusual spurting of the water from the tap. Once the water runs freely, any hydrogen in the system will have been released.

SATURATION INDEX

The saturation index is used as a measure of the water's corrosive or scaling properties.

In a corrosive water supply, the water can attack copper parts and cause them to fail. Where the saturation index is less than –1.0, the water is very corrosive and warranty does not apply to a copper sheathed heating unit. A corrosion resistant heating unit must be used for warranty to apply to the heating unit.

In a scaling water supply calcium carbonate is deposited out of the water onto any hot metallic surface. Where the saturation index exceeds +0.40, the water is very scaling. An expansion control valve must be fitted on the cold water line after the non-return valve to protect and for warranty to apply to the temperature pressure relief valve and water heater cylinder.

Where the saturation index exceeds +0.80, warranty does not apply to a standard watts density heating unit. A low watts density heating unit must be used for warranty to apply to the heating unit.

Water which is scaling may be treated with a water softening device to reduce the saturation index of the water.

Refer to the Saturation Index chart on page 13. Refer to the cold water connection detail on page 27 for the position of the expansion control valve.

Contact Rheem Service Centre if a replacement heating unit is required.

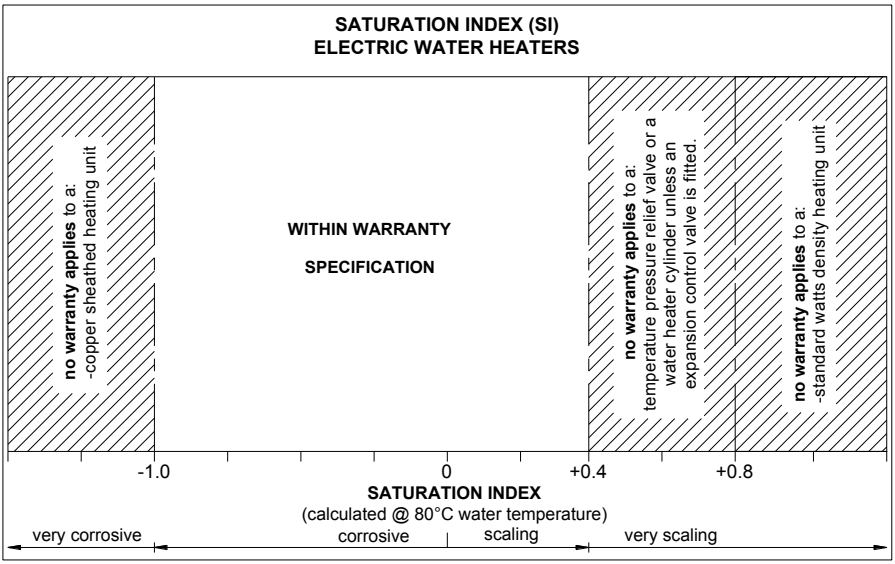

CHANGE OF WATER SUPPLY

The changing or alternating from one water supply to another can have a detrimental effect on the operation and / or life expectation of a water heater cylinder, a temperature pressure relief valve and a heating unit.

Where there is a changeover from one water supply to another, e.g. a rainwater tank supply, bore water supply, desalinated water supply, public reticulated water supply or water brought in from another supply, then water chemistry information should be sought from the supplier or it should be tested to ensure the water supply meets the requirements given in these guidelines for warranty to apply.

SUMMARY OF WATER CHEMISTRY ADVICE AFFECTING WARRANTY

The warranty of this water heater does not apply on the components listed below if the water heater is connected at any time to a water supply with water chemistry of:

Water Chemistry	Component
Total Dissolved Solids (TDS) > 2500 mg/L	water heater cylinder
Total Dissolved Solids (TDS) not suitable for anode type	water heater cylinder
Saturation Index (SI) < -1.0	copper sheathed heating unit
Saturation Index (SI) > +0.4 (if expansion control valve is not fitted)	water heater cylinder temperature pressure relief valve
Saturation Index (SI) > +0.8	standard watts density heating unit

SAVE A SERVICE CALL

Check the items below before making a service call. You will be charged for attending to any condition or fault that is not related to the manufacture or failure of a part.

NOT ENOUGH HOT WATER (OR NO HOT WATER)

- **Is the electricity switched on?**
  Inspect the isolating switch marked “HOT WATER” or “WATER HEATER” at the switchboard and the isolating switch (if one is installed) near the water heater and ensure they are turned on.

  Note: Check the electricity supply to which the water heater is connected. If on an Off-Peak or time controlled electricity supply, remember heating hours are restricted (refer to “Off-Peak Electricity Supply” on page 7).

  Check the fuse marked “HOT WATER” or “WATER HEATER” at the switchboard.

- **Twin element water heaters**
  A twin element non-simultaneous model must have power available to the top heating unit circuit at all times for the water heater to operate as designed.

- **Are you using more hot water than you think?**
  Is one outlet (especially the shower) using more hot water than you think? Very often it is not realised the amount of hot water used, particularly when showering. Carefully review the family’s hot water usage. Have your plumber fit a flow control valve to each shower outlet to reduce water usage.

- **Temperature pressure relief valve running**
  Is the relief valve discharging too much water? (Refer to “Temperature Pressure Relief Valve Running” on page 16).

- **Thermostat setting**
  Ensure the thermostat setting is appropriate. You may choose to adjust the thermostat upwards to gain additional hot water capacity.
  Refer to “temperature Adjustment” on page 5

⚠ **Warning:** Hotter water increases the risk of scald injury.

- **Water heater size**
  Do you have the correct size water heater for your requirements? The sizing guide in the Rheem sales literature and on the Rheem website (www.rheem.co.nz) suggests average sizes that may be needed.

TEMPERATURE PRESSURE RELIEF VALVE RUNNING

- **Normal Operation**
  It is normal and desirable that this valve allows a small quantity of water to escape during the heating cycle. However, if it discharges more than a bucket full of water in 24 hours, there may be another problem.

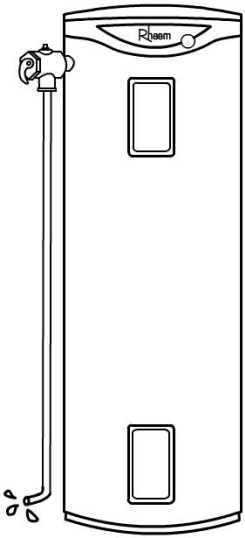

- **Continuous dribble**
  Try gently raising the easing lever on the relief valve for a few seconds (refer to "Temperature Pressure Relief Valve" on page 9). This may dislodge a small particle of foreign matter and clear the fault. Release the lever gently.

- **Steady flows for long period (often at night)**
  This may indicate the mains water pressure sometimes rises above the designed pressure of the water heater. Ask your installing plumber to fit a pressure limiting valve.

- **Heavy flows of hot water until water heater is cold - then stops until water reheats**
  The water heater **must** be switched off at the switchboard. Phone a Rheem Service Centre

⚠ **Warning:** Never replace the relief valve with one of a higher pressure rating.

EXPANSION CONTROL VALVE RUNNING

If an expansion control valve is fitted in the cold water line to the water heater (refer to page 27) it may discharge a small quantity of water instead of the temperature pressure relief valve on the water heater. The benefit is that energy is conserved as the discharged water is cooler.

HIGHER THAN EXPECTED ELECTRICITY BILLS

Should you at any time, feel your electricity account is higher than expected, we suggest you check the following points:

- Is the relief valve running excessively?

  Refer to "Temperature Pressure Relief Valve Running" on page 16.

- Is one outlet (especially the shower) using more hot water than you think?

  Refer to "Not Enough Hot Water" on page 15.

- Is there a leaking hot water pipe, dripping hot water tap, etc?

  Even a small leak will waste a surprising quantity of hot water and electricity. Replace faulty tap washers, and have your plumber rectify any leaking pipe work.

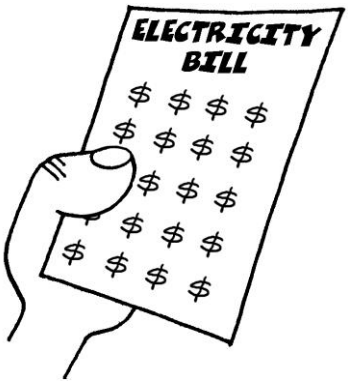

- Has there been an increase in hot water usage?

  An increase in hot water usage will result in an increase in water heater operation.

- Has your water heating tariff rate been increased by your electricity retailer since your previous account?

ELECTRICITY TARIFFS

The electricity tariff to which your water heater is connected will determine the overall operating cost of the system. It is important you are aware of this tariff, i.e. Off-Peak (overnight) or time controlled supply, Extended Off-Peak (overnight and day) or Extended time controlled supply, Domestic / Continuous. For types of tariffs, refer to "Single Element Model" on page 7 and "Twin Element Model" on page 7.

IF YOU HAVE CHECKED ALL THE FOREGOING AND STILL BELIEVE YOU NEED ASSISTANCE, PHONE A RHEEM SERVICE CENTRE.

INSTALLATION

THIS WATER HEATER IS NOT SUITABLE FOR POOL HEATING

The installation must comply with the requirements of AS/NZS 3500.4, AS/NZS 3000 and all local codes and regulatory authority requirements. In New Zealand, the installation must conform with the New Zealand Building Code.

All packaging materials must be removed from the water heater prior to its installation. This includes the removal of the cardboard base of the carton from the underside of the water heater.

WATER HEATER LOCATION

This water heater is suitable for either outdoor or indoor installation (a model with a supply cord and plug is suitable for indoor installation only). Whether located outdoor or indoor, the water heater should be installed close to the most frequently used outlet and its position chosen with safety and service in mind.

Clearance must be allowed for servicing of the water heater. The water heater must be accessible without the use of a ladder or scaffold.

Make sure the temperature pressure relief valve lever is accessible and the front cover, thermostat, heating unit and if fitted, the side cover and temperature limiting valve can be removed for service.

You must be able to read the information on the rating plate. If possible leave headroom of one water heater height so the anode can be inspected or replaced. Remember you may have to take the entire water heater out later for servicing.

It is recommended the water heater be installed at ground or floor level and must stand vertically upright. The base of the water heater is made of corrosion resistant material, and it may be placed directly in contact with the supporting surface. It is not necessary to allow for free air circulation under the base of the water heater.

Note: The water heater should not be placed in direct contact with a concrete surface that is less than two months old and not fully cured as this may attack the metal coating of the water heater base. A moisture barrier should be used between the two surfaces in this instance.

Remember all local authorities have regulations about putting water heaters into roof spaces.

SAFE TRAY

It is a requirement of AS/NZS 3500.4 that for a new installation, a water heater be installed in a safe tray where in the event of a leak, property may otherwise be damaged. Construction, installation and draining of a safe tray must comply with the abovementioned Standard.

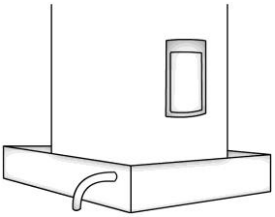

MAINS WATER SUPPLY

Where the mains water supply pressure exceeds that shown in the table below, an approved pressure limiting valve is required and should be fitted as shown in the installation diagram (refer to diagram on page 27).

Model	025 to 160	250 to 400
Relief valve setting	1400 kPa	1000 kPa
Expansion control valve setting*	1200 kPa	850 kPa
Max. mains supply pressure		
With expansion control valve	950 kPa	650 kPa
Without expansion control valve	1120 kPa	800 kPa

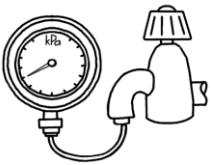

* Expansion control valve not supplied with water heater

TANK WATER SUPPLY

If the water heater is supplied with water from a tank supply and a pressure pump system is not installed, then the bottom of the supply tank must be at least 1 m above the highest point of the hot water plumbing system, including the water heater. Care must be taken to avoid air locks. The cold water line to the water heater should be adequately sized and fitted with a full flow gate valve or ball valve.

Feet for Rheem Externally Mounted Cylinders

Optima 180, 300 and 400L Mains Pressure Water Heaters (3 pieces)

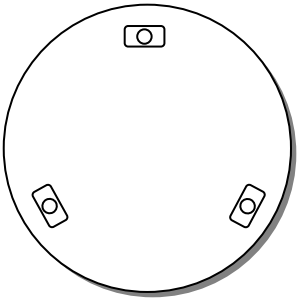

Outside diameters
180 model – 488mm
300 model – 580mm
400 model – 690mm

Feet are 50mm in from edge of cylinder

Installation options:

1. Push tags into soft concrete at correct points according to cylinder diameter
2. Cut off tags and use a blob of construction adhesive to hold feet in place at correct points according to cylinder diameter
3. Cut off tags and screw feet into place on wooden platform at correct points according to cylinder diameter

Note: It is important that only three feet are used to avoid “rocking” and that the feet are positioned at 50mm from outside edge of cylinder to outside edge of feet.

HOT WATER DELIVERY

This water heater can deliver water at temperatures which can cause scalding.

It is necessary and we recommend that a temperature limiting device be fitted between a Rheemglas or Optima water heater and the hot water outlets in any ablution area such as a bathroom or ensuite, to reduce the risk of scalding. The installing plumber may have a legal obligation to ensure the installation of this water heater meets the delivery water temperature requirements of AS/NZS 3500.4 so that scalding water temperatures are not delivered to a bathroom, ensuite or other ablution area.

Where a temperature limiting device is installed adjacent to the water heater, the cold water line to the temperature limiting device can be branched off the cold water line either before or after the isolation valve, pressure limiting valve and non return valve to the water heater. If an expansion control valve is required, it must always be installed after the non return valve and be the last valve prior to the water heater.

If a pressure limiting valve is installed on the cold water line to the water heater and the cold water line to a temperature limiting device branches off before this valve or from another cold water line in the premises, then a pressure limiting valve of an equal pressure setting may be required prior to the temperature limiting device.

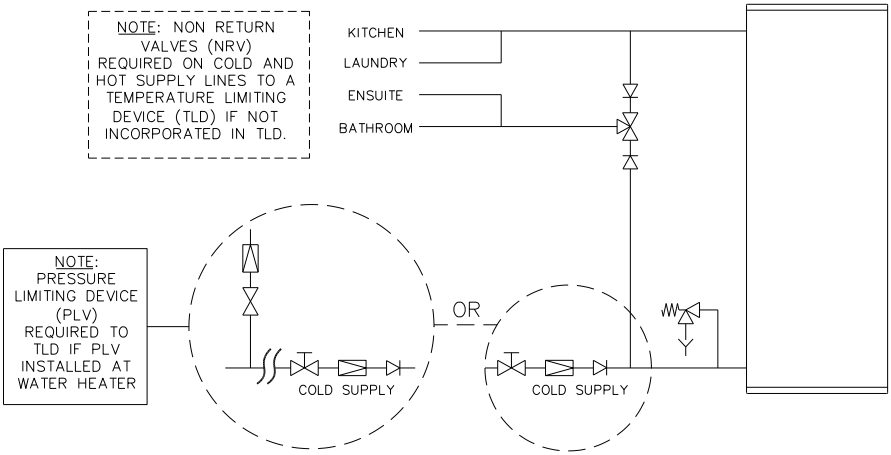

Two Temperature Zones Using a Temperature Limiting Device

CIRCULATED HOT WATER FLOW AND RETURN SYSTEM

If a Rheem water heater is to be installed as part of a circulated hot water flow and return system, a storage water heater able to provide a hot water outlet temperature of at least 60°C must be used. **Note:** The thermostat must always be above 60°C. Refer to the diagram on page 23

Temperature Limiting Device

A temperature limiting device cannot be installed in circulated hot water flow and return pipe work. The tempered water from a temperature limiting device cannot be circulated. Where a circulated hot water flow and return system is required in a building, a temperature limiting device can only be installed on a dead leg, branching off the circulated hot water flow and return pipe.

If circulated tempered water were to be returned back to the water heater, depending on the location of the return line connection on the water supply line to the water heater, then either: .

- water will be supplied to the cold water inlet of the temperature limiting device at a temperature exceeding the maximum recommended water supply temperature, or

- when the hot taps are closed no water will be supplied to the cold water inlet of the temperature limiting device whilst hot water will continue to be supplied to the hot water inlet of the temperature limiting device.

These conditions may result in either water at a temperature exceeding the requirements of AS/NZS 3500.4 being delivered to the hot water outlets in the ablution areas, or the device closing completely and not delivering water at all, or the device failing. Under either condition, the operation and performance of the device cannot be guaranteed.

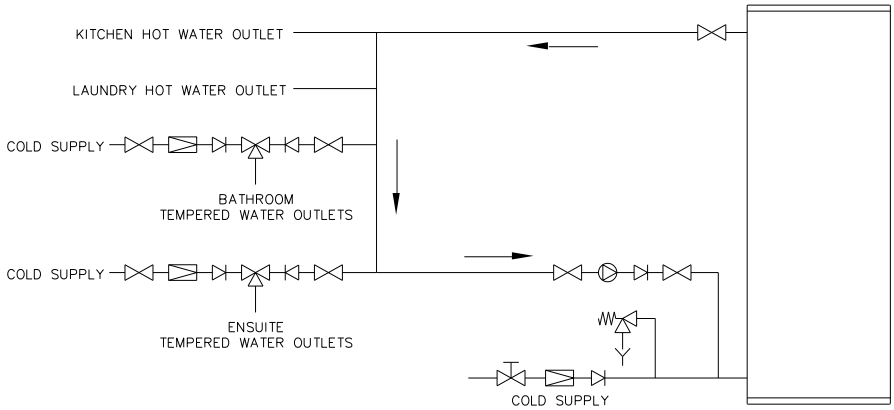

Circulated Hot Water Flow and Return
Continuous Electric Water Heater

Off-Peak or Time Controlled Electricity Supply

A single or twin element electric water heater connected to an Off-Peak electricity supply should not be installed as part of a circulated hot water flow and return system in a building. The benefits of the Off-Peak electricity supply will be significantly reduced.

REDUCING HEAT LOSSES

The cold water line to and the hot water line from the water heater must be insulated in accordance with the requirements of AS/NZS 3500.4. The insulation must be weatherproof and UV resistant if exposed. When using a hot water recirculation system, an increase in running costs can be expected due to the heat loss that occurs through the pipework.

The cold water line to and the hot water line from the water heater must be insulated in accordance with the requirements of AS/NZS 3500.4. The insulation must be weatherproof and UV resistant if exposed.

ANODE

The vitreous enamel lined cylinder of the water heater is only covered by warranty when the total dissolved solids (TDS) content in the water is less than 2500 mg/L and when the correct colour coded anode is installed. The use of an incorrect colour coded anode will void the cylinder warranty and may shorten the life of the water heater cylinder.

The correct colour coded anode for the water supply being used must be selected and fitted to the water heater for warranty to apply to the water heater cylinder (refer to "Water Supplies" on page 11 and the Anode Selection chart on page 12). The black anode is typically fitted as standard.

Total Dissolved Solids	Anode colour code
0 – 40 mg/L	Green
40 – 150 mg/L	Green or Black
150 – 400 mg/L	Black
400 – 600 mg/L	Black or Blue
600 – 2500 mg/L	Blue
2500 mg/L +	Blue (no cylinder warranty)

If the water supply has a TDS greater than 150 mg/L and a green anode has not been changed to a black anode, or if the TDS is greater than 600 mg/L and the anode has not been changed to a blue anode, there is the possibility the anode may become overactive and hydrogen gas could accumulate in the top of the water heater during long periods of no use. In areas where this is likely to occur, the installer should instruct the householder on how to dissipate the gas safely (refer to "Caution" on page 12).

DIMENSIONS AND TECHNICAL DATA

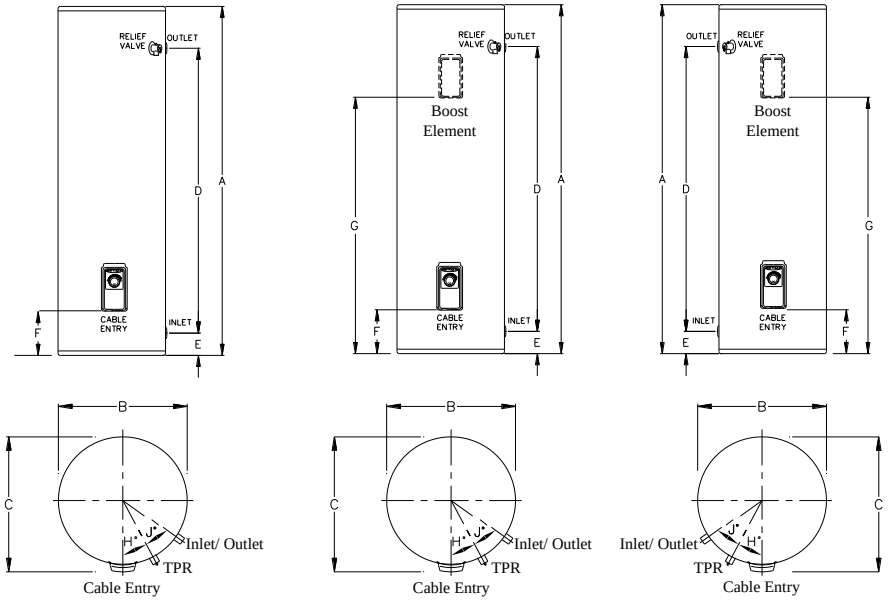

Optima 180 Litre **Optima 300 Litre** **Optima 400 Litre**

Optima Single Element Optima Twin Element			913 180 -	- 913 300	- 913 400
Hot Water Delivery		Litres	180	300	400
Boost Capacity		Litres	-	50	90
Dimensions	A	mm	1720	1825	1840
	B	mm	488	580	690
	C	mm	554	646	755
	D	mm	1482	1569	1479
	E	mm	74	74	121
	F	mm	90	90	120
	G	mm	-	1295	1346
	H	deg	23	18	53
	J	deg	22	18	30
Approx. Weight empty		kg	64	97	118

400 Litre models have left hand connections.
Technical data is subject to change.

TYPICAL INSTALLATION – OUTDOOR LOCATION

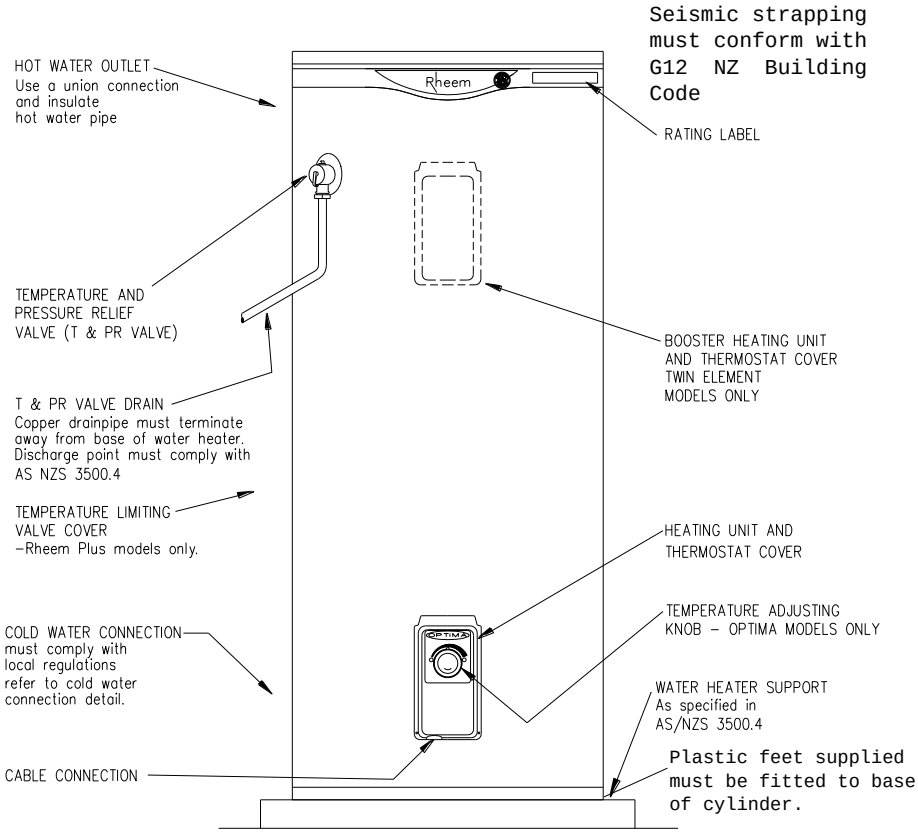

OUTDOOR LOCATIONS

TYPICAL INSTALLATION – INDOOR LOCATION

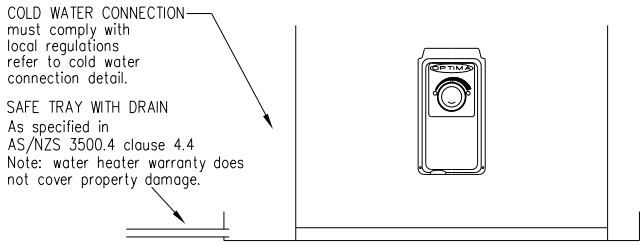

INDOOR LOCATIONS

CONNECTIONS – PLUMBING

CONNECTION SIZES

	Optima
• Hot water connection:	RP ¾/20
• Cold water connection:	RP ¾/20
• Relief valve connection:	RP ½/15

All plumbing work must be carried out by a qualified person and in accordance with the Plumbing Standard AS/NZS 3500.4 and local authority requirements.

WATER INLET AND OUTLET

All pipe work must be cleared of foreign matter before connection and purged before attempting to operate the water heater. All olive compression fittings must use brass or copper olives. Use thread sealing tape or approved thread sealant on all fittings.

An isolation valve and non-return valve must be installed on the cold water line to the water heater. An acceptable arrangement is shown in the diagram. Refer also to "Hot Water Delivery" on page 21 and to "Mains Water Supply" on page 19.

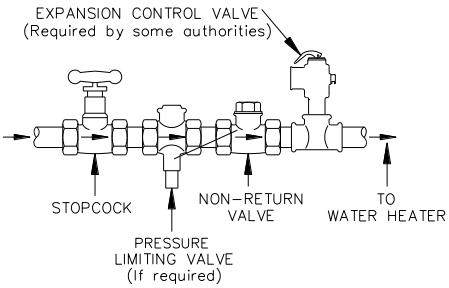

A disconnection union must always be provided at the cold water inlet and hot water outlet on the water heater to allow for disconnection of the water heater.

This water heater has either a plastic dip tube or fitting liner in the inlet and outlet fittings (see diagram). These must be in place for the water heater to function properly. Do not remove or damage them by using heat nearby. They will be pushed into the correct position as the fitting is screwed in.

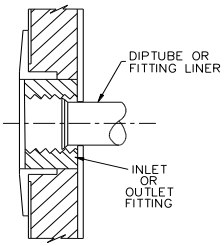

PIPE SIZES

To achieve true mains pressure operation, the cold water line to the water heater should be the same size or bigger than the hot water line from the water heater.

The pipe sizing for hot water supply systems should be carried out by persons competent to do so, choosing the most suitable pipe size for each individual application. Reference to the technical specifications of the water heater and local regulatory authority requirements must be made.

TEMPERATURE PRESSURE RELIEF VALVE

The temperature pressure relief valve is shipped either under the top flap of the water heater carton or behind the front cover or in a plastic bag attached to the water heater. The temperature pressure relief valve must be fitted before the water heater is operated. Before fitting the relief valve, make sure the probe has not been bent. Seal the thread with Teflon tape - never hemp. Make sure the tape does not hang over the end of the thread.

Screw the valve into the correct opening (refer to the installation diagram on page 25) leaving the valve outlet pointing downwards. Do not use a wrench on the valve body - use the spanner flats provided. A copper drain line must be fitted to the temperature pressure relief valve (refer to "Relief Valve Drain" on page 27).

EXPANSION CONTROL VALVE

Local regulations may make it mandatory to install an expansion control valve (ECV) in the cold water line to the water heater. In other areas, an ECV is required if the saturation index is greater than +0.4 (refer to “Water Supplies” on page 11).

The expansion control valve must always be installed after the non return valve and be the last valve installed prior to the water heater (refer to diagram on page 27). A copper drain line must be fitted to the expansion control valve (refer to "Relief Valve Drain" on page 27).

The valve must be insulated with closed cell polymer insulation or similar (minimum thickness 9 mm) and the insulation installed so as not to impede the operation of the valve. The insulation must be weatherproof and UV resistant if exposed.

RELIEF VALVE DRAIN

DN15 copper drain lines must be fitted to the temperature pressure relief valve and expansion control valve (if one is installed) to carry the discharge clear of the water heater. Connect the drain lines to the valves using disconnection unions. The drain line from the valve to the point of discharge should be as short as possible, have a continuous fall all the way from the water heater to the discharge outlet and have no tap, valves or other restrictions in the pipe work. A drain line from a relief valve must comply with the requirements of AS/NZS 3500.4. or G12 NZ Building Code

A drain line must be comply with AS/NZS 3500 or G12 NZ Building code.

Subject to local regulatory authority approval, the drain lines from the temperature pressure relief valve and expansion control valve from an individual water heater may be interconnected. Refer to local regulations.

The outlet of a drain line must be in such a position that flow out of the pipe can be easily seen, but arranged so discharge will not cause injury, damage or nuisance. The termination point of a drain line must comply with the requirements of AS/NZS 3500.4. Drain lines must not discharge into a safe tray.

In locations where water pipes are prone to freezing, drain lines must be insulated, must not exceed 300 mm in length and are to discharge into a tundish through an air gap of between 75 mm and 150 mm.

If a drain line discharges into a tundish, the drain line from the tundish must be not less than DN20. The drain line from a tundish must meet the same requirements as for a drain line from a relief valve.

Warning: As the function of the temperature pressure relief valve on this water heater is to discharge high temperature water under certain conditions, it is strongly recommended the pipe work downstream of the relief valve be capable of carrying water exceeding 93°C. Failure to observe this precaution may result in damage to pipe work and property.

CONNECTIONS – ELECTRICAL

The power supply to the water heater must not be switched on until the water heater is filled with water and a satisfactory megger reading is obtained.

All electrical work and permanent wiring must be carried out by a qualified person and in accordance with the Wiring Rules AS/NZS 3000 and local authority requirements.

WATER HEATER

A water heater not fitted with a supply cord and plug must be directly connected to a 240 V AC, 50 Hz mains power supply with an isolating switch installed at the switchboard.

The power supply to a twin element model should be Off-Peak (overnight) to the bottom heating unit and continuous to the top heating unit. The power supply to a single element model can be either an Off-Peak (overnight), Extended Off-Peak (overnight and day) or continuous electricity supply. Check with the local electricity supply authority as to their requirements.
An Off-Peak (overnight) power supply will provide the maximum financial savings. Discuss the power supply requirements with the householder.

A flexible 20 mm conduit is required for the electrical cable to the water heater. The conduit is to be connected to the unit with a 20 mm terminator. Connect the power supply wires directly to the terminal block and earth tab connection, ensuring there are no excess wire loops inside the front cover. The temperature rating of the power supply wires insulation must suit this application.

THERMOSTAT SETTING

The thermostat on an Optima model is user adjustable from 60°C to 75°C.

The thermostat is adjusted by turning the knob anticlockwise to decrease the temperature setting and clockwise to increase the temperature setting. The top thermostat on a twin element model is fixed at 60°C.

For reasons of safety and economy, we advise the thermostat be set at the lowest temperature that will provide sufficient hot water. Dishwasher running costs can be adversely affected if the thermostat is set below 65°C. Discuss the thermostat setting requirements with the householder.

ASSEMBLY OF ADJUSTER MECHANISM ON OPTIMA MODEL

When the front cover has been removed, reassemble as follows:

- Remove the knob from the front cover by depressing the locking tabs on the inside of the front cover.
- Turn the thermostat to the lowest temperature (refer to “Temperature Adjustment” on page 5).
- Fit the front cover.
- Insert the connector shaft through the hole into the thermostat adaptor slots.

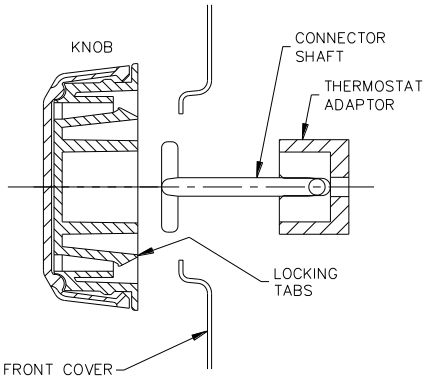

- Align the knob slots over the ' T ' drive on the connector shaft, with the dial at the lowest setting – a firm push with the hand on the knob front face will engage the locking tabs.

WIRING DIAGRAM TWIN ELEMENT ELECTRIC WATER HEATERS
NON-SIMULTANEOUS OPERATION OFF-PEAK CONNECTION

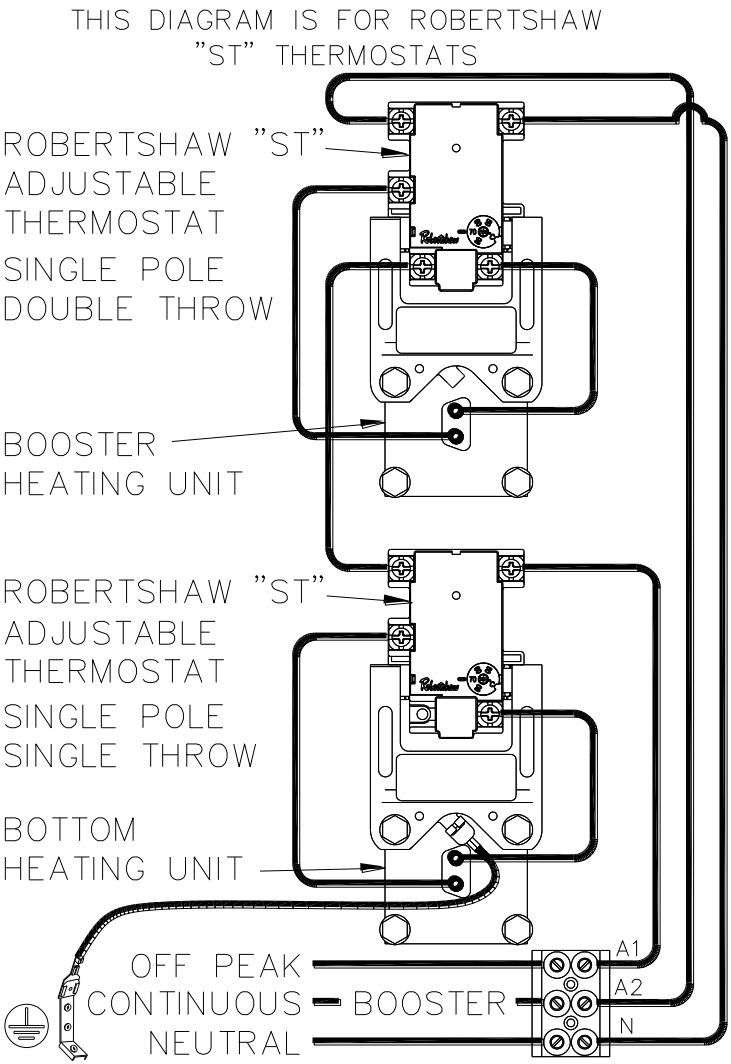

Electrical Circuit for Twin Element Models – Robertshaw "ST" Thermostats

The active from the continuous supply must be connected to the top heating unit circuit and the active from the Off-Peak or time controlled supply must be connected to the bottom heating unit circuit.

COMMISSIONING

TO FILL AND TURN ON THE WATER HEATER

The power supply to the water heater must not be switched on until the water heater is filled with water and a satisfactory megger reading is obtained.

- Open all of the hot water taps in the house (don't forget the shower).
- Open the cold water isolation valve fully on the cold water line to the water heater.

  Air will be forced out of the taps.
- Close each tap as water flows freely from it.
- Check the pipe work for leaks.
- Switch on the electrical supply at the isolating switch to the water heater.

Explain to the householder or a responsible officer the functions and operation of the water heater. Upon completion of the installation and commissioning of the water heater, leave this guide with the householder or a responsible officer.

TO TURN OFF THE WATER HEATER

If it is necessary to turn off the water heater on completion of the installation, such as on a building site or where the premises is vacant, then;

- Switch off the electrical supply at the isolating switch to the water heater.
- Close the cold water isolation valve at the inlet to the water heater.

DRAINING THE WATER HEATER

To drain the water heater:

- Turn off the water heater (refer to “To Turn Off The Water Heater” on page 33).
- Close all hot water taps.
- Operate the relief valve release lever - do not let the lever snap back or you will damage the valve seat.

  Operating the lever will release the pressure in the water heater.
- Undo the union at the cold water inlet to the water heater and attach a hose to the water heater side of the union.

  Let the other end of the hose go to a drain.
- Operate the relief valve again.

  This will let air into the water heater and allow the water to drain through the hose.

RHEEM ELECTRIC DOMESTIC MAINS PRESSURE WATER HEATER WARRANTY

WARRANTY CONDITIONS

1. This warranty is applicable only to water heaters manufactured from 1st Oct 2010.
2. The water heater must be installed in accordance with the water heater installation instructions, supplied with the water heater, and in accordance with all relevant statutory and local requirements of the State in which the water heater is installed.
3. Where a failed component or water heater is replaced under warranty, the balance of the original warranty period will remain effective. The replaced component or water heater does not carry a new warranty.
4. Where the water heater is installed outside the boundaries of a metropolitan area as defined by Rheem or further than 25 km from a regional Rheem branch office, or a Rheem Service Centre the cost of transport, insurance and traveling costs between the nearest Rheem Service Centre's premises and the installed site shall be the owner's responsibility.
5. Where the water heater is installed in a position that does not allow safe, ready access, the cost of accessing the site safely, including the cost of additional materials handling and / or safety equipment, shall be the owner's responsibility.
6. The warranty only applies to the water heater and original or genuine (company) component replacement parts and therefore does not cover any plumbing or electrical parts supplied by the installer and not an integral part of the water heater, e.g. pressure limiting valve; isolation valves; non-return valves; electrical switches; pumps or fuse.
7. The water heater must be sized to supply the hot water demand in accordance with the guidelines in the water heater literature.

WARRANTY EXCLUSIONS

1. REPAIR AND REPLACEMENT WORK WILL BE CARRIED OUT AS SET OUT IN THE WATER HEATER WARRANTY, HOWEVER THE FOLLOWING EXCLUSIONS MAY CAUSE THE WATER HEATER WARRANTY TO BECOME VOID AND MAY INCUR A SERVICE CHARGE AND / OR COST OF PARTS.

a) Accidental damage to the water heater or any component, including: Acts of God; failure due to misuse; incorrect installation; attempts to repair the water heater other than by a Rheem Service Centre or the Rheem Service Department.
b) Where it is found there is nothing wrong with the water heater; where the complaint is related to excessive discharge from the temperature and / or pressure relief valve due to high water pressure; where there is no flow of hot water due to faulty plumbing; where water leaks are related to plumbing and not the water heater or water heater components; where there is a failure of electricity or water supplies; where the supply of electricity or water does not comply with relevant codes or acts.
c) Where the water heater or water heater component has failed directly or indirectly as a result of: excessive water pressure; excessive temperature and / or thermal input; blocked overflow / vent drain; corrosive atmosphere; ice formation in the pipe work to or from the water heater.
d) Where the water heater is located in a position that does not comply with the water heater installation instructions or relevant statutory requirements, causing the need for major dismantling or removal of cupboards, doors or walls, or use of special equipment to bring the water heater to floor or ground level or to a serviceable position.
e) Where the water heater has been connected at any time to a water supply that does not comply with the water supply guidelines as outlined in the Owner's Guide and Installation Instructions.

2. SUBJECT TO ANY STATUTORY PROVISIONS TO THE CONTRARY, THIS WARRANTY EXCLUDES ANY AND ALL CLAIMS FOR DAMAGE TO FURNITURE, CARPETS, WALLS, FOUNDATIONS OR ANY OTHER CONSEQUENTIAL LOSS EITHER DIRECTLY OR INDIRECTLY DUE TO LEAKAGE FROM THE WATER HEATER, OR DUE TO LEAKAGE FROM FITTINGS AND / OR PIPE WORK OF METAL, PLASTIC OR OTHER MATERIALS CAUSED BY WATER TEMPERATURE, WORKMANSHIP OR OTHER MODES OF FAILURE.

RHEEM ELECTRIC DOMESTIC MAINS PRESSURE WATER HEATER WARRANTY

WARRANTY

In addition to your legal rights, Rheem New Zealand makes the following promise to the customer. We will repair, or if necessary, replace a defective domestic water heater, or part, which has failed due to faulty manufacture on the following terms and conditions.

Component	Installation	Model	Warranty Period	Warranty
All components (from date of installation)	All installations	Optima	Up to 3 Years	New component or water heater, free of charge, including labour.
Inner Cylinder (from date of installation)	Water heater installed in a "single-family domestic dwelling" With a thermostat set below 76˚C	Optima	First 5 years	New water heater, free of charge, including labour.
			Years 6-10	New water heater, free of charge, with installation and labour costs being the responsibility of the owner.
	Water heater installed in other than a "single-family domestic dwelling" With a thermostat set below 76˚C	Optima	First 12 months	New component or water heater, free of charge, including labour.
			Years 2-5	New water heater, free of charge, with installation and labour costs being the responsibility of the owner.

DURABILITY

Your Rheem water heater meets the durability standards of the New Zealand Building Code provided the water heater is:

1. Installed in accordance with the New Zealand Building Code and the Rheem installation instructions
2. Maintained in accordance with these instructions
3. Not damaged in any way
4. Stored correctly prior to use,
5. Your water quality remains within the requirements stated in the installation instructions

Warranty Conditions: see Page 35

Note: The water heater must be installed and maintained in accordance with the Rheem Installation Guides supplied with the water heater, and comply fully with all the requirements of the New Zealand Building Code.

First Alert USER'S MANUAL

WIRELESS INTERCONNECT AC POWERED SMOKE ALARM WITH BATTERY BACK-UP

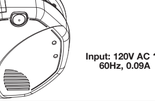

Input: 120V AC ~, 60Hz, 0.09A

IMPORTANT!
PLEASE READ CAREFULLY AND SAVE.
This user's manual contains important information about your Smoke Alarm's operation. If you are installing this Smoke Alarm for use by others, you must leave this manual—or a copy of it—with the end user.

Printed in Mexico
M08-0149-008 Q
05/15

CONFORMS TO UL STD 217 Model SA520

© 2015 BRK Brands, Inc. All rights reserved.
Distributed by BRK Brands, Inc.
3901 Liberty Street Road, Aurora, IL 60504-8122
Consumer Affairs: (800) 323-9005 • www.firstalert.com

All First Alert® and BRK® Smoke Alarms conform to regulatory requirements, including UL217 and are designed to detect particles of combustion. Smoke particles of varying number and size are produced in all fires.

Ionization technology is generally more sensitive than photoelectric technology at detecting small particles, which tend to be produced in greater amounts by flaming fires, which consume combustible materials rapidly and spread quickly. Sources of these fires may include paper burning in a wastebasket, or a grease fire in the kitchen.

Photoelectric technology is generally more sensitive than ionization technology at detecting large particles, which tend to be produced in greater amounts by smoldering fires, which may smolder for hours before bursting into flame. Sources of these fires may include cigarettes burning in couches or bedding.

For maximum protection, use both types of Smoke Alarms on each level and in every bedroom of your home.

FIRE SAFETY TIPS

Follow safety rules and prevent hazardous situations: 1) Use smoking materials properly. Never smoke in bed. 2) Keep matches or lighters away from children; 3) Store flammable materials in proper containers; 4) Keep electrical appliances in good condition and don't overload electrical circuits; 5) Keep stoves, barbecue grills, fireplaces and chimneys grease- and debris-free; 6) Never leave anything cooking on the stove unattended; 7) Keep portable heaters and open flames, like candles, away from flammable materials; 8) Don't let rubbish accumulate.

Keep alarms clean, and test them weekly. Replace alarms immediately if they are not working properly. Smoke Alarms that do not work cannot alert you to a fire. Keep at least one working fire extinguisher on every floor, and an additional one in the kitchen. Have fire escape ladders or other reliable means of escape from an upper floor in case stairs are blocked.

BEFORE YOU INSTALL THIS SMOKE ALARM

IMPORTANT! Read "Recommended Locations for Smoke Alarms" and "Locations to Avoid for Smoke Alarms" before beginning. This unit monitors the air, and when smoke reaches its sensing chamber, it alarms. It can give you more time to escape before fire spreads. This unit can ONLY give an early warning of developing fires if it is installed, maintained and located where smoke can reach it, and where all residents can hear it, as described in this manual. This unit will not sense gas, heat, or flame. It cannot prevent or extinguish fires.

Understand The Different Type of Smoke Alarms

Battery powered or electrical? Different Smoke Alarms provide different types of protection. See "About Smoke Alarms" for details.

Know Where To Install Your Smoke Alarms

Fire Safety Professionals recommend at least one Smoke Alarm on every level of your home, including every bedroom and in every bedroom hallway or separate sleeping area. See "Recommended Locations For Smoke Alarms" and "Locations To Avoid For Smoke Alarms" for details.

Know What Smoke Alarms Can and Can't Do

A Smoke Alarm can help alert you to fire, giving you precious time to escape. It can only sound an alarm once smoke reaches the sensor. See "Limitations of Smoke Alarms" for details.

Check Your Local Building Codes

This Smoke Alarm is designed to be used in a typical single-family home. It alone will not meet requirements for boarding houses, apartment buildings, hotels or motels. See "Special Compliance Considerations" for details.

⚠DANGER!

ELECTRICAL SHOCK HAZARD. Turn off the power to the area where the Smoke Alarm is installed before removing it from the mounting bracket. Failure to turn off the power first may result in serious electrical shock, injury or death.

⚠WARNING!

- **This unit will not alert hearing impaired residents. It is recommended that you install special units which use devices like flashing strobe lights to alert hearing impaired residents.**
- **Installation of this unit must conform to the electrical codes in your area; Articles 210 and 300.3 (B) of NFPA 70 (NEC), NFPA 72, NFPA 101; SBC (SBCCI); UBC (ICBO); NBC (BOCA); OTFDC (CABO), and any other local or building codes that may apply. Wiring and installation must be performed by a licensed electrician. Failure to follow these guidelines may result in injury or property damage.**
- **This unit must be powered by a 24-hour, 120VAC pure sine wave 60Hz circuit. Be sure the circuit cannot be turned off by a switch, dimmer, or ground fault circuit interrupter. Failure to connect this unit to a 24-hour circuit may prevent it from providing constant protection.**
- **This Smoke Alarm must have AC or battery power to operate. If the AC power fails, battery back-up will allow the alarm to sound for at least 4 minutes. If AC power fails and the battery is weak, protection should last for at least 7 days. If AC power fails and the battery is dead or missing, the alarm cannot operate.**
- **Never disconnect the power from an AC powered unit to stop an unwanted alarm. Doing so will disable the unit and remove your protection. In the case of a true unwanted alarm open a window or fan the smoke away from the unit. The alarm will reset automatically when it returns to normal operation. Never remove the batteries from a battery operated unit to stop an unwanted alarm (caused by cooking smoke, etc.). Instead open a window or fan the smoke away from the unit. The alarm will reset automatically.**

⚠CAUTION!

- **Connect this unit ONLY to other compatible units. See "How To Install This Smoke Alarm" for details. Do not connect it to any other type of alarm or auxiliary device. Connecting anything else to this unit may damage it or prevent it from operating properly.**
- **This Smoke Alarm has a battery drawer which resists closing unless a battery is installed. This warns you the unit will not operate under DC power without a battery.**
- **Do not stand too close to the unit when the alarm is sounding. It is loud to wake you in an emergency. Exposure to the horn at close range may harm your hearing.**
- **Do not paint over the unit. Paint may clog the openings to the sensing chambers and prevent the unit from operating properly.**

HOW TO INSTALL THIS SMOKE ALARM

This Smoke Alarm is designed to be mounted on any standard wiring junction box up to a 4-inch (10 cm) size, on either the ceiling or wall (if allowed by local codes). Read "Recommended Locations For Smoke Alarms" and "Locations to Avoid For Smoke Alarms" before you begin installation.
Tools you will need: • **Needle-nose pliers** • **Standard Flathead screwdriver** • **Phillips screwdriver.**

⚠WARNING!Make sure the Alarm is not receiving excessively noisy power. Examples of noisy power could be major appliances on the same circuit, a power generator or solar power, light dimmer on the same circuit or mounted near fluorescent lighting. Excessively noisy power may cause damage to your Alarm.

THE PARTS OF THIS SMOKE ALARM

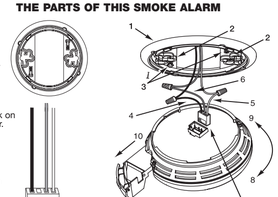

The Mounting Bracket:
To remove the mounting bracket from the Smoke Alarm base, hold the Smoke Alarm base firmly and twist the mounting bracket counterclockwise. The mounting bracket installs onto the junction box. It has a variety of screw slots to fit most boxes.

The Power Connector:
The power connector plugs into a power input block on the Smoke Alarm. It supplies the unit with AC power.

- The black wire is "hot."
- The white wire is neutral.
- The orange wire is used for interconnect.

If you need to remove the power connector, turn POWER OFF first. Insert a flat screwdriver blade between the power connector and the security tab inside the power input block. Gently pry back the tab and pull the connector free.

The Parts of This Unit

1	Mounting Bracket
2	Mounting Slots
3	Locking Pins (break out of bracket)
4	Hot (Black) AC Wire
5	Neutral (White) AC Wire
6	Interconnect (Orange) Wire
7	Quick-Connect Power Connector
8	Turn this way to remove from bracket
9	Turn this way to attach to bracket
10	Slide-Out Battery Drawer

QUICK INSTALLATION INSTRUCTIONS

Easily expand an existing interconnected 120V AC hardwired system by simply replacing one Alarm in the series with the First Alert® Model SA520. Then add additional battery-operated Alarms to expand the system with no additional electrical work.

1. Insert the batteries into the battery drawer of the **first** Alarm and close the drawer.
2. The Alarm will sound with a chirp.
3. If you purchased the Talking Smoke and Carbon Monoxide Alarm, you will now be prompted to set the Alarm's location. Follow the direction given by the Alarm.

NOTE: Steps 4 through 6 need to be completed within two minutes. If more than two minutes pass, the Green power LED will stop blinking. Simply open the battery drawer of the second Alarm and repeat steps 4 through 6.

4. Insert the batteries into the battery drawer of the **next** Alarm. DO NOT CLOSE THE DRAWER.
5. Press and hold the test button and then close the battery drawer.
6. Once you hear the unit chirp, release the test button. The Green power LED will start to blink indicating the WIRELESS INTERCONNECT Alarm is waiting for program data from one of the other setup WIRELESS INTERCONNECT Alarms.
7. Press and hold the test button on the first Alarm, until the second Alarm chirps and its Green power LED stops blinking. Then release the test button.
8. If you purchased the Talking Smoke and Carbon Monoxide Alarm, you will now be prompted to set the Alarm's location. Follow the directions given by the Alarm.
9. If you have purchased the hardwired battery back-up WIRELESS INTERCONNECT Alarm, you can now connect the hardwired Alarm by installing the three-wire connector on the ceiling to the ceiling. In the

10. Repeat steps 4-9 for additional WIRELESS INTERCONNECT Alarms.

You have now successfully linked your new WIRELESS INTERCONNECT Alarms. To add additional Alarms at a later time, follow steps 4 through 9.

FOLLOW THESE INSTALLATION STEPS

The basic installation of this Smoke Alarm is similar whether you want to install one Smoke Alarm, or interconnect more than one Smoke Alarm. If you are interconnecting more than one Smoke Alarm, you MUST read "Special Requirements For Interconnected Smoke Alarms" below before you begin installation.

⚠DANGER!

ELECTRICAL SHOCK HAZARD. Turn off power to the area where you will install this unit at the circuit breaker or fuse box before beginning installation. Failure to turn off the power before installation may result in serious electrical shock, injury or death.

1. Remove the mounting bracket from the base, and attach it to the junction box.
2. Using wire nuts, connect the power connector to the household wiring.

STAND-ALONE ALARM ONLY:

- Connect the white wire on the power connector to the neutral wire in the junction box.
- Connect the black wire on the power connector to the hot wire in the junction box.
- Tuck the orange wire inside the junction box. It is used for interconnect only.

INTERCONNECTED UNITS ONLY:
Strip off about 1/2" (12 mm) of the plastic coating on the orange wire on the power connector.

- Connect the white wire on the power connector to the neutral wire in the junction box.
- Connect the black wire on the power connector to the hot wire in the junction box.
- Connect the orange wire on the power connector to the interconnect wire in the junction box. Repeat for each unit you are interconnecting. Never connect the hot or neutral wires in the junction box to the orange interconnect wire. Never cross hot and neutral wires between Alarms.

3. Plug the power connector into the back of the Smoke Alarm.
4. Position the base of the Smoke Alarm over the mounting bracket and turn. The Alarm can be positioned over the bracket every 90°. Turn the Smoke Alarm clockwise (right) until the unit is in place.
5. Check all connections.

⚠WARNING!

Improper wiring of the power connector or the wiring leading to the power connector will cause damage to the Alarm and may lead to a non-functioning Alarm.

Continued above...

INSTALLATION STEPS, Continued

STAND-ALONE ALARM ONLY:

- **If you are only installing one Smoke Alarm, restore power to the junction box.**

INTERCONNECTED UNITS ONLY:

- **If you are interconnecting multiple Smoke Alarms, repeat steps 1-5 for each Smoke Alarm in the series. When you are finished, restore power to the junction box.**

⚠DANGER!

ELECTRICAL SHOCK HAZARD. Do not restore power until all Smoke Alarms are completely installed. Restoring power before installation is complete may result in serious electrical shock, injury or death.

6. Make sure the Smoke Alarm is receiving AC power. Under normal operation, the Green power indicator light will stay continuously.
7. If the Green power indicator light does not light, **TURN OFF POWER TO THE JUNCTION BOX** and recheck all connections. If all connections are correct and the Green power indicator still does not light when you restore the power, the unit should be replaced immediately.
8. Test each Smoke Alarm. Press and hold the Test/Silence button until the unit alarms. ***When testing a series of interconnected units you must test each unit individually. Make sure all units alarm when each one is tested.***

⚠DANGER!

If any unit in the series does not alarm, **TURN OFF POWER** and recheck connections. If it does not alarm when you restore power, replace it immediately.

Special Requirements For Interconnected Smoke Alarms

⚠WARNING!

- **Failure to meet any of the above requirements could damage the units and cause them to malfunction, removing your protection.**
- **AC and AC/DC Smoke Alarms can be interconnected. Under AC power, all units will alarm when one senses smoke. When power is interrupted, only the AC/DC units in the series will continue to send and receive signals. AC powered Smoke Alarms will not operate.**

Interconnected units can provide earlier warning of fire than stand-alone units, especially if a fire starts in a remote area of the dwelling. If any unit in the series senses smoke, all units will alarm. To determine which Smoke Alarm initiated an alarm, see table:

On Initiating Alarms	Red LED flashes rapidly
On All Other Alarms	Red LED is Off

IMPORTANT!

Interconnect units within a single family residence only. Otherwise all households will experience unwanted alarms when you test any unit in the series. Interconnected units will only work if they are wired to compatible units and all requirements are met. This unit is designed to be compatible with: ***First Alert®*** Smoke Alarm Models SA4120, SA4121B, SA100B, 9120 series and ***BRK Electronics®*** Smoke Alarm Models 100S, 4120 series, 9120 series, 7010 series; ***BRK Electronics®*** Heat Alarm Models HD6135F, HD6135FB; Smoke/CO Alarm Models SC6120B, SC9120B; CO Alarm Model CO5120B; Relay Modules RM3 and RM4.

Interconnected units must meet ALL of the following requirements:

- A maximum of 18 compatible units may be interconnected (Maximum of 12 Smoke Alarms).
- The same fuse or circuit breaker must power all interconnected units.
- The total length of wire interconnecting the units should be less than 1000 feet (300 meters). This type of wire is commonly available at Hardware and Electrical Supply stores.
- All wiring must conform to all local electrical codes and NFPA 70 (NEC). Refer to NFPA 72, NFPA 101, and/or your local building code for further connection requirements.

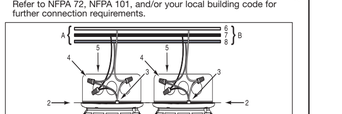

A. Unswitched 120VAC 60 Hz source
B. To additional units; Maximum = 18 total (Maximum 12 Smoke Alarms)

1. Smoke Alarm	4. Wire Nut	7. Interconnect Wire (Orange)
2. Ceiling or Wall	5. Junction Box	8. Hot Wire (Blk)
3. Power Connector	6. Neutral Wire (Wht)	

OPTIONAL LOCKING FEATURES

The locking features are designed to discourage unauthorized removal of the battery or Alarm. It is not necessary to activate the locks in single-family households where unauthorized battery or Alarm removal is not a concern.

These Smoke Alarms have two separate locking features: one to lock the battery compartment, and the other to lock the Smoke Alarm to the mounting bracket. You can choose to use either feature independently, or use them both.

Tools you will need: • Needle-nose pliers • Standard Flathead screwdriver.

Both locking features use locking pins, which are molded into the mounting bracket. Using needle-nose pliers, remove one or both pins from the mounting bracket, depending on how many locking features you want to use.

IMPORTANT!

To permanently remove either lock, insert a flathead screwdriver between the locking pin and the lock, and pry the pin out of the lock.

TO LOCK THE BATTERY COMPARTMENT

Do not lock the battery compartment until you have installed the battery and tested the battery back-up.

1. Push and hold Test/Silence button until the alarm sounds: 3 beeps, pause, 3 beeps, pause.

IMPORTANT!

If the unit does not alarm during testing, DO NOT lock the battery compartment and replace the battery and test again. If the Smoke Alarm still does not alarm, replace it immediately.

2. Using needle-nose pliers, detach one locking pin from the mounting bracket.
3. Push the locking pin through the hole near the battery drawer on the back of the Smoke Alarm.

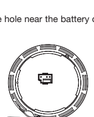

TO UNLOCK THE BATTERY COMPARTMENT

IMPORTANT!

Once the Smoke Alarm is installed, you must disconnect it from the AC power before unlocking the battery compartment.

⚠DANGER!

ELECTRICAL SHOCK HAZARD. Turn off the power to the area where the Smoke Alarm is installed before removing it from the mounting bracket. Failure to turn off the power first may result in serious electrical shock, injury or death.

⚠WARNING!

Always discharge the branch circuit before servicing an AC or AC/DC Smoke Alarm. First, turn off the AC power at the circuit breaker or fuse box. Next, remove the battery from Smoke Alarms with battery back-up. Finally, press and hold the Test/Silence button for 5-10 seconds to discharge the branch circuit.

1. Remove the Smoke Alarm from the mounting bracket. If the unit is locked to the bracket, see the section "To Unlock the Mounting Bracket."
2. Disconnect the power connector by gently prying it away from the back of the Smoke Alarm.
3. Insert a flathead screwdriver under the head of the locking pin, and gently pry it out of the battery compartment lock. (If you plan to relock the battery compartment, save the locking pin.)
4. To relock the battery compartment, close the battery door and reinsert locking pin in lock.
5. Reconnect the power connector to the back of the Smoke Alarm, reattach the Smoke Alarm to the mounting bracket, and restore the power.

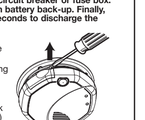

IMPORTANT!

When replacing the battery, always test the Smoke Alarm before relocking the battery compartment.

Locking Features, Continued

TO LOCK THE MOUNTING BRACKET

1. Using needle-nose pliers, detach one locking pin from mounting bracket.
2. Insert the locking pin into the lock located opposite from the battery drawer as shown in the diagram.

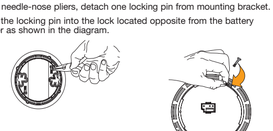

3. When you attach the Smoke Alarm to the mounting bracket, the locking pin's head will fit into a notch on the bracket.

TO UNLOCK THE MOUNTING BRACKET

⚠DANGER!

ELECTRICAL SHOCK HAZARD. Turn off power to the area where the Smoke Alarm is installed before removing it from the mounting bracket. Failure to turn off the power first may result in serious electrical shock, injury or death.

⚠WARNING!

Always discharge the branch circuit before servicing an AC or AC/DC Smoke Alarm. First, turn off the AC power at the circuit breaker or fuse box. Next, remove the battery from Smoke Alarms with battery back-up. Finally, press and hold the Test/Silence button for 5-10 seconds to discharge the branch circuit.

1. Insert a flathead screwdriver between the mounting bracket pin and the mounting bracket.
2. Pry the Smoke Alarm away from the bracket by turning both the screwdriver and the Smoke Alarm counterclockwise (left) at the same time.

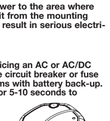

UNDERSTANDING THE INDICATOR LIGHTS AND ALARM HORN PATTERNS

	All Models	DC Power
AC Power		
Normal Operation	Constant Green LED	Green LED Off
	No Audible Alarm	No Audible Alarm
Test Condition	Constant Green LED	Green LED Off
	Rapidly Flashing Red LED	Rapidly Flashing Red LED
	Audible Alarm	Audible Alarm
Alarm Condition* (Initiating Unit)	Constant Green LED	Green LED Off
	Rapidly Flashing Red LED	Rapidly Flashing Red LED
	Audible Alarm	Audible Alarm
Silence Mode	Rapidly Flashing Red LED	Rapidly Flashing Red LED
Low Battery	Alarm "chirp" approx. once/minute	Alarm "chirp" approx. once/minute
Malfunction	3 rapid "chirps" every minute; LED flashes approx. once a minute	3 rapid "chirps" every minute; LED flashes approx. once a minute

NOTE: When power is applied, unit(s) may alarm momentarily.
*When any Smoke Alarm in an interconnect series triggers an alarm, its red LED will flash rapidly. The red LEDs will remain OFF on any remaining alarms in the series. This feature helps responders identify which unit(s) triggered the alarm.

WEEKLY TESTING

⚠WARNING!

- **NEVER use an open flame of any kind to test this unit. You might accidentally damage or set fire to the unit or to your home. The built-in test switch accurately tests the unit's operation as required by Underwriters Laboratories, Inc. (UL).**
- **If the Alarm ever fails to test properly, replace it immediately. Products under warranty may be returned to the manufacturer for replacement. See "Limited Warranty" at the end of this manual.**

⚠CAUTION!

DO NOT stand close to the Alarm when the horn is sounding. Exposure at close range may be harmful to your hearing. When testing, step away when horn starts sounding.

It is important to test this unit every week to make sure it is working properly. Using the test button is the recommended way to test this Smoke Alarm. Press and hold the test button on the cover of the unit until the alarm sounds (the unit may continue to alarm for a few seconds after you release the button). If it does not alarm, make sure the unit is receiving power and test it again. If it still does not alarm, replace it immediately.
During testing, you will hear a loud, repeating horn pattern: 3 beeps, pause, 3 beeps, pause.

When testing a series of interconnected units you must test each unit individually. Make sure all units alarm when each one is tested.

REGULAR MAINTENANCE

This unit has been designed to be as maintenance-free as possible, but there are a few simple things you must do to keep it working properly:

- Test it at least once a week.
- Clean the Smoke Alarm at least once a month; gently vacuum the outside of the Smoke Alarm using your household vacuum's soft brush attachment. Test the Smoke Alarm. Never use water, cleaners or solvents since they may damage the unit.
- If the Smoke Alarm becomes contaminated by excessive dirt, dust and/or grime, and cannot be cleaned to avoid unwanted alarms, replace the unit immediately.
- Relocate the unit if it sounds frequent unwanted alarms. See "Locations To Avoid For Smoke Alarms" for details.
- When the battery back-up becomes weak, the Smoke Alarm will "chirp" about once a minute (the low battery warning). This warning should last 7 days, but you should replace the batteries immediately to continue your protection.

Choosing a replacement battery:
Your Smoke Alarm requires 2 "AA" Duracell MN1500 batteries.
These batteries are available at many local retail stores.

⚠WARNING!

- **Always use the exact batteries specified by this User's Manual. DO NOT use rechargeable batteries. Clean the battery contacts and also those of the device prior to battery installation. Install batteries correctly with regard to polarity (+ and -).**
- **Please dispose of or recycle used batteries properly, following any local regulations. Consult your local waste management authority or recycling organization to find an electronics recycling facility in your area. DO NOT DISPOSE OF BATTERIES IN FIRE. BATTERIES MAY EXPLODE OR LEAK.**

⚠WARNING!

- **Keep battery out of reach of children. In the event a battery is swallowed, immediately contact your poison control center, your physician, or the National Battery Ingestion hotline at 202-625-3333 as serious injury may occur.**

IMPORTANT!

Actual battery service life depends on the smoke alarm and the environment in which it is installed. All the batteries specified above are acceptable replacement batteries for this unit. Regardless of the manufacturer's suggested battery life, **you MUST replace the battery immediately once the unit starts "chirping" (the "low battery warning").**

To replace the batteries (without removing Alarm from the ceiling or wall):

1. Open the battery compartment.
2. Press tabs A and B as shown in the diagram and remove each battery.
3. Insert the new batteries, making sure they snap completely into the battery compartment. Match the terminals on the ends of the batteries with the terminals on the unit.
4. Close the battery compartment, and then test the unit by pressing the Test/Silence button.

WIRELESS OPERATION

First Alert® WIRELESS INTERCONNECT Technology is the easy, cost-effective way to provide your family with whole-home safety. All WIRELESS INTERCONNECT Alarms communicate with each other without wires or connectors. When one Alarm sounds, they all sound. This provides your family with an earlier warning of potential danger, and gives you more time to react.

The communication distance (range) between any two WIRELESS INTERCONNECT Alarms is typically 50 feet (15 meters) inside of a home. Some features of a home, such as the number of floors, number/size of rooms, furniture and types of building materials used may reduce the range of the Alarms. Examples include: suspended ceilings, ductwork, large metallic appliances (refrigerators) and metal studs. A feature of WIRELESS INTERCONNECT Alarms is that they operate as a mesh network. All Alarms will repeat any alarm signal that is received to all other WIRELESS INTERCONNECT Alarms. Installation problems from structural conditions can be overcome by adding additional Alarms to route the wireless signal around obstructions.

IMPORTANT!

- **The range and proper operation of any wireless device will vary depending on its surroundings. It is very important that each Alarm is tested individually before and after installation to make sure that all Alarms respond properly.**
- **The WIRELESS INTERCONNECT Alarms are not to be used outdoors or to transmit between buildings. The Alarms will not communicate properly under these conditions.**
- **Metal objects and metallic wallpaper may interfere with signals from wireless Alarms. Alarms should be tested after changes to your home such as remodeling, moving furniture, and with metal doors opened and closed.**

Your First Alert® WIRELESS INTERCONNECT Smoke Alarm will automatically communicate potential fires with all other First Alert® WIRELESS INTERCONNECT Smoke Alarms.

⚠CAUTION!

Changes or modifications not expressly approved by BRK Brands, Inc. could void the user's authority to operate the equipment.

IF THIS SMOKE ALARM SOUNDS

RESPONDING TO AN ALARM

During an alarm, you will hear a loud, repeating horn pattern: 3 beeps, pause, 3 beeps, pause.

⚠WARNING!

- **If the unit alarms and you are not testing the unit, it is warning you of a potentially dangerous situation that requires your immediate attention. NEVER ignore any alarm. Ignoring the alarm may result in injury or death.**
- **Never disconnect the AC power to quiet an unwanted alarm. Disconnecting the power disables the Alarm so it cannot sense smoke. This will remove your protection. Instead, open a window or fan the smoke away from the unit. The Alarm will reset automatically.**
- **If the unit alarms get everyone out of the house immediately.**

⚠DANGER!

- **ELECTRICAL SHOCK HAZARD: Attempting to disconnect the power connector from the unit when the power is on may result in electrical shock, serious injury or death.**

When an interconnected system of AC powered units is in alarm, the alarm indicator light on the unit(s) that initiated the alarm will blink rapidly. It will remain OFF on any remaining units.

If the unit alarms, get everyone out of the dwelling immediately.

If the unit alarms and you are certain that the source of smoke is not a fire—cooking smoke or an extremely dusty furnace, for example—open a nearby window or door and fan the smoke away from the unit (Use the Silence Feature to silence the Alarm). This will silence the alarm, and once the smoke clears the unit will reset itself automatically.

WHAT TO DO IN CASE OF FIRE

- Don't panic; stay calm. Follow your family escape plan.
- Get out of the house as quickly as possible. Don't stop to get dressed or collect anything.
- Feel doors with the back of your hand before opening them. If a door is cool, open it slowly. Don't open a hot door. Keep doors and windows closed, unless you must escape through them.
- Cover your nose and mouth with a cloth (preferably damp). Take shallow breaths.
- Meet at your planned meeting place outside your home, and do a head count to make sure everybody got out safely.
- Call the Fire Department as soon as possible from outside. Give your address, then your name.
- Never go back inside a burning building for any reason.
- Contact your Fire Department for ideas on making your home safer.

⚠WARNING!

Alarms have various limitations. See "Limitations of Smoke Alarms" for details.

USING THE SILENCE FEATURE

The Silence Feature can temporarily quiet an unwanted alarm for up to 15 minutes.

⚠WARNING!

The Silence Feature does not disable the unit—it makes it temporarily less sensitive to smoke. For your safety, if smoke around the unit is dense enough to suggest a potentially dangerous situation, the unit will stay in alarm or may re-alarm quickly. If you do not know the source of the smoke, do not assume it is an unwanted alarm. Not responding to an alarm can result in property loss, injury, or death.

To silence Smoke Alarms in an interconnected series:

1. To silence multiple alarms in an interconnected series, you must press the Test/Silence button on the unit(s) that triggered the alarm.
2. Once you activate the Silence feature, the Red LED will continue to flash rapidly.
3. Pressing the Test/Silence button when in silence will restart the silence timer.

IMPORTANT!

The Silence Feature on these units can temporarily quiet an unwanted alarm for up to 15 minutes. To use this feature, press the Test/Silence button on the cover. **If the unit will not silence and no heavy smoke is present, or if it stays in silence mode continuously, it should be replaced immediately.**

SILENCING THE LOW BATTERY WARNING

This silence feature can temporarily quiet the low battery warning "chirp" for up to 8 hours. You can silence the low battery warning "chirp" by pressing the Test/Silence button on the alarm cover.

Once the low battery warning "chirp" silence feature is activated, the unit continues to flash the Green light twice a minute for 8 hours. After 8 hours, the low battery "chirp" will resume. **Replace the batteries as soon as possible; this unit will not operate without battery power!**

To deactivate this feature: Press the Test/Silence button again. The unit will go into Test Mode and the low battery warning will resume (LED flashes and unit sounds "chirp" once a minute).

IF YOU SUSPECT A PROBLEM

Smoke Alarms may not operate properly because of dead, missing or weak batteries, a build-up of dirt, dust or grease on the Smoke Alarm cover, or installation in an improper location. Clean the Smoke Alarm as described in "Regular Maintenance," and install a fresh battery, then test the Smoke Alarm again. If it fails to test properly when you use the test button, or if the problem persists, replace the Smoke Alarm immediately.

- **If you hear a "chirp" approximately once a minute, replace the batteries.**
- **If you experience frequent non-emergency alarms (like those caused by cooking smoke), try relocating the Smoke Alarm.**
- **If the alarm sounds when no smoke is visible, try cleaning or relocating the Smoke Alarm. The cover may be dirty.**
- **If the alarm does not sound during testing, make sure it is receiving AC power from the household current.**

⚠WARNING!

Always discharge the branch circuit before servicing an AC or AC/DC Smoke Alarm. First, turn off the AC power at the circuit breaker or fuse box. Next, remove the battery from Smoke Alarms with battery back-up. Finally, press and hold the test button for 5-10 seconds to discharge the branch circuit.

Do not try fixing the alarm yourself – this will void your warranty!

If the Smoke Alarm is still not operating properly, and it is still under warranty, please see "How to Obtain Warranty Service" in the Limited Warranty.

RECOMMENDED LOCATIONS FOR SMOKE ALARMS

Installing Smoke Alarms in Single-Family Residences

The National Fire Protection Association (NFPA), recommends one Smoke Alarm on every floor, including sleeping areas, and in every bedroom. In new construction, the Smoke Alarms must be AC powered and interconnected. See "Agency Placement Recommendations" for details. For additional coverage, it is recommended that you install a Smoke Alarm in all rooms, halls, storage areas, finished attics, and basements, where temperatures normally remain between 40° F (4.4° C) and 100° F (37.8° C). Make sure no door or other obstruction could keep smoke from reaching the Smoke Alarms.

More specifically, install Smoke Alarms:

- On every level of your home, including finished attics and basements.
- Inside every bedroom, especially if people sleep with the door partly or completely closed.
- In the hall near every sleeping area. If your home has multiple sleeping areas, install a unit in each. If a hall is more than 40 feet long (12 meters), install a unit at each end.
- At the top of the first-to-second floor stairway, and at the bottom of the basement stairway.

Specific requirements for Smoke Alarm installation vary from state to state and from region to region. Check with your local Fire Department for current requirements in your area. **It is recommended AC or AC/DC units be interconnected for added protection.**

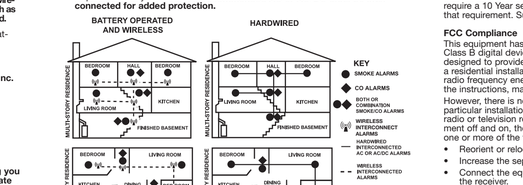

AGENCY PLACEMENT RECOMMENDATIONS

NFPA 72 Chapter 29

"For your information, the **National Fire Alarm and Signaling Code**, NFPA 72, reads as follows:"

29.5.1* Required Detection.

29.5.1.1* Where required by other governing laws, codes, or standards for a specific type of occupancy, approved single and multiple-station smoke alarms shall be installed as follows:

(1)*In all sleeping rooms and guest rooms
(2)*Outside of each separate dwelling unit sleeping area, within 21 ft (6.4 m) of any door to a sleeping room, with the distance measured along a path of travel
(3) On every level of a dwelling unit, including basements
(4) On every level of a residential board and care occupancy (small facility), including basements and excluding crawl spaces and unfinished attics
(5)*In the living area(s) of a guest suite
(6) In the living area(s) of a residential board and care occupancy (small facility)

(Reprinted with permission from NFPA 72®, National Fire Alarm and Signaling Code Copyright © 2010 National Fire Protection Association, Quincy, MA 02269. This reprinted material is not the complete and official position of the National Fire Protection Association, on the referenced subject which is represented only by the standard in its entirety), (National Fire Alarm and Signaling Code® and NFPA 72® are registered trademarks of the National Fire Protection Association, Inc., Quincy, MA 02269).

LOCATIONS TO AVOID FOR SMOKE ALARMS

For best performance, AVOID installing Smoke Alarms in these areas:

- Where combustion particles are produced. Combustion particles form when something burns. Areas to avoid include poorly ventilated kitchens, garages, and furnace rooms. Keep units at least 20 feet (6 meters) from the sources of combustion particles (stove, furnace, water heater, space heater) if possible. In areas where a 20-foot distance is not possible – in modular, mobile, or smaller homes, for example – it is recommended the Smoke Alarm be placed as far from these fuel-burning sources as possible. The above recommendations are intended to keep these Alarms at a reasonable distance from a fuel-burning source, and thus reduce "unwanted" alarms. Unwanted alarms can occur if a Smoke Alarm is placed directly next to a fuel-burning source. Ventilate these areas as much as possible.
- In air streams near kitchens. Air currents can draw cooking smoke into the sensing chamber of a Smoke Alarm near the kitchen.
- In very damp, humid or steamy areas, or directly near bathrooms with showers. Keep units at least 10 feet (3 meters) away from showers, saunas, dishwashers, etc.
- Where the temperatures are regularly below 40° F (4.4° C) or above 100° F (37.8° C) including unheated buildings, outdoor rooms, porches, or unfinished attics or basements.
- In very dusty, dirty, or greasy areas. Do not install a Smoke Alarm directly over the stove or range. Clean a laundry room unit frequently to keep it free of dust or lint.
- Near fresh air vents, ceiling fans, or in very drafty areas. Drafts can blow smoke away from the unit, preventing it from reaching sensing chamber.
- In insect infested areas. Insects can clog openings to the sensing chamber and cause unwanted alarms.
- Less than 12 inches (305 mm) away from fluorescent lights. Electrical "noise" can interfere with the sensor.
- In "dead air" spaces. "Dead air" spaces may prevent smoke from reaching the Smoke Alarm.

AVOIDING DEAD AIR SPACES

"Dead air" spaces may prevent smoke from reaching the Smoke Alarm. To avoid dead air spaces, follow the installation recommendations below.

On ceilings, install Smoke Alarms as close to the center of the ceiling as possible. If this is not possible, install the Smoke Alarm at least 4 inches (102 mm) from the wall or corner.

For wall mounting (if allowed by building codes), the top edge of Smoke Alarms should be placed between 4 inches (102 mm) and 12 inches (305 mm) from the wall/ceiling line, below typical "dead air" spaces.

On a peaked, gabled, or cathedral ceiling, install the first Smoke Alarm within 3 feet (0.9 meters) of the peak of the ceiling, measured horizontally. Additional Smoke Alarms may be required depending on the length, angle, etc. of the ceiling's slope. Refer to NFPA 72 for details on requirements for sloped or peaked ceilings.

ABOUT SMOKE ALARMS

Battery (DC) operated Smoke Alarms: Provide protection even when electricity fails, provided the batteries are fresh and correctly installed. Units are easy to install, and do not require professional installation.

AC powered Smoke Alarms: Can be interconnected so if one unit senses smoke, all units alarm. They do not operate if electricity fails.
AC with battery (DC) back-up: will operate if electricity fails, provided the batteries are fresh and correctly installed. AC and AC/DC units must be installed by a qualified electrician.

WIRELESS INTERCONNECT Smoke Alarms with battery (DC) back-up: Interconnects with all WIRELESS INTERCONNECT enabled Smoke and Smoke/CO Alarms without wires or connectors, so when one alarm sounds, they all sound. Will operate if electricity fails, provided the batteries are fresh and correctly installed. Units are easy to install, and do not require professional installation.

Smoke Alarms for Solar or Wind Energy users and battery backup power systems: AC powered Smoke Alarms should only be operated with true or pure sine wave inverters. Operating this Smoke Alarm with most battery-powered UP

First Alert

MANUAL DEL USUARIO

DETECTOR DE HUMO INTERCONECTADO INALÁMBRICA CON ALIMENTACIÓN DE CA Y BATERÍA DE RESPALDO

¡IMPORTANTE!
LEA CUIDADOSAMENTE Y CONSERVE ESTAS INSTRUCCIONES.
Este manual del usuario contiene importante información sobre el funcionamiento del detector de humo. Si se va a instalar esta unidad para que la usen otras personas, deje el manual o una copia de éste con los usuarios.

Impreso en México
M08-0149-008 **Q**
05/15

CUMPLE CON LA NORMA UL 217

Modelo SA520

© 2015 BRK Brands, Inc. Todos los derechos reservados.
Distribuido por BRK Brands, Inc.
3901 Liberty Street Road, Aurora, IL 60504-8122
Atención al consumidor: (800) 323-9005 • www.firstalert.com

Todas las Alarmas de humo y fuego de First Alert® y BRK®, conforme a todos los reglamentos y requerimientos incluyendo UL217 estan diseñadas para detectar particulas de combustión. Las particulas del humo del número y de la talla que varian se producen en todos los fuegos.

La tecnología de la ionización es generalmente más sensible que tecnología fotoéléctrica en la detección de las partículas pequeñas, que tienden para ser producidas en mayores cantidades por los fuegos llameantes, qui consumen los materiales combustibles rápidamente y se separan rápidamente. Entre las fuentes que originan estos incendios se incluyen papeles quemados en cestos de basura o incendios provocados por la combustión de grasa en la cocina.

La tecnología fotoeléctrica es generalmente más sensible que tecnología de la ionización en la detección de las partículas grandes, que tienden para ser producidas en menores cantidades por los incendios lentos y humeantes, que despiden humo durante horas antes de estallar en llamas. Entre las fuentes que originan estos incendios se incluyen los cigarrillos que arden en sofás o camas.

Para obtener una máxima seguridad, instale ambos detectores en cada uno de los niveles del hogar.

SUGERENCIAS DE SEGURIDAD EN CASO DE INCENDIO

Siga las normas de seguridad y evite situaciones peligrosas: 1) Cree un forma correcta todos los materiales relacionados con el hábito de fumar. Nunca fume en la cama; 2) Mantenga los cerillos, encendedores y encendedores de gas fuera del alcance de los niños; 3) Almacene los materiales inflamables en envases adecuados; 4) Mantenga en buenas condiciones los artefactos eléctricos y no sobrecargue los circuitos eléctricos; 5) Mantenga las cocinas, parrillas para asados, y chimeneas sin grasa ni mugre; 6) Nunca deje algo cocinándose sin atender; 7) Mantenga las estufas portátiles y toda llama abierta, lejos de las velas, lejos de materiales inflamables; 8) No deje que se acumulen desperdicios.

Mantenga los detectores limpios y pruébelos semanalmente. Reemplácelas de inmediato si no están funcionando correctamente. Los detectores de humo que no funcionan no pueden alertarle en caso de incendio. Mantenga al menos un extintor de incendios en cada piso y uno adicional en la cocina. Tenga escaleras de escape de incendios u otros medios confiables de escape de un piso superior en caso de que las escaleras queden bloqueadas.

ANTES DE INSTALAR ESTE DETECTOR

¡IMPORTANTE!
Antes de comenzar, lea las secciones "Lugares recomendados para localizar detectores de humo" y "Lugares donde se debe evitar localizar detectores de humo". Esta unidad controla el aire y, cuando el humo llega hasta la cámara de detección, hace sonar la alarma. Puede brindarle suficiente tiempo para escapar antes de que el fuego se propague. Esta unidad SOLO está diseñada para proporcionar una advertencia oportuna si se instala, mantiene y ubica donde el humo pueda llegar a ella, y donde todos los residentes puedan oirla, tal como se describe en este manual. Esta unidad no detectará gases, calor ni llamas. No puede impedir ni apagar incendios.

Conozca los diferentes tipos de detectores de humo

¿Fotoeléctrico o de ionización? ¿Alimentado con batería o eléctrico? Los diferentes tipos de detectores de humo proporcionan diferentes tipos de protección. Encontrará más detalles al respecto en la sección "Información general sobre los detectores de humo".

Sepa dónde debe instalar los detectores de humo

Los profesionales de seguridad en caso de incendio recomiendan por lo menos un detector de humo en cada nivel de su hogar, en cada dormitorio y en cada pasillo o corredor que conduzca a un dormitorio o que separe los dormitorios de alguien duerma. Encontrará más detalles al respecto en los apartados "Lugares recomendados para localizar detectores de humo" y "Lugares donde se debe evitar localizar detectores de humo".

Sepa lo que los detectores de humo pueden y no pueden hacer

Un detector de humo puede ayudarle a alertarle con respecto a un incendio, dándole el tiempo necesario para escapar. Este sólo puede emitir una alarma una vez que el humo llegue al sensor. Encontrará más detalles al respecto en la sección "Limitaciones de los detectores de humo".

Consulte sus códigos de construcción locales

Este detector de humo está diseñado para ser usado en una típica casa de familia. Por sí solo no cumplirá con los requisitos para casas de huéspedes o pensiones, edificios de apartamentos, hoteles o moteles. Encontrará más detalles al respecto en la sección "Consideraciones especiales de acatamiento".

¡PELIGRO!

PELIGRO DE DESCARGAS ELECTRICAS. Antes de comenzar a instalar la unidad, desconecte la alimentación en el cortacircuito o caja de fusibles del área donde se va a efectuar la instalación. De otro modo se pueden producir descargas eléctricas que podrían ocasionar graves lesiones, incluso la muerte.

¡ADVERTENCIA!

- **Esta unidad no está diseñada para personas con problemas de audición. Se recomienda instalar unidades especiales que tengan luces estroboscópicas para los residentes con problemas de audición.**
- **Esta unidad se debe instalar según las normas de seguridad de su localidad; el artículos 210 y 300.3 (B) del NFPA 70 (NEC), NFPA 72, NFPA 101; SBC (SBCCI); UBC (ICBO); NBC (BOCA); OTFDC (CABO), y cualquier otra norma de seguridad de su localidad. El cableado y la instalación debe llevarlas a cabo un electricista autorizado. El no seguir estas normas puede causar lesiones personales o daños a la propiedad.**
- **Esta unidad debe ser alimentada por un circuito puro de la onda del seno de CA de 60 Hz y 120 voltios las 24 horas al día. Cerciórese de que el circuito no se pueda apagar mediante un interruptor, reductor o un interruptor con circuito de corriente de pérdida a tierra. Si no se conecta a un circuito que esté activado las 24 horas al día, la unidad no brindará protección constante.**
- **Este detector debe tener la CA o potencia de batería de funcionar. Si la corriente ALTERNA falla, el respaldo de la batería permitirá que el alarmar suene por lo menos 4 minutos. Si la corriente ALTERNA falla y si la batería es débil, protección si durar por lo menos 7 días. Si la corriente ALTERNA falla y la batería falla muerta o, el alarmar no puede funcionar.**
- **Nunca desconecte la potencia de una unidad alimentada por CA para silenciar una alarma no deseada. Al hacerlo se desactivará la unidad y su hogar quedará sin protección. Si se produce un falsa alarma, abra una ventana o ventile para alejar el humo de la unidad. La alarma se reinicializará automáticamente cuando la unidad vuelva a funcionar normalmente. Nunca desconecte la batería para silenciar una alarm no deseada (por ejemplo humo proveniente de la cocina). Abra una ventana o puerta cercana y ventile para alejar el humo de la unidad. La alarma se reinicializará automáticamente una vez que el humo se haya despejado.**

¡PRECAUCIÓN!

- **Conecte esta unidad SOLAMENTE a otras unidades compatibles. Vea la sección "Cómo instalar e interconectar este detector" para obtener mayores detalles. No lo conecte a ningún otro tipo de alarma o dispositivo auxiliar. Conectar cualquier otro cosa a esta unidad puede dañarla o prevenir que funcione correctamente.**
- **Este detector de humo tiene una gaveta para la batería que no se puede cerrar si no hay una batería instalada. Esta medida de seguridad le advierte que la protección adicional no funcionará sin la batería.**
- **No se ubique demasiado cerca de la unidad cuando la alarma esté sonando. El sonido de la alarma es lo suficientemente fuerte para despertarlo en caso de emergencia. El exponerse demasiado cerca a la bocina puede afectar la audición.**
- **No pinte la unidad. La pintura puede obstruir los orificios de la cámara de detección e impedir que la unidad funcione correctamente.**

CÓMO INSTALAR ESTE DETECTOR DE HUMO

Esta unidad está diseñada para ser montada en cualquier caja de empalmes estándar de 10 cm (4 pulg.) tanto en la pared como en el cielo raso. Antes de comenzar la instalación, consulte las secciones "Lugares recomendados para localizar detectores de humo" y "Lugares donde se debe evitar localizar detectores de humo".
Herramientas necesarias: • Pinzas con puntas de aguja • Destornillador de cabeza plana estándar • Destornillador de cabeza Phillips

¡ADVERTENCIA!

Asegúrese que el detector no reciba corriente con exceso de ruido. Ejemplos de corriente con ruido podrían ser electrodomésticos grandes en el mismo circuito, energía proveniente de un generador o energía solar, un atenuador de luz en el mismo circuito o el montaje cerca de luces fluorescentes. La corriente con exceso de ruido puede producir daños en su detector.

PARTES DEL DETECTOR

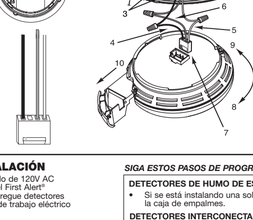

Entrada:
CA ~ de 120 voltios y 60 Hz, 0,09A

El soporte de montaje
Para entre en boca de montaje de la base del detector, sujete firmemente esta última y gire el soporte en sentido contrario a las manecillas del reloj. El soporte de montaje se instala sobre la caja de empalmes. Cuenta con diversas ranuras para tornillos de modo que puede adaptarse a la mayoría de las cajas.

El conector de alimentación: El conector de alimentación, que proporciona CA a la unidad, se enchufa en el bloque de entrada de alimentación.
- El alambre negro es el activo.
- El alambre blanco es el neutro
- El alambre anaranjado se usa para la interconexión.

Si debe retirar el conector que suministra corriente, CORTE LA CORRIENTE primero. Introduzca la punta del destornillador plano entre el conector de alimentación y la lengüeta de seguridad dentro del bloque de alimentación de entrada. Haga palanca suavemente para levantar la lengüeta y retire el conector.

Piezas de esta unidad	
1	Soporte de montaje
2	Ranura de montaje
3	Pasadores de cierre (sobresalen del soporte)
4	Alambre de CA activo (negro)
5	Alambre de CA neutro (blanco)
6	Alambre de interconexión (anaranjado)
7	Enchufe de conexión rápida
8	Perno de ésta dirección para quitarlo del soporte
9	Girelo en esta dirección para conectarlo al soporte
10	Gaveta extraíble de la batería

INSTRUCCIONES RÁPIDAS DE INSTALACIÓN

Extienda fácilmente cualquier sistema interconectado cableado de 120V AC simplemente reemplazando un dispositivo en la cadena con el First Alert® INTERCONECTADO INALÁMBRICA Modelo SA520. Hasta 12 de detectores a batería adicionales para expandir el sistema sin necesidad de trabajo eléctrico extra.

1. Inserte las baterías en el cajón de baterías del **primer** detector y luego ciérrelo.
2. El detector emitirá un chirrido.
3. Si compró el detector de Humo y Monóxido de Carbono con Voz, ahora le será solicitada la ubicación del detector. Siga las instrucciones dadas por el detector.

NOTA: Tiene dos minutos para completar los pasos 4 al 6. Si pasan más de dos minutos, el LED verde de encendido dejará de parpadear. Simplemente abra el cajón de baterías del segundo detector y repita los pasos 4 al 6.

4. Inserte las baterías en el cajón de baterías del **próximo** detector. NO CIERRE EL CAJÓN.
5. Pulse y mantenga presionado el botón de prueba y luego cierre el cajón de baterías.
6. Una vez que escuche el chirrido de la unidad, suelte el botón. El LED verde de encendido comenzará a parpadear indicando que el detector INTERCONECTADO INALÁMBRICA está esperando datos de programación de uno de los otros detectores INTERCONECTADO INALÁMBRICA configurados.
7. Pulse y mantenga presionado el botón de prueba del primer detector hasta que el segundo detector emita un chirrido y su LED verde de encendido deje de parpadear. Luego suelte el botón de prueba.
8. Si compró el detector de Humo y Monóxido de Carbono con Voz, ahora le será solicitada la ubicación del detector. Siga las instrucciones dadas por el detector.
9. Si ha comprado el detector cableado INTERCONECTADO INALÁMBRICA con batería de respaldo, puede ahora conectar el detector cableado en lugar del detector de humo. Conecte los conductores que está sobre el cielorraso al detector.
10. Repita los pasos 4 al 9 para los detectores INTERCONECTADO INALÁMBRICA adicionales.

Ahora, ha logrado enlazar con éxito sus nuevos detectores INTERCONECTADO INALÁMBRICA. Para agregar detectores adicionales en otro equipo en el caso de los pasos 4 al 9.

SIGA ESTOS PASOS DE PROGRESIÓN

La instalación básica de este detector de humo es la similar si usted desea instalar un detector de humo, o interconectar más de un detector de humo. Si usted está interconectando más de un detector, usted DEBE leer los "Requisitos especiales para los detectores interconectadas del humo" abajo antes de que usted comience la instalación.

¡PELIGRO!

PELIGRO DE DESCARGAS ELECTRICAS. Antes de comenzar a instalar la unidad, desconecte la alimentación en el cortacircuito o caja de fusibles del área donde se va a efectuar la instalación. De otro modo se pueden producir descargas eléctricas que podrían ocasionar graves lesiones, incluso la muerte.

¡ADVERTENCIA!

Esta unidad no está diseñada para personas con problemas de audición. Se recomienda instalar unidades especiales que tengan luces estroboscópicas para los residentes con problemas de audición.

DETECTORES DE HUMO DE ESTACIÓN ÚNICA SOLAMENTE:
- Una el alambre blanco del conector de alimentación al alambre neutro de la caja de empalmes.
- Una el alambre negro del conector de alimentación al alambre activo de la caja de empalmes.
- Doble el alambre anaranjado hacia el interior de la caja de empalmes, éste sólo se usa para la interconexión.

DETECTORES INTERCONECTADAS SOLAMENTE:
Pele aproximadamente 12 mm (1/2 pulg.) de revestimiento plástico del alambre anaranjado del conector de alimentación.
- Una el alambre blanco del conector de alimentación al alambre neutro de la caja de empalmes.
- Una el alambre negro del conector de alimentación al alambre activo de la caja de empalmes.
- Conecte el alambre anaranjado del conector de alimentación al alambre de interconexión de la caja de empalmes. Repita este procedimiento en todas las unidades que se estén interconectando. (Nunca conecte un alambre activo o neutro de la caja de empalmes al alambre de interconexión anaranjado!

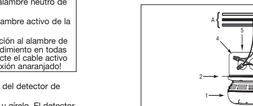

A. Fuente sin interruptor de 120 voltios CA y 60Hz

B. Para unidades adicionales (Máx 18) (Máx. 12 detectores de humo)

3. Enchufe el conector de alimentación en la parte posterior del detector de humo.
4. Coloque la base del detector sobre el soporte de montaje y gírelo. El detector puede colocar cada 90° sobre el soporte. Gire la unidad en sentido de las manecillas del reloj (hacia la derecha) hasta que quede trabada en su lugar.
5. Controle todas las conexiones eléctricas.

¡ADVERTENCIA!

El cableado incorrecto del conector eléctrico o de los cables que van hacia el conector eléctrico ocasionará daño al detector y puede hacer que éste no funcione.

Continúa...

SIGA ESTOS PASOS DE PROGRESIÓN, Continuación

DETECTORES DE HUMO DE ESTACIÓN ÚNICA SOLAMENTE:
- Si se está instalando una sola unidad, conecte la fuente de alimentación a la caja de empalmes.

DETECTORES INTERCONECTADAS SOLAMENTE:
- **Si usted está interconectando detectores múltiples, relance los pasos de progresión 1-5 para cada detector en la serie. Cuando le acaban, restablezca la potencia al rectángulo de ensambladura.**

¡PELIGRO!

PELIGRO DE DESCARGAS ELÉCTRICAS. No conecte la alimentación hasta haber instalado todas las unidades. Si se conecta la alimentación antes de terminar la instalación, se pueden producir descargas eléctricas que podrían ocasionar graves lesiones e incluso la muerte.

6. Cerciórese de que la unidad está recibiendo alimentación de CA. En condiciones de funcionamiento normal, la luz indicadora de alimentación destellará en forma continua.
7. Si no se enciende el indicador de alimentación, **DESCONECTE LA ALIMENTACIÓN** y vuelva a revisar todas las conexiones. Si no se enciende al volver a conectar la alimentación, la unidad se debe reemplazar inmediatamente.
8. Pueba todos los detectores. Mantenga pulsado el botón de Prueba/Silencio hasta que suenen la alarma. **Si se conecta a varias unidades, cerciórese de que todas las unidades suenen. Cada unidad debe probar en forma individual. Al probar cada una de las unidades, cerciórese de que se activen las alarmas de todas las demás.**

¡PELIGRO!

Si la alarma de alguna unidad no se activa, **APAGUE LA ALIMENTACIÓN** y vuelva a revisar las conexiones. Si la unidad aún no se activa, reemplácela inmediatamente.

Requisitos especiales para los detectores interconectadas del humo

¡ADVERTENCIA!

- **Si no se cumple cualquiera de los requisitos señalados anteriormente, las unidades pueden resultar dañadas y funcionar en forma incorrecta, dejando el hogar sin protección.**
- **Los detectores de humo de CA y de CA/CC se pueden interconectar. Cuando hay atención de CA, todas las alarmas se activarán si una de ellas detecta humo. Cuando se interrumpe la alimentación de CA, sólo las unidades de CA seguirán enviando y recibiendo señales. Los detectores de humo con alimentación exclusiva de CA dejarán de funcionar.**

Las unidades interconectadas advierten de un incendio en forma más oportuna que las unidades autónomas, especialmente si el incendio se origina en un área apartada de la casa. Si una de las unidades detecta humo, sonarán las alarmas de todas las demás. Consulte la tabla para determinar en qué unidad se activó la alarma:

En el detector(es)	El indicador LED rojo destella que activa la alarma rápidamente
En el resto de los detectores	El indicador LED rojo permanece APAGADO

¡IMPORTANTE!

Interconecte las unidades sólo en el interior de una residencia para una sola familia. De lo contrario, podría ocurrir que la alarma de las unidades de la serie, sonarían las alarmas no deseadas en todos los demás hogares. Las unidades interconectadas sólo funcionarán si se cablean a unidades compatibles y se cumplen todos los requisitos.
Detectores de humo *First Alert®* SA4120, SA4121B, SA10OB, 9120 series y detectores de humo *BRK Electronics®* 1005, 4120 series, 9120 series, 7010 series; detectores de calor *BRK Electronics®* HD6135F; HD6135FB; detectores de humo/ CO SC6120B, SC9120B; detector de CO CO5120B; Módulo de Relais RM3 y RM4.

¡ADVERTENCIA!

Las unidades interconectadas deben cumplir CADA UNO de los siguientes requisitos:
- Debe ser posible interconectar un total de 18 unidades. (12 detectores de humo máximo).
- Todas las unidades deben recibir potencia mediante el mismo fusible o cortacircuito.
- El largo total de cable que se utilice para interconectar las unidades debe medir menos de 1000 pies. Este tipo de alambre está comúnmente disponible en los almacenes de la dotación física y de la fuente eléctrica.
- El cableado debe cumplir con todas las normas de electricidad de su localidad y NFPA 70 (NEC). En el NFPA 72, NFPA 101, y/o en las normas locales sobre la seguridad en la construcción encontrará mayor información sobre los requisitos de conexión.

¡IMPORTANTE!

El tiempo de vida nos dependerá de el tipo de detector y de el medio ambiente en donde esté instalado. Todas las baterías especificadas anteriormente son aceptables para uso en este detector. Independientemente de el tiempo que especifique el fabricante, usted debe reemplazar la batería inmediatamente despues que comience el "chirrado" ("advertencia de baja potencia").

Para reemplazar las baterías (sin retirar el detector del cielorraso o la pared):

1. Abra el cajón de las baterías.
2. Presione las pestañas A y B como se muestra en el diagrama y retire cada batería.
3. Inserte las baterías nuevas, asegurándose de que encajen completamente en su compartimiento. Haga coincidir los terminales de los extremos de las baterías con los terminales de la unidad.
4. Cierre el compartimiento de las baterías y luego pruebe la unidad presionando el botón Test/Silence.

CARACTERÍSTICAS OPCIONALES DE BLOQUEO

Los sistemas de cierre están diseñados para impedir el retiro no autorizado de la batería o el detector. No es necesario activar los bloqueos en casas unifamiliares donde no está una preocupación el retiro desautorizado de la batería o del alarmar.

Estos detectores de humo cuentan con dos opciones de bloqueo: uno para trabar el compartimiento de la batería, y la otra para sujetar la unidad al soporte de montaje. Las trabas pueden usarse juntas o en forma independiente.

Herramientas necesarias: • Pinzas con puntas de aguja • Destornillador de cabeza plana estándar
Ambas trabas se accionan con el pasador de aguja para retirar uno o ambos pasadores del soporte de montaje, según la cantidad de trabas que va a utiliza.

¡IMPORTANTE!

Para quitar permanentemente cualquier bloqueo inserte un destornillador de cabeza llana entre el contacto que bloquea y el bloqueo, y alzaprime el contacto fuera del bloqueo.

PARA TRABAR EL COMPARTIMIENTO DE LA BATERÍA

No trabe el compartimiento sin antes haber probado y colocado la batería de respaldo.

1. Mantenga pulsado el botón de Prueba/Silencio en la cubierta del detector de humo hasta que la alarma suene: 3 pitidos, pausa, 3 pitidos, pausa.

¡IMPORTANTE!

Si la alarma no suena durante la prueba, NO trabe el compartimiento, reemplace la batería y vuelva a probar la alarma; si aún así no suena, reemplácelo inmediatamente.

2. Use las pinzas con puntas de aguja y desenganche un pasador de cierre del soporte de montaje.
3. Empuje el perno de cierre a través del orificio que hay cerca del cajón de baterías en la parte trasera del detector de humo.

PARA DESTRABAR EL COMPARTIMIENTO DE LA BATERÍA

¡IMPORTANTE!

Una vez que el detector de humo esté instalado, desconéctelo de la fuente de alimentación de CA antes de destrabar el compartimiento de la batería.

¡PELIGRO!

PELIGRO DE DESCARGAS ELÉCTRICAS. Antes de retirar el detector de humo del soporte de montaje, desconecte la alimentación de la zona donde está instalada la unidad. De lo contrario se pueden producir descargas eléctricas y lesiones graves o mortales.

¡ADVERTENCIA!

Siempre desconecte el circuito de derivación antes de reparar el detector de humo alimentado por CA o CA/CC. Primero apague la alimentación de CA en el cortacircuito o la caja de fusibles. Luego retire la batería de los detectores con respaldo a batería. Finalmente, mantenga pulsado el botón de Prueba/Silencio durante 5 y 10 segundos para descargar el circuito.

1. Retire el detector de humo del soporte de montaje. Si la unidad está trabada al soporte, consulte la sección "Para desactivar la traba" al reverso de esta página.
2. Descubra el pasador de cierre del soporte de montaje y gírelo a fin de retirarlo de la traba del compartimiento de la batería. Guarde el pasador si va a trabar nuevamente el compartimiento).
4. Para volver a trabar el compartimiento, cierre la puerta de éste e introduzca nuevamente el pasador de cierre en la traba.
5. Vuelva a colocar el conector de alimentación en la parte posterior del detector de humo, conecte nuevamente la unidad al soporte de montaje, y encienda la alimentación.

¡IMPORTANTE!

Al reemplazar la batería, siempre pruebe el detector de humo antes de volver a trabar el compartimiento.

Continúa...

(Continuación)

PARA ACTIVAR LA TRABA

1. Use las pinzas con puntas de aguja y desenganche un pasador de cierre del soporte de montaje.

2. Inserte el perno de cierre en el cierre ubicado enfrente del cajón de baterías como se muestra en el diagrama.
3. Al conectarse el detector de humo al soporte de montaje, la cabeza del pasador de cierre quedará por encima de la muesca del soporte.

PARA DESTRABAR LA TRABA

¡PELIGRO!

PELIGRO DE DESCARGAS ELÉCTRICAS. Antes de retirar el detector de humo del soporte de montaje, desconecte la alimentación de la zona donde está instalada la unidad. De lo contrario se pueden producir descargas eléctricas y lesiones graves o mortales.

¡ADVERTENCIA!

Siempre desconecte el circuito de derivación antes de reparar el detector de humo alimentado por CA o CA/CC. Primero apague la alimentación de CA en el cortacircuito o la caja de fusibles. Luego retire la batería de los detectores con respaldo a batería. Finalmente, mantenga pulsado el botón de Prueba/Silencio durante 5 y 10 segundos para descargar el circuito.

1. Introduzca un destornillador de cabeza plana entre el pasador del soporte de montaje y éste último.
2. Para retirar el detector del soporte, haga palanca en la unidad y gírela aproximadamente 12 cm el destornillador en sentido de las manecillas del reloj.

COMPRENSIÓN DE LOS PATRONES DE LUZ Y BOCINA

	Alimentación de CA Todos los Modelos	Alimentación de CC
Funcionamiento normal	El indicador LED verde se enciende constantemente. La alarma audible no suena.	Indicador LED verde apagado. La alarma audible no suena.
Condición de prueba	El indicador LED verde se enciende constantemente. Indicador LED rojo destella rápidamente. Alarma audible.	Indicador LED verde apagado. Indicador LED rojo destella rápidamente. Alarma audible.
Condición de alarma* (detector que activa la alarma)	El indicador LED verde se enciende constantemente. Indicador LED rojo destella rápidamente. Alarma audible	Indicador LED verde apagado. Indicador LED rojo destella rápidamente. Alarma audible.
Modo Silence (silencio)	Indicador LED rojo destella rápidamente.	Indicador LED rojo destella rápidamente.
Bateria baja	Chirrido de alarma aproximadamente una vez por minuto	Chirrido de alarma aproximadamente una vez por minuto
Falla	3 chirridos rápidos por minuto; LED destella aproximadamente una vez por minuto	3 chirridos rápidos por minuto; LED destella aproximadamente una vez por minuto

NOTA: Cuando se aplica la potencia, el unit(s) puede alarmarse momentáneamente.

*Cuando se activa la alarma de un detector de humo en una serie de unidades interconectadas, el indicador LED rojo destellará rápidamente. La luz roja en el resto de los detectores permanecerá APAGADA. Esta característica permite identificar la unidad que activó la alarma.

PRUEBA SEMANAL

¡ADVERTENCIA!

NUNCA pruebe esta unidad con una llama. Puede dañar o incendiar la unidad o la casa. El interruptor incorporado prueba el funcionamiento de la unidad tal como lo exige Underwriters Laboratories Inc. (UL).

- **Si el alarmar no puede siempre ponerse en marcha, reemplácelo inmediatamente. Los productos bajo garantía se reemplazarán por el fabricante para el reemplazo. Vea " garantía limitada " en el extremo de este manual.**

¡PRECAUCIÓN!

No se ubique demasiado cerca de la unidad cuando la alarma esté sonando. El exponerse demasiado cerca a la bocina puede afectar la audición. Al probar la unidad, asegúrese cuando oprimen a sonar la bocina.

Es importante probar esta unidad todas las semanas para cerciorarse de que funcione correctamente. Con el botón de prueba es la manera recomendada de probar este detector. Presione y mantenga el botón de prueba de la cubierta hasta que la alarma suene (la unidad puede continuar alarmando por unos segundos después de que suelte el botón de prueba). Si la unidad no alarma, asegúrese de que esté recibiendo voltaje, y vuelva a probarla. Si continúa sin alarmar, reemplácela inmediamente. **Durante la prueba, usted escuchará un patrón de sonido específico y fuerte de 3 pitidos, pausa, 3 pitidos, pausa.**

Al probar una serie de unidades interconectadas, cada unidad se debe probar en forma individual. Al probar cada una de las unidades, cerciórese de que se activen las alarmas de todas las demás.

MANTENIMIENTO REGULAR

Esta unidad está diseñada para requerir la menor cantidad de mantenimiento posible, sin embargo se deben seguir ciertos procedimientos para que continúe funcionando adecuadamente:

- Pruebe la unidad por lo menos una vez a la semana.
- Limpie el detector de humo por lo menos una vez al mes; aspire delicadamente la cara externa del detector de humo usando el aditamento de cepillo suave de la aspiradora. Pruebe el detector de humo. No utilice nunca agua, limpiadores o solventes, ya que podrían dañar la unidad.
- Si el alarmar de humo se comienza por la suciedad excesiva, el polvo y/o el grime, y no se puede limpiar para evitar alarmar indeseados, reemplazar la unidad inmediatamente.
- Cambie la localización de la unidad si ésta emite alarmas indesedas frecuentes. Encontrará más detalles al respecto en la sección "Lugares donde se debe evitar localizar los detectores de humo".
- Cuando la batería se descarga, la unidad emitirá un "chirrido" una vez por minuto (advertencia de baja potencia). Esta señal dura hasta 7 días, sin embargo, la baterías se debe reemplazar inmediatamente para asegurar una mayor protección.

Cómo elegir una batería de repuesto:
El detector de humo requiere dos baterías "AA" Duracell MN1500. **Estas baterías se venden en tiendas al menudeo.**

¡ADVERTENCIA!

- **Sólo use baterías baterías exactas especificadas por este Manual de Usuario. NO use baterías recargables. Antes de instalar las baterías limpie los contactos de las baterías y también los del aparato. Instale baterías correctamente con cuenta a la polaridad (+ y -).**
- **Por favor, deseche o reciclar adecuadamente las baterías usadas, siguiendo todas las regulaciones locales. Consulte con su autoridad local de manejo de desechos o con el departamento de reciclaje para encontrar un centro de reciclaje de productos electrónicos en su área. NO DESECHE LAS BATERÍAS EN EL FUEGO. LAS BATERÍAS PUEDEN EXPLOTAR O DERRAMARSE.**

¡ADVERTENCIA!

- **Mantenga las baterías fuera del alcance de los niños. En el caso de que una batería sea ingerida, contacte inmediatamente a su centro de toxicología, su médico, o a la línea de emergencia Nacional de Ingestión de Baterias al 202-625-3333 ya que pueden ocurrir daños graves.**

¡IMPORTANTE!

Al silenciar una sola de unidades interconectadas

1. Para silenciar una serie de unidades interconectadas, pulse el botón de Prueba/Silencio en la unidad en la cual se activó la alarma.
2. Una vez que active la función Silence (silencio), el LED rojo continuará destellando rápidamente.
3. Presione el botón Test/Silence (prueba/silencio) cuando esté en silencio para reiniciar el temporizador de silencio.

¡IMPORTANTE!

La característica del silencio en estas unidades puede callar temporalmente un fo indeseado del alarmar por hasta 15 minutos.

¡ADVERTENCIA!

La característica de silencio no desactiva la unidad; la hace temporalmente menos sensible al humo. Como medida de seguridad, si aparecen indicios de humo que detecta la unidad hace suponer que se trata de una situación potencialmente peligrosa, la unidad no se silenciará, o bien volverá a activarse automáticamente. Si no sabe cual es el origen del humo, no piense que se trata de una alarma no deseada. El no actuar rápidamente durante un incendio puede causar daños materiales, lesiones graves, incluso la muerte.

Para silenciar una sola de unidades interconectadas

1. Para silenciar una serie de unidades interconectadas, pulse el botón de Prueba/Silencio en la unidad en la cual se activó la alarma.
2. Una vez que active la función Silence (silencio), el LED rojo continuará destellando rápidamente.
3. Presione el botón Test/Silence (prueba/silencio) cuando esté en silencio para reiniciar el temporizador de silencio.

¡IMPORTANTE!

La característica del silencio en estas unidades puede callar temporalmente un fo indeseado del alarmar por hasta 15 minutos. Para que una característica, presione el botón de Prueba/Silencio en la cubierta. **Si la unidad no silencia y no hay humo pesado presente, o si permanece en modo del silencio continuamente, debe ser substituido inmediatamente.**

SILENCIAMIENTO DE LA ADVERTENCIA DE BATERÍA DESCARGADA

La función de silencio puede acallar automáticamente el "chirrido" de alerta de batería baja por hasta 8 horas. Para activar el silenciar el "chirrido" de advertencia de batería descargada de presionando el botón Test/Silence (Prueba/Silencio) en la tapa de la alarma.

Una vez que se activa la opción de silenciado del "chirrido" de alerta de batería baja, la unidad continúa destellando la luz verde dos veces por minuto durante 8 horas. Después de 8 horas, el "chirrido" de batería baja se reactivará. **¡Reemplace las baterías lo antes posible; esta unidad no funcionará sin baterías cargadas!**

Para desactivar esta característica: Presione el botón Test/Silence (Prueba/Silencio). La unidad pasará al modo de prueba y se reanudará la advertencia de batería descargada (el LED parpadeará y la unidad emitirá un "chirrido" una vez por minuto).

SI SOSPECHA QUE EXISTE UN PROBLEMA

Los detectores de humo no trabajarán adecuadamente si la batería tiene baja potencia, esta obstruido el detector con polvo, cubierto tiera, polvo o grasa, o está instalado en un lugar no adecuado. Limpie el detector como se describe en "Mantenimiento Regular" e instale una batería nueva, luego pruebe el detector. Si no trabaja adecuadamente, reemplácelo de inmediato.

- **Si escucha un "chirrido" aproximadamente una vez por minuto, reemplace las baterías.**
- **Si experimenta alarmas frecuentes que no son de emergencia (como por ejemplo humo proveniente de la cocina o cualquier otra actividad que produzca al cocinar), intente cambiar la localización del detector de humo.**
- **Si la alarma suena cuando no hay humo visible, intente limpiar o cambiar la localización del detector de humo. Es posible que la tapa esté sucia.**
- **Si la unidad no alarma durante la prueba, asegurese de que este recibiendo voltaje CA de la corriente de la casa.**

¡ADVERTENCIA!

Siempre desconecte el circuito de derivación antes de reparar el detector de humo alimentado por CA o CA/CC. Primero apague la alimentación de CA en el cortacircuito o la caja de fusibles. Luego retire la batería de los detectores con respaldo a batería. Finalmente, mantenga pulsado el botón de prueba durante 5 y 10 segundos para descargar el circuito.

¡No intente reparar la unidad por sí mismo, ya que ello anulará la garantía!

Si el detector del humo todavía no está funcionando correctamente, y todavía está bajo garantía, vea por favor "Cómo obtener servicio de la garantía" en limitado de la garantía.

FUNCIONAMIENTO INALÁMBRICO

El uso de la tecnología First Alert® INTERCONECTADO INALÁMBRICA es la manera fácil y económica de brindarle a su familia seguridad integral en el hogar. Todos los detectores INTERCONECTADO INALÁMBRICA e comunican entre sí sin la necesidad de cables o conectores. Cuando un detector suena, todos comienzan a sonar. Esto le alerta rápidamente a su familia sobre potenciales peligros y le da más tiempo de reacción.

La distancia típica de comunicación entre dos alarmas INTERCONECTADO INALÁMBRICA es tipicamente 15 metros (50 pies) en el interior de una vivienda. Algunas características de la vivienda, tales como la cantidad de pisos, la cantidad y el tamaño de los cuartos, el mobiliario y los tipos de materiales de construcción pueden reducir el alcance.
Algunas señales, Se incluyen como ejemplo: Cielos rasos suspendidos, sistemas de conductos, artefactos metálicos grandes (refrigeradores) y travesaños metálicos. Una característica de las alarmas INTERCONECTADO INALÁMBRICA es que actúan como red tipo malla. Todas aquellas repetirán las señales de alarma que reciban a todas las demás alarmas INTERCONECTADO INALÁMBRICA. La interferencia de las condiciones estructurales se puede superar agregando alarmas adicionales para encontrar la señal inalámbrica alrededor de los obstáculos.

¡IMPORTANTE!

- **El rango y capacidad de operación de cualquier dispositivo inalámbrico varíará dependiendo del entorno. Es muy importante que cada detector sea probado individualmente antes y después de la instalación para asegurar que todos los detectores respondan apropiadamente.**
- **Los detectores de humo INTERCONECTADO INALÁMBRICA no son para usar a la intemperie.**
- **o para transmitir entre edificios. Los detectores no se comunican correctamente en estas condiciones.**
- **Los objetos de metal y el empapelado de pared metálico pueden interferir con las señales de los detectores inalámbricos. Los detectores deben ser probados luego de haber introducido cambios en su hogar tales como remodelaciones, traslado de muebles y con puertas metálicas abiertas y cerradas.**

Su detector de humo First Alert® INTERCONECTADO INALÁMBRICA le comunicará automáticamente cualquier posibilidad de incendio a todos los demás detectores de humo First Alert® INTERCONECTADO INALÁMBRICA.

¡PRECAUCIÓN!

Cualquier cambio o modificación que no estuviera expresamente aprobado por BRK Brands, Inc. podría invalidar la autorización del usuario para operar el equipo.

SI SE ACTIVA LA ALARMA CÓMO PROCEDER EN CASO DE ALARMA

**Durante una alarma, usted escuchará un patr